TERASAKI
Innovators in Protection Technology

TemBreak2 & TemBreak

The Ultimate Safety Breaker

Molded Case Circuit Breaker

TERASAKI ELECTRIC CO., LTD.
www.terasaki.co.jp

Catalogue No.'17-I65E

⚠ **Safety Notice**
Carefully read instruction manual to ensure proper installation, connection, operation, handling and maintenance of the product.

TABLE OF CONTENTS

Product Warranty for Molded Case Circuit Breakers/Earth Leakage Circuit Breakers

Warranty Period

Products are warranted for a period of one (1) year from the date of purchase. However, if the date of purchase is unknown, products are warranted for a period of eighteen (18) months from the date of manufacture.

Warranty Scope

(1) Terasaki shall service products that incur trouble within the warranty period or shall replace them with new products free-of-charge, provided the products were properly used in a state, method and environment compliant with conditions and precautions specified in our catalogs, manuals and product warning plates.

(2) Servicing shall be subject to billing even within the warranty period in the following cases:
Trouble caused by improper or careless storage or handling;
Trouble caused by improper installation;
Trouble caused by improper use or unauthorized remodeling;
Trouble caused by external factors including fire and abnormal voltage, or force majeure including earthquakes, storms, flooding or other natural disaster; or
Trouble caused by technically or scientifically unforeseeable events at the time of delivery.

(3) "Warranty" as it used here applies strictly to the delivered product itself and excludes from compensation any and all damages induced by trouble with the delivered product.

Safety Notices

Before installing, using, or servicing products, read these "Safety Notices" and familiarize yourself with all aspects of products, safety information and precautions.

⚠Warning	A warning notice with this symbol indicates that neglecting the suggested procedure or practice could result in lethal or serious personal injury.
⚠Caution	A caution notice with this symbol indicates that neglecting the suggested procedure or practice could result in moderate or slight personal injury and/or property damage.

■Mounting Precautions

⚠Caution

- Electrical work should only be undertaken by suitably qualified persons.
- Do not place the product in an area that is subject to high temperature, high humidity, excessive dusty air, corrosive gas, strong vibration and shock, or other unusual conditions. Mounting in such areas could cause a fire or malfunction.
- Be careful to prevent foreign objects (debris, concrete powder, iron powder, etc.) and rainwater from entering product. These materials inside the product could cause a fire or malfunction.
- Prior to commencing any work on the product, open an upstream circuit breaker or isolator to ensure that no voltage is applied to the product. Otherwise, electrical shock may result.
- Observe proper connection; do not confuse line and load end for the circuit exceeding 240V. Reverse connection may cause a fire or malfunction.
- For 4-pole breakers, be sure to connect a neutral conductor to the N pole. Otherwise, an over-current may hinder the product from tripping, thus resulting in a fire.
- When connecting cable or busbar to the product, tighten terminal screws to the torque specified in this manual. Otherwise, a fire could result.
- Even when tightening the terminal screws and after conductor connection, do not apply excessive force to the terminals. Otherwise, a fire may result.
- For front-connected breakers, Insulate all bare conductors of the line side until the breaker end. If interpole barriers are packed, be sure to use the barriers; moreover, insulate all bare conductors by insulating tape or the like so that the tape overlaps with the barriers. Insufficient insulation may result in short-circuit.

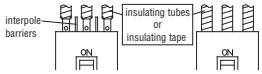

- Do not block the arc gas vents of the product to ensure adequate arc space. Blocking these vents could result in failure of circuit interruption.

[Earth Leakeage Circuit Breaker]

- When using a 3-pole breaker in a single -phase 2-wire circuit, connect the power source to the right and left poles. Do not connect it to the central pole.Otherwise, the earth leakage tripping function will be inoperative.
- Using the test button, check the breaker for normal operation.Proceed as follows: After proper connection, move the handle to the |(ON) position and then (while applying voltage to the breaker) press the test button.The breaker will trip open.If pressing the test button for 2 or 3 seconds does not cause the breaker to trip open, the breaker is out of order. Please contact your local agent or our branch office immediately.

■Handling Precautions

⚠Warning

- Never touch terminals. Otherwise, electric shock may result.
- The earth leakage circuit breaker trips open just when the difference between outgoing current and incoming current exceeds a specified value. Never touch two or more bare live parts simultaneously.The breaker does not respond to electric shock.

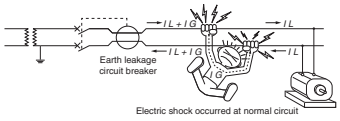

⚠Caution

- When the breaker trips open automatically, remove the cause, then return the handle to the |(ON) position. Should a fault be interrupted, the breaker must be inspected. Otherwise, a fire may result.

[Earth Leakeage Circuit Breaker]

- Be sure to connect the earth terminal of a load device to ground.
- Check the breaker for normal operation by pressing the test button once per month. If pressing the test button for 2 or 3 seconds does not cause the breaker to trip open, the breaker is out of order. Replace it by new one.

■Maintenance Precautions

⚠Caution

- Service and/or inspection of the product must be done by persons having expert knowledge.
- Before servicing or inspecting the product, open an upstream circuit breaker or the like to isolate all sources of power. Otherwise, electric shock may result.
- Regularly check that the breaker terminal screws are tightened to torque values shown within this manual, failure to do so may result in fire.

When placing orders

(1) Products and specifications appearing in this catalog are subject to change (including discontinued sales) due to product improvements and other reasons, therefore contact us or your local dealer prior to using, considering or ordering the shown products to confirm that the information in this catalog is the up-to-date.

(2) If considering the shown products for applications where they may be used outside of the scope of specifications and conditions of use listed in this catalog, applications under conditions or environments not specifically described in this catalog, applications that especially require safety and high reliability such as safety devices or control systems for nuclear power plants, railroads, aircrafts, automobiles and medical equipment, or other applications that can potentially have a serious impact on human life or property, contact us and determine the adequacy of products for the intended application via specifications, etc.

1 General

Approvals by ship classification societies

NK	NIPPON KAIJI KYOKAI
LR	Lloyd's Register of Shipping
ABS	The American Bureau of Shipping
GL	Germanischer Lloyd
BV	Bureau Veritas
CCS	China Classification Society
KR	Korean Register of Shipping
RINA	Registro Italiano Navale

Based Standards

IEC 60947-2	International Electrotechnical Commission
EN 60947-2	European Standard

Safety Breaker

Isolation capability

The isolation capability means that, as long as the main contact is closed, the toggle is not in the OFF position and cannot be locked at the OFF position.
The toggle being in the OFF position hence shows the main contact is open and personnel are not exposed to electrical shock hazard when working in the load side.

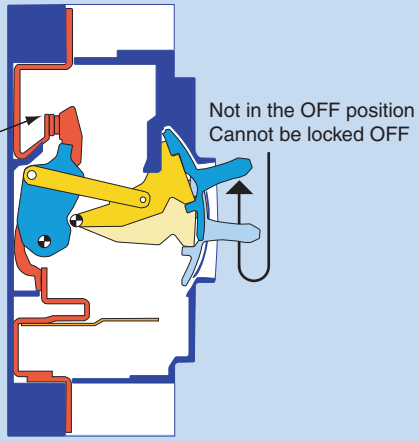

Direct Opening Action

Under the heading “Measures to minimize the risk in the event of failure”, IEC 60204-1 Safety of Machinery-Electrical Equipment of Machinery includes the following recommendation:
“-the use of switching devices having positive (or direct) opening operation.”

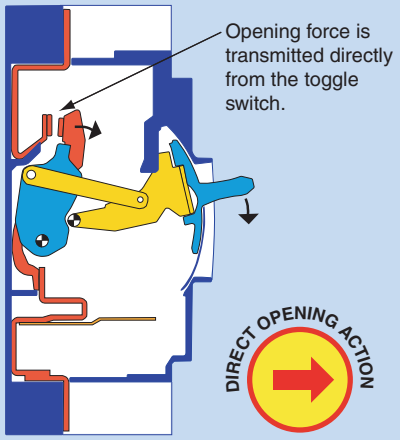

Safety lock for Plug-in versions

There are three plug-in types available according to applications,

[For switchboards]

■Standard type
Suitable for angle-mounted or rear-connected application

■High-performance type
Suitable for angle-mounted, front panel-mounted or rear panel-mounted application. The plug-in MCCB is locked to the base when the toggle is ON. It cannot be removed unless the toggle is OFF or TRIPPED. The safety lock prevents a trip occurring as the MCCB is being removed from the base.

[For distribution boards]
Suitable for front-connected application where the breaker depth is smaller than for switchboards

Enhanced Insulation

The risk of touching live parts has been minimized by design.
If the toggle is broken by accident or misuse, no live part is exposed.

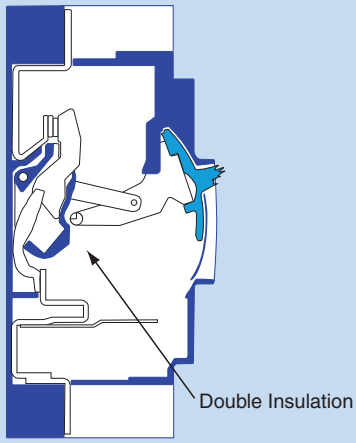

Rated service short-circuit breaking capacity (I_{cs})

The rated service short-circuit breaking capacity (I_{cs}) is the maximum short-circuit current defined by IEC 60947-2 which a circuit breaker can break in accordance with a sequence of opening and closing operations (O-CO-CO).
TemBreak2 has greatly been improved in its rated service short-circuit capacity, thereby providing more safety.

[225AF Standard series]

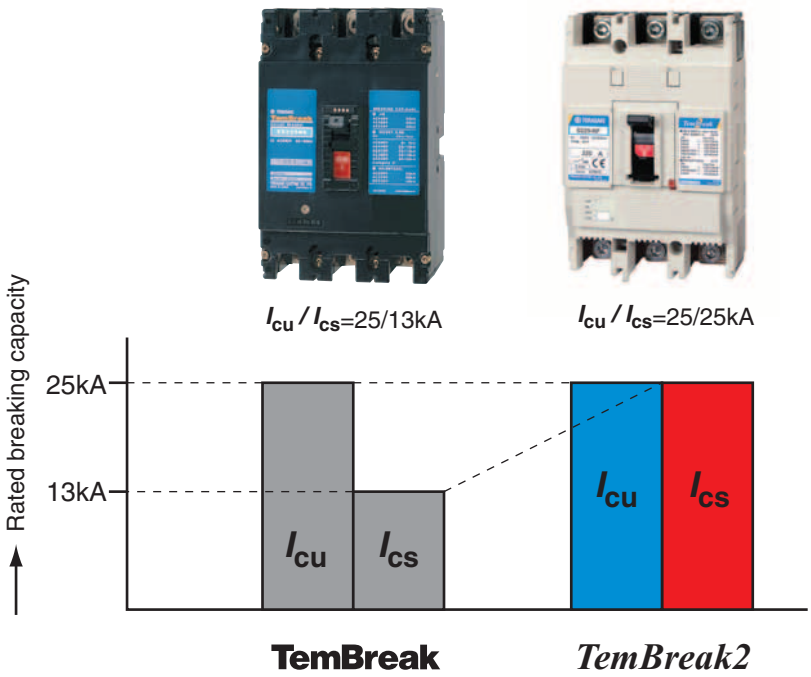

Smaller size and higher breaking capacity, allowing a downsizing of switchboards

TemBreak2 current limiting breakers are reduced in size to at least one-half and enhanced in breaking capacity.

• **Smaller in size than existing models**

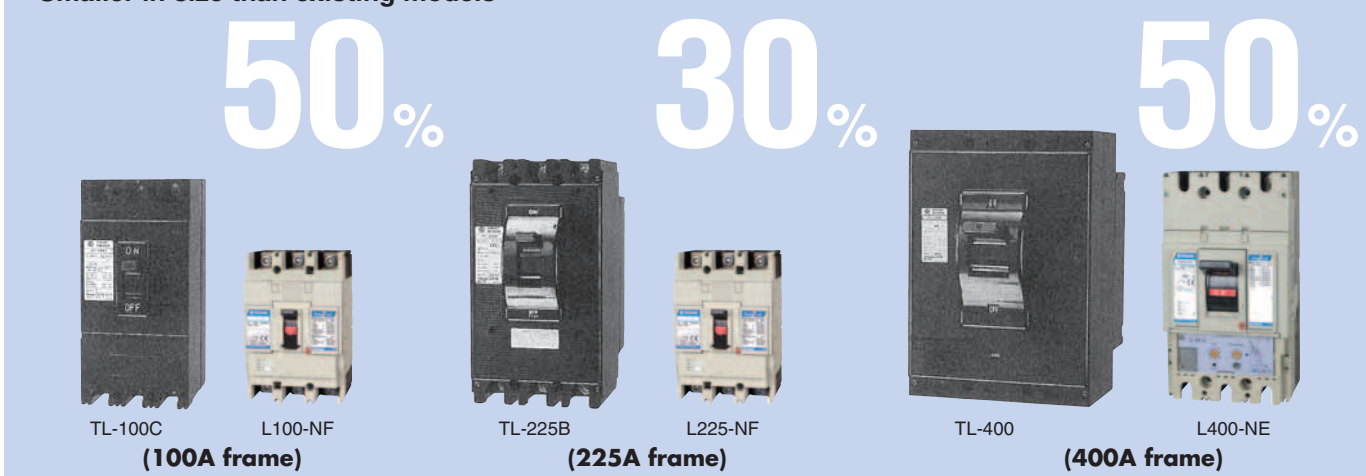

Selection Chart

Molded Case Circuit Breakers	Frame size (A) 30	50	100	125	225	250	400
Economical series		E50-SF 10kA/5kA	E100-SF 10kA/5kA			E250-SF 15kA/12kA	
Standard series							S400-CF 30kA/30kA
		S50-SF 25kA/13kA		S125-SF 25kA/13kA		S250-SF 30kA/15kA	S400-NF 45kA/45kA
			S100-NF 25kA/25kA	S125-NF 25kA/25kA	S225-NF 25kA/25kA	S250-NF 25kA/25kA	Electronic S400-NE 45kA/45kA
High-fault level series		S50-GF 50kA/25kA	S100-GF 50kA/25kA	S125-GF 50kA/25kA	S225-GF 50kA/25kA	S250-GF 50kA/25kA	S400-GF 65kA/50kA
					Electronic S225-GE 50kA/25kA		Electronic S400-GE 65kA/50kA
							S400-PF 80kA/80kA
							Electronic S400-PE 80kA/80kA
Current limiting series: Standard series							
			H100-NF 120kA/80kA	H125-NF 120kA/80kA	H225-NF 120kA/80kA		Electronic H400-NE 120kA/80kA
Current limiting series: High-fault level series			L100-NF 180kA/135kA	L125-NF 180kA/135kA	L225-NF 180kA/135kA		Electronic L400-NE 180kA/135kA
Motor protection series		E50-CM 2.5kA/1.3kA	S100-NM 25kA/25kA		S225-NM 25kA/25kA		
Non-automatic trip breakers							
Switch-disconnectors				S125-SN		S250-SN	
			S100-NN	S125-NN			S400-NN
TB series for distribution boards		④ TB-5S 5kA/-					
		④ TB-5P 5kA/-					
		④ TB-5D 5kA/-					

Notes: ① For breaking capacity, see pages 2-2 to 2-15
② For AC500V
③ For AC460V
④ For AC250V

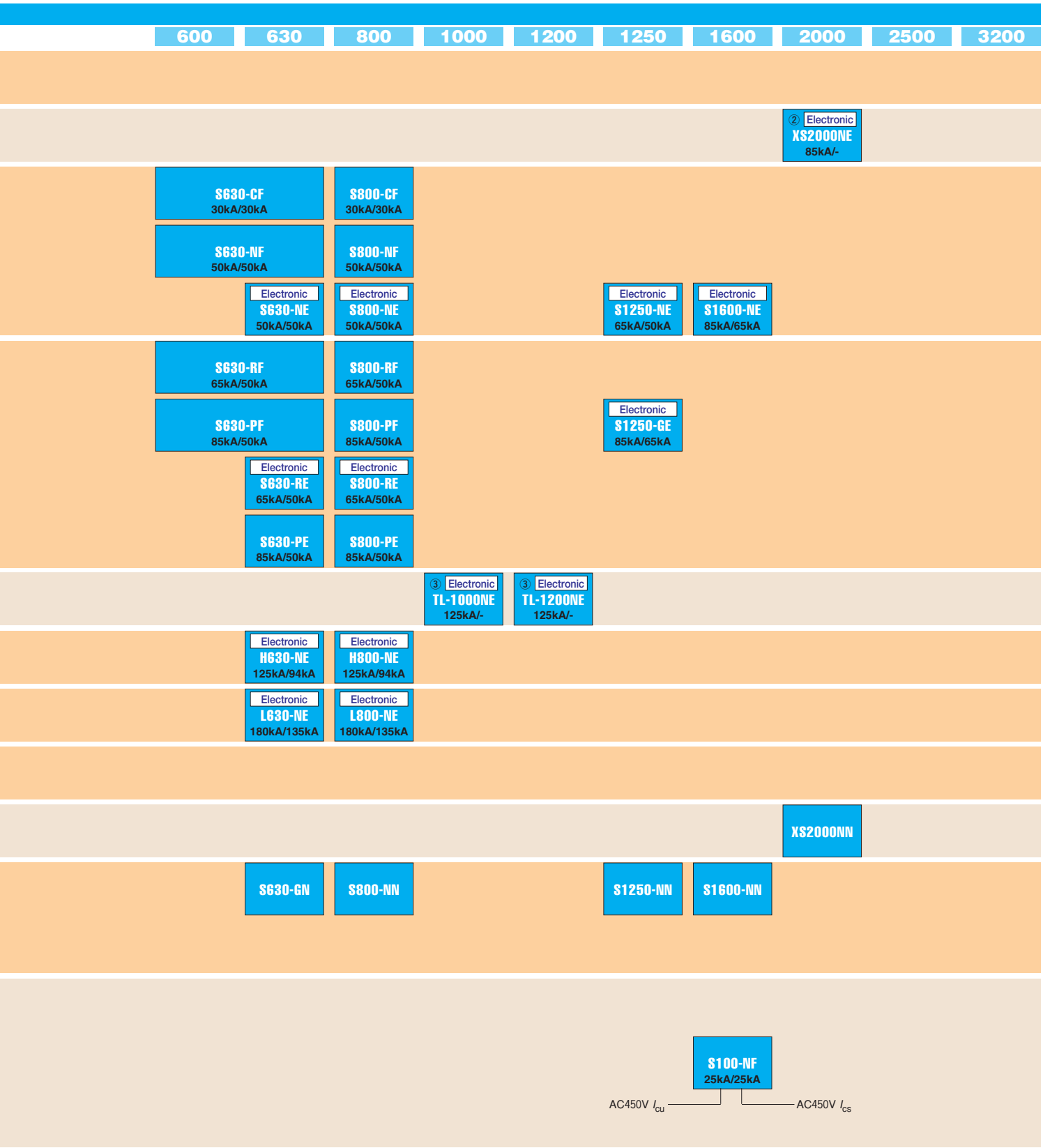
600
630
800
1000
1200
1250
1600
2000
2500
3200
② Electronic
XS2000NE
85kA/-
S630-CF
30kA/30kA
S800-CF
30kA/30kA
S630-NF
50kA/50kA
S800-NF
50kA/50kA
Electronic
S630-NE
50kA/50kA
Electronic
S800-NE
50kA/50kA
Electronic
S1250-NE
65kA/50kA
Electronic
S1600-NE
85kA/65kA
S630-RF
65kA/50kA
S800-RF
65kA/50kA
S630-PF
85kA/50kA
S800-PF
85kA/50kA
Electronic
S1250-GE
85kA/65kA
Electronic
S630-RE
65kA/50kA
Electronic
S800-RE
65kA/50kA
S630-PE
85kA/50kA
S800-PE
85kA/50kA
③ Electronic
TL-1000NE
125kA/-
③ Electronic
TL-1200NE
125kA/-
Electronic
H630-NE
125kA/94kA
Electronic
H800-NE
125kA/94kA
Electronic
L630-NE
180kA/135kA
Electronic
L800-NE
180kA/135kA
XS2000NN
S630-GN
S800-NN
S1250-NN
S1600-NN
S100-NF
25kA/25kA
AC450V I_{cu}
AC450V I_{cs}

2 Ratings and Specifications

Molded Case Circuit Breakers

2 Ratings and Specifications

Molded Case Circuit Breakers

1 Economical series

Frame size (A)	50		100		250			
Type	**E50-SF**		**E100-SF**		**E250-SF**			
Number of poles	2	3	2	3	2＊	3	2＊	3
■Ratings								
Rated current, A	10 40		10 40 100		125		250	
Calibrated at 45°C	15 50		15 50		150			
	20		20 60		175			
	30		30 75		200			
					225			

＊2 poles breakers use the terminals of both ends of 3 poles breakers.

Rated insulation voltage〔U_i〕 V	690		690		690		690	
Rated impulse withstand voltage〔U_{imp}〕 kV	6		6		8		8	
■Rated breaking capacity, kA								
NK AC 690V	—		—		—		—	
I_{cu}/I_{cs}(sym) 450V	10/— ⑬		10/— ⑬		15/12		15/12	
240V	25/— ⑭		25/— ⑭		35/27		35/27	
① DC 250V	7.5/— ㉗		7.5/— ㉗		—		—	
IEC60947-2 AC 690V	—		—		—		—	
I_{cu}/I_{cs}(sym) 500V	7.5/3.8		7.5/3.8		10/7.5		10/7.5	
440V	10/5		10/5		15/12		15/12	
415V	10/5		10/5		25/19		25/19	
380V	16/8		16/8		25/19		25/19	
240V	25/13		25/13		35/27		35/27	
① DC 250V	7.5/3.8 ㉗		7.5/3.8 ㉗		15/12		15/12	
125V	15/7.5 ㉗		15/7.5 ㉗		25/19		25/19	
■Rated short time withstand current, kA	—		—		—		—	
■External dimensions, mm								
a	50	75	50	75	105	105	105	105
b	130		130		165		165	
c	68		68		68		68	
d	87		87		95		95	
Weight (◉ marked standard type) kg	0.48	0.74	0.48	0.74	1.5	1.5	1.5	1.5
■Connections and Mountings								
Front-connected (FC) Terminal screws	◉		◉		◉		◉	
With extension bars	—		—		○ ㊸		○ ㊸	
Rear-connected (RC) Bolt studs	○		○		—		—	
Flat bar studs	—		—		○		○	
Plug-in (PM) For switchboards Standard (PMC)	○		○		—	○	—	○
High-performance (PMB)	—		—		—		—	
For distribution boards (PMC)	○		○		—		—	
Flush-mounted (FP) Bolt studs	○		○		—		—	
Flat bar studs	—		—		○		○	
Draw-out type (DR)	—		—		—		—	
TemPlug70 (PG)	—		—		—	○	—	○
TemPlug45B (PG4)	—		—		—		—	
DIN rail mount	—		—		—		—	
Clip-in chassis mount	—		—		—		—	
■Accessories (optional) **Symbol**								
Internally mounted: Auxiliary switch A X	●		●		●		●	
Alarm switch A L	●		●		●		●	
Shunt trips S H	●		●		●		●	
Undervoltage trips U V	● ⑥		● ⑥		●		●	
Externally mounted: Motor operator M C	—	●	—	●	●		●	
External operating handle: Breaker-mounted H B	—	●	—	●	●		●	
Door-mounted (variable depth) H P	—	●	—	●	●		●	
Toggle extension H A	—		—		—		—	
Mechanical interlock Slide type M S	—	●	—	●	●		●	
Toggle holder H H	●		●		●		●	
Toggle lock H L	●		●		●		●	
Terminal cover: For front-connected C F	●		●		●		●	
For rear-connected and plug-in C R	●		●		●		●	
Interpole barrier B A	●		●		● ③		● ③	
Terminal block for lead T F	●		●		●		●	
Door flange D F	●		●		●		●	
■Standard specifications								
Overcurrent trip mechanism	Thermal-magnetic ⑦		Thermal-magnetic ⑦		Thermal-magnetic		Thermal-magnetic	
Trip button (color)	Yes (Red)		Yes (Red)		Yes (Red)		Yes (Red)	
Handle position indication (ON: Red, OFF: Green)	Yes		Yes		Yes		Yes	
Suitability for isolation	Non		Non		Yes		Yes	
CE marking	Non		Non		Yes		Yes	
Page on which characteristics and outline dimensions are shown	7-2		7-4		7-16		7-16	

Notes:

◉ : Standard. This configuration used unless otherwise specified. ○ : Optional standard. Specify when ordering. ● : "yes" or "available". — : "no" or "not available".

① : DC rating available on request. ③ : Line side interpole barriers are supplied as standard. (Front connection only)

⑥ : The UVT controller is installed externally, when provided with AC UVT. ⑦ : Hydraulic-magnetic type for below 10A rating. ⑬ : at 500V AC. ⑭ : at 250V AC.

㉗ : Applicable to only 2 poles breakers. ㊸ : For the extension bars, please palce the order separately in parts.

Molded Case Circuit Breakers

2 Standard series

Frame size (A)	50	100	125	125	225	250	
Type	**S50-SF**	**S100-NF**	**S125-SF**	**S125-NF**	**S225-NF**	**S250-SF**	
Number of poles	2 3	2 3 4	2 3 4	2 3 4	2∗ 3 4	2∗ 3 4	2∗ 3 4
■Ratings							
Rated current, A	15	15 50	15 50	125	125 200	125	250
Calibrated at 45°C	20	20 60	20 60		150 225	150	
	30	30 75	30 75		175	175	
	40	40 100	40 100			200	
	50					225	
∗2 poles breakers use the terminals of both ends of 3 poles breakers.							
Rated insulation voltage〔U_i〕 V	690	690	690	690	690	690	690
Rated impulse withstand voltage〔U_{imp}〕 kV	8	8	8	8	8	8	8
■Rated breaking capacity, kA							
NK AC 690V	—	6/6	—	—	6/6	7.5/7.5	—	—
I_{cu}/I_{cs}(sym) 450V	25/13	25/25	25/13	25/13	25/25	25/25	30/15	30/15
240V	50/25	50/50	50/25	50/25	50/50	65/65	85/43	85/43
① DC 250V	25/13 ㉗	25/19 ㉗	25/13 ㉗	25/13 ㉗	25/19 ㉗	40/40	25/13	25/13
IEC60947-2 AC 690V	6/3	6/6	6/3	6/3	6/6	7.5/7.5	4/4	4/4
I_{cu}/I_{cs}(sym) 500V	12/6	22/22	12/6	12/6	22/22	25/25	25/13	25/13
440V	25/13	25/25	25/13	25/13	25/25	25/25	30/15	30/15
415V	30/15	30/30	30/15	30/15	30/30	35/35	40/20	40/20
380V	30/15	30/30	30/15	30/15	30/30	35/35	40/20	40/20
240V	50/25	50/50	50/25	50/25	50/50	65/65	85/43	85/43
① DC 250V	25/13 ㉗	25/19 ㉗	25/13 ㉗	25/13 ㉗	25/19 ㉗	40/40	25/13	25/13
125V	40/20 ㉗	40/30 ㉗	40/20 ㉗	40/20 ㉗	40/30 ㉗	40/40	40/20	40/20
■Rated short time withstand current, kA	—	—	—	—	—	—	—	—
■External dimensions, mm								
a	50 75	60 90 120	50 75 100	50 75 100	60 90 120	105 105 140	105 105 140	105 105 140
b	130	155	130	130	155	165	165	165
c	68	68	68	68	68	68	68	68
d	95	92	95	95	92	92	95	95
Weight (◉ marked standard type) kg	0.6 0.8	0.7 1.1 1.4	0.6 0.8 1.0	0.6 0.8 1.0	0.7 1.1 1.4	1.5 1.5 1.9	1.5 1.5 1.9	1.5 1.5 1.9
■Connections and Mountings								
Front-connected (FC) Terminal screws	◉	◉	◉	◉	◉	◉	◉	◉
With extension bars	○ ㊸	○ ㊸	○ ㊸	○ ㊸	○ ㊸	○ ㊸	○ ㊸	○ ㊸
Rear-connected (RC) Bolt studs	—	—	—	—	—	—	—	—
Flat bar studs	○	○	○	○	○	○	○	○
Plug-in (PM) For switchboards Standard (PMC)	— ○	— ○ —	— ○ —	— ○ —	— ○ —	— ○ —	— ○ —	— ○ —
High-performance (PMB)	—	○	—	—	○	○	—	—
For distribution boards (PMC)	○ ㊽	— ○ —	○ ㊽ —	○ ㊽ —	— ○ —	—	—	—
Flush-mounted (FP) With flat bar studs	○	○	○ —	○ —	○	○	○	○
Draw-out type (DR)	—	—	—	—	—	—	—	—
TemPlug70 (PG)	—	○ ○ —	—	—	○ ○ —	— ○ —	— ○ —	— ○ —
TemPlug45B (PG4)	—	—	—	—	—	—	—	—
DIN rail mount	— ○ ⑪	— ○ ⑪	— ○ ⑪	— ○ ⑪	— ○ ⑪	—	—	—
Clip-in chassis mount	—	—	—	—	—	—	—	—
■Accessories (optional) Symbol								
Internally mounted: Auxiliary switch A X	●	●	●	●	●	●	●	●
Alarm switch A L	●	●	●	●	●	●	●	●
Shunt trips S H	●	●	●	●	●	●	●	●
Undervoltage trips U V	●	●	●	●	●	●	●	●
Externally mounted: Motor operator M C	—	— ●	—	—	— ●	●	●	●
External operating handle Breaker-mounted H B	— ●	— ●	— ●	— ●	— ●	●	●	●
Door-mounted (variable depth) H P	— ●	— ●	— ●	— ●	— ●	●	●	●
Toggle extension H A	—	—	—	—	—	—	—	—
Mechanical interlock Slide type M S	— ●	— ●	— ●	— ●	— ●	●	●	●
Toggle holder H H	●	●	●	●	●	●	●	●
Toggle lock H L	●	●	●	●	●	●	●	●
Terminal cover For front-connected C F	●	●	●	●	●	●	●	●
For rear-connected and plug-in C R	●	●	●	●	●	●	●	●
Interpole barrier B A	● ③	● ③	● ③	● ③	● ③	● ③	● ③	● ③
Terminal block for lead T F	●	●	●	●	●	●	●	●
Door flange D F	●	●	●	●	●	●	●	●
■Standard specifications								
Overcurrent trip mechanism	Thermal-magnetic	Thermal-magnetic	Thermal-magnetic	Thermal-magnetic	Thermal-magnetic	Thermal-magnetic	Thermal-magnetic	Thermal-magnetic
Trip button (color)	Yes (Red)	Yes (Red)	Yes (Red)	Yes (Red)	Yes (Red)	Yes (Red)	Yes (Red)	Yes (Red)
Handle position indication (ON: Red, OFF: Green)	Yes	Yes	Yes	Yes	Yes	Yes	Yes	Yes
Suitability for isolation	Yes	Yes	Yes	Yes	Yes	Yes	Yes	Yes
CE marking	Yes	Yes	Yes	Yes	Yes	Yes	Yes	Yes
Page on which characteristics and outline dimensions are shown	7-6	7-10	7-8	7-8	7-12	7-14	7-16	7-16

Notes:

◉ : Standard. This configuration used unless otherwise specified. ○ : Optional standard. Specify when ordering. ● : "yes" or "available". — : "no" or "not available".

① : DC rating available on request. ③ : Line side interpole barriers are supplied as standard. (Front connection only)

⑥ : The UVT controller is installed externally, when provided with AC UVT. ⑦ : Hydraulic-magnetic type for below 10A rating. ⑪ : Provided with DIN rail adaptor.

㉗ : Applicable to only 2 poles breakers. ㊸ : For the extension bars, please palce the order separately in parts. ㊽ : Specify PMD when the internal accessories are fitted.

Frame size (A)	250	400	400	400	600	630	600	630
Type	**S250-NF**	**S400-CF**	**S400-NF**	**S400-NE**	**S630-CF**		**S630-NF**	
Number of poles	2＊ 3 4	3 4	3 4	3 4	3 4	3 4	3 4	3 4
■Ratings								
Rated current, A	250	125 250	125 250	(Adjustable) (Adjustable)	500	630	500	630
Calibrated at 45°C		150 300	150 300	125 175	600		600	
		175 350	175 350	150 200				
		200 400	200 400	175 225				
		225	225	200 250				
				225 300				
				350				
＊2 poles breakers use the terminals of both ends of 3 poles breakers.				400				
Rated insulation voltage〔U_i〕 V	690	690	690	690	690	690	690	690
Rated impulse withstand voltage〔U_{imp}〕 kV	8	8	8	8	8	8	8	8
■Rated breaking capacity, kA								
NK AC 690V	7.5/7.5	15/15	20/15	20/15	10/10	10/10	20/20	20/20
I_{cu}/I_{cs}(sym) 450V	25/25	30/30	45/45	45/45	30/30	30/30	50/50	50/50
240V	65/65	50/50	85/85	85/85	50/50	50/50	85/85	85/85
① DC 250V	40/40	40/40	—	—	—	—	—	—
IEC60947-2 AC 690V	7.5/7.5	15/15	20/15	20/15	10/10	10/10	20/20	20/20
I_{cu}/I_{cs}(sym) 500V	25/25	22/22	30/30	30/30	15/15	15/15	30/30	30/30
440V	25/25	30/30	45/45	45/45	30/30	30/30	50/50	50/50
415V	35/35	36/36	50/50	50/50	36/36	36/36	50/50	50/50
380V	35/35	36/36	50/50	50/50	36/36	36/36	50/50	50/50
240V	65/65	50/50	85/85	85/85	50/50	50/50	85/85	85/85
① DC 250V	40/40	40/40	40/40	—	50/50	50/50	50/50	50/50
125V	40/40	40/40	40/40	—	50/50	50/50	50/50	50/50
■Rated short time withstand current, kA	—	—	—	5 (0.3sec)	—	—	—	—
■External dimensions, mm								
a	105 105 140	140 185	140 185	140 185	210 280	210 280	210 280	210 280
b	165	260	260	260	273	273	273	273
c	68	103	103	103	103	103	103	103
d	92	145	145	145	145	145	145	145
Weight (◉ marked standard type) kg	1.5 1.5 1.9	4.2 5.6	4.2 5.6	4.3 5.7	8.0 11.0	8.0 11.0	8.0 11.0	8.0 11.0
■Connections and Mountings								
Front-connected (FC) Terminal screws	◉	◉	◉	◉	—	—	—	—
With extension bars	○ ㊸	○ (BAR)	○ (BAR)	○ (BAR)	◉	◉	◉	◉
Rear-connected (RC) Bolt studs	—	—	—	—	—	—	—	—
Flat bar studs	○	○	○	○	○	○	○	○
Plug-in (PM) For switchboards Standard (PMC)	— ○ —	○ —	○ —	○ —	○ —	○ —	○ —	○ —
High-performance (PMB)	○	○	○	○	○	○	○	○
For distribution boards (PMC)	—	—	—	—	—	—	—	—
Flush-mounted (FP) With flat bar studs	○	○	○	○	○	○	○	○
Draw-out type (DR)	—	▲	▲	▲	▲	▲	▲	▲
TemPlug70 (PG)	— ○ —	○ —	○ —	○ —	○ —	○ —	○ —	○ —
TemPlug45B (PG4)	—	—	—	—	—	—	—	—
DIN rail mount	—	—	—	—	—	—	—	—
Clip-in chassis mount	—	—	—	—	—	—	—	—
■Accessories (optional) **Symbol**								
Internally mounted: Auxiliary switch A X	●	●	●	●	●	●	●	●
Alarm switch A L	●	●	●	●	●	●	●	●
Shunt trips S H	●	●	●	●	●	●	●	●
Undervoltage trips U V	●	●	●	●	●	●	●	●
Externally mounted: Motor operator M C	●	●	●	●	●	●	●	●
External operating handle Breaker-mounted H B	●	●	●	●	●	●	●	●
Door-mounted (variable depth) H P	●	●	●	●	●	●	●	●
Toggle extension ⑨ H A	—	●	●	●	●	●	●	●
Mechanical interlock ⑨ Slide type M S	●	●	●	●	●	●	●	●
Toggle holder ⑨ H H	●	●	●	●	●	●	●	●
Toggle lock ⑨ H L	●							
Terminal cover For front-connected ⑨ C F	●	●	●	●	●	●	●	●
For rear-connected and plug-in C R	●	●	●	●	●	●	●	●
Interpole barrier ⑨ B A	● ③	● ③	● ③	● ③	● ③	● ③	● ③	● ③
Terminal block for lead ⑨ T F	●	●	●	●	●	●	●	●
Door flange ⑨ D F	●	●	●	●	●	●	●	●
■Standard specifications								
Overcurrent trip mechanism	Thermal-magnetic	Thermal-magnetic	Thermal-magnetic	Electronic ⑯	Thermal-magnetic(adjustable)	Thermal-magnetic(adjustable)	Thermal-magnetic(adjustable)	Thermal-magnetic(adjustable)
Trip button (color)	Yes (Red)	Yes (Red)	Yes (Red)	Yes (Red)	Yes (Red)	Yes (Red)	Yes (Red)	Yes (Red)
Handle position indication (ON: Red, OFF: Green)	Yes	Yes	Yes	Yes	Yes	Yes	Yes	Yes
Suitability for isolation	Yes	Yes	Yes	Yes	Yes	Yes	Yes	Yes
CE marking	Yes	Yes	Yes	Yes	Yes	Yes	Yes	Yes
Page on which characteristics and outline dimensions are shown	7-18	7-20	7-20	7-30	7-34	7-34	7-34	7-34

Notes:
◉ : Standard. This configuration used unless otherwise specified. ○ : Optional standard. Specify when ordering. ▲ : Semi-standard. ● : "yes" or "available". — : "no" or "not available".
① : DC rating available on request. ③ : Line side interpole barriers are supplied as standard. (Front connection only) ⑨ : Not applicable to the draw-out type (DR).
⑯ : Optional pretrip alarm or ground fault trip function available on request. ㊸ : For the extension bars, please palce the order separately in parts.

																	TemBreak	
Frame size (A)			630		800		800		800		1250		1600		2000			
Type			**S630-NE**		**S800-CF**		**S800-NF**		**S800-NE**		**S1250-NE**		**S1600-NE**		**XS2000NE**			
Number of poles			3	4	3	4	3	4	3	4	3	4	3	4	3	4		
■Ratings																		
Rated current, A			(Adjustable)		700		700		(Adjustable)		(Adjustable)		(Adjustable)		(Adjustable)			
Calibrated at 45°C			250	500	800		800		350	600	500	1000	700	1200	1000	1600		
			300	600					400	700	600	1200	800	1400	1200	1800		
			350	630					450	800	700	1250	900	1600	1400	2000		
			400						500		800		1000					
Rated insulation voltage〔U_i〕 V			690		690		690		690		690		690		690			
Rated impulse withstand voltage〔U_{imp}〕 kV			8		8		8		8		8		8		8			
■Rated breaking capacity, kA																		
NK	AC	690V	20/20		10/10		20/20		20/20		25/20		—		—			
I_{cu}/I_{cs}(sym)		450V	50/50		30/30		50/50		50/50		65/50		—		85/— ⑬			
		240V	85/85		50/50		85/85		85/85		100/75		—		—			
	① DC	250V	—		—		—		—		—		—		—			
IEC60947-2	AC	690V	20/20		10/10		20/20		20/20		25/20		45/34		45/42			
I_{cu}/I_{cs}(sym)		500V	30/30		15/15		30/30		30/30		45/34		65/50		65/50			
		440V	50/50		30/30		50/50		50/50		65/50		85/65		85/65			
		415V	50/50		36/36		50/50		50/50		70/50		85/65		85/65			
		380V	50/50		36/36		50/50		50/50		85/65		100/75		100/75			
		240V	85/85		50/50		85/85		85/85		100/75		125/94		125/94			
	① DC	250V	—		50/50		50/50		—		—		—		—			
		125V	—		50/50		50/50		—		—		—		—			
■Rated short time withstand current, kA			10 (0.3sec)		—		—		10 (0.3sec)		15 (0.3sec)		20 (0.3sec)		42 (0.3sec)			
■External dimensions, mm																		
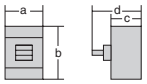		a	210	280	210	280	210	280	210	280	210	280	210	280	320	429		
		b	273		273		273		273		370		370		450			
		c	103		103		103		103		120		140		185			
		d	145		145		145		145		171		191		245			
Weight (◉ marked standard type) kg			8.7	11.9	8.5	11.5	8.5	11.5	9.1	12.3	19.8	25.0	27.0	35.0	54.0	67.0		
■Connections and Mountings																		
Front-connected (FC)	Terminal screws		—		—		—		—		—		—		—			
	With extension bars		◉		◉		◉		◉		◉		○		○			
Rear-connected (RC)	Bolt studs		—		—		—		—		—		—		—			
	Flat bar studs		○		○		○		○		○		◉		◉			
Plug-in (PM) For switchboards	Standard (PMC)		○	—	○	—	○	—	○	—	○		—		—			
	High-performance (PMB)		○		○		○		○		—		—		—			
For distribution boards (PMC)			—		—		—		—		—		—		—			
Flush-mounted (FP) With flat bar studs			○		○		○		○		○		○		○			
Draw-out type (DR)			▲		▲		▲		▲		▲		○		○			
TemPlug70 (PG)			○	—	—		—		—		—		—		—			
TemPlug45B (PG4)			—		—		—		—		—		—		—			
DIN rail mount			—		—		—		—		—		—		—			
Clip-in chassis mount			—		—		—		—		—		—		—			
■Accessories (optional)		**Symbol**																
Internally mounted	Auxiliary switch	A X	●		●		●		●		●		●		●			
	Alarm switch	A L	●		●		●		●		●		●		●			
	Shunt trips	S H	●		●		●		●		●		●		●			
	Undervoltage trips	U V	●		●		●		●		●		●		● ⑥			
Externally mounted	Motor operator	M C	●		●		●		●		●		●		●			
	External operating handle: Breaker-mounted	H B	●		●		●		●		●		●		—			
	External operating handle: Door-mounted (variable depth)	H P	●		●		●		●		●		●		● ⑥③			
	Toggle extension ⑨	H A	●		●		●		●		● ㉔		● ㉔		● ②			
	Mechanical interlock ⑨ Slide type	M S	●		●		●		●		●		●		●			
	Toggle holder ⑨	H H	●		●		●		●		●		●		●			
	Toggle lock ⑨	H L																
	Terminal cover For front-connected ⑨	C F	●		●		●		●		●		—		—			
	Terminal cover For rear-connected and plug-in	C R	●		●		●		●		—		—		—			
	Interpole barrier ⑨	B A	● ③		● ③		● ③		● ③		● ③		● ③		—			
	Terminal block for lead ⑨	T F	●		●		●		●		●		●		●			
	Door flange ⑨	D F	●		●		●		●		●		●		●			
■Standard specifications																		
Overcurrent trip mechanism			Electronic ⑯		Thermal-magnetic(adjustable)		Thermal-magnetic(adjustable)		Electronic ⑯		Electronic ⑯		Electronic ⑯		Electronic ⑯			
Trip button (color)			Yes (Red)		Yes (Red)		Yes (Red)		Yes (Red)		Yes (Red)		Yes (Red)		Yes (Red)			
Handle position indication (ON: Red, OFF: Green)			Yes		Yes		Yes		Yes		Yes		Yes		Yes			
Suitability for isolation			Yes		Yes		Yes		Yes		Yes		Yes		Non			
CE marking			Yes		Yes		Yes		Yes		Yes		Yes		Non			
Page on which characteristics and outline dimensions are shown			7-36		7-40		7-40		7-42		7-46		7-48		7-76			

Notes:
◉ : Standard. This configuration used unless otherwise specified. ○ : Optional standard. Specify when ordering. ▲ : Semi-standard. ● : "yes" or "available". — : "no" or "not available".
① : DC rating available on request. ② : Supplied as standard. ③ : Line side interpole barriers are supplied as standard. (Front connection only) ⑥ : The UVT controller is installed externally, when provided with AC UVT. ⑨ : Not applicable to the draw-out type (DR). ⑬ : at 500V AC. ⑯ : Optional pretrip alarm or ground fault trip function available on request. ㉔ : One is supplied with every five breakers. Please specify if more are required. ⑥③ : Fixed depth, not adjustable.

3 High-fault level series

Frame size (A)	50	100	125	225	250	225	400	400
Type	**S50-GF**	**S100-GF**	**S125-GF**	**S225-GF**	**S250-GF**	**S225-GE**	**S400-GF**	**S400-GE**
Number of poles	3 4	2 3 4	2 3 4	2∗ 3 4	2∗ 3 4	3 4	3 4	3 4
■Ratings								
Rated current, A	15	15 60	125	125	250	(Adjustable)	125 250	(Adjustable) (Adjustable)
Calibrated at 45°C	20	20 75		150		125	150 300	125 175
	30	30 100		175		150	175 350	150 200
	40	40		200		175	200 400	175 225
	50	50		225		200	225	200 250
						225		225 300
∗2 poles breakers use the terminals of both ends of 3 poles breakers.								350 400
Rated insulation voltage〔U_i〕 V	690	690	690	690	690	690	690	690
Rated impulse withstand voltage〔U_{imp}〕 kV	8	8	8	8	8	8	8	8
■Rated breaking capacity, kA								
NK AC 690V	6/6	6/6	6/6	7.5/7.5	7.5/7.5	—	20/15	20/15
I_{cu}/I_{cs}(sym) 450V	50/25	50/25	50/25	50/25	50/25	—	65/50	65/50
240V	85/85	85/85	85/85	85/85	85/85	—	100/85	100/85
① DC 250V	40/40	40/40 ㉗	40/40 ㉗	40/40	40/40	—	—	—
IEC60947-2 AC 690V	6/6	6/6	6/6	7.5/7.5	7.5/7.5	7.5/7.5	20/15	20/15
I_{cu}/I_{cs}(sym) 500V	25/22	25/22	25/22	25/25	25/25	25/25	30/30	30/30
440V	50/25	50/25	50/25	50/25	50/25	50/25	65/50	65/50
415V	65/33	65/33	65/33	65/35	65/35	65/35	70/50	70/50
380V	65/33	65/33	65/33	65/35	65/35	65/35	70/50	70/50
240V	85/85	85/85	85/85	85/85	85/85	85/85	100/85	100/85
① DC 250V	40/40	40/40 ㉗	40/40 ㉗	40/40	40/40	—	40/40	—
125V	40/40	40/40 ㉗	40/40 ㉗	40/40	40/40	—	40/40	—
■Rated short time withstand current, kA	—	—	—	—	—	—	—	5 (0.3sec)
■External dimensions, mm								
a	90 120	60 90 120	60 90 120	105 105 140	105 105 140	105 140	140 185	140 185
b	155	155	155	165	165	165	260	260
c	68	68	68	68	68	103	103	103
d	92	92	92	92	92	127	145	145
Weight (◉ marked standard type) kg	1.1 1.4	0.7 1.1 1.4	0.7 1.1 1.4	1.5 1.5 1.9	1.5 1.5 1.9	2.3 3.1	4.2 5.6	4.3 5.7
■Connections and Mountings								
Front-connected (FC) Terminal screws	◉	◉	◉	◉	◉	◉	◉	◉
With extension bars	○ ㊸	○ ㊸	○ ㊸	○ ㊸	○ ㊸	○ ㊸	○ (BAR)	○ (BAR)
Rear-connected (RC) Bolt studs	—	—	—	—	—	—	—	—
Flat bar studs	○	○	○	○	○	○	○	○
Plug-in (PM) For switchboards Standard (PMC)	○ —	— ○ —	— ○ —	— ○ —	— ○ —	○ —	○ —	○ —
High-performance (PMB)	○	○	○	○	○	○	○	○
For distribution boards (PMC)	○ —	— ○ —	— ○ —	—	—	—	—	—
Flush-mounted (FP) With flat bar studs	○	○	○	○	○	○	○	○
Draw-out type (DR)	—	—	—	—	—	—	▲	▲
TemPlug70 (PG)	○ —	○ ○ —	○ ○ —	— ○ —	— ○ —	▲ —	○ —	○ —
TemPlug45B (PG4)	—	—	—	—	—	—	—	—
DIN rail mount	○ ⑪	— ○ ⑪	— ○ ⑪	—	—	—	—	—
Clip-in chassis mount	—	—	—	—	—	—	—	—
■Accessories (optional) Symbol								
Internally mounted: Auxiliary switch A X	●	●	●	●	●	●	●	●
Alarm switch A L	●	●	●	●	●	●	●	●
Shunt trips S H	●	●	●	●	●	●	●	●
Undervoltage trips U V	●	●	●	●	●	●	●	●
Externally mounted: Motor operator M C	●	— ●	— ●	●	●	●	●	●
External operating handle Breaker-mounted H B	●	— ●	— ●	●	●	●	●	●
Door-mounted (variable depth) H P	●	— ●	— ●	●	●	●	●	●
Toggle extension H A	—	—	—	—	—	—	●	●
Mechanical interlock⑨ Slide type M S	●	— ●	— ●	●	●	●	●	●
Toggle holder H H	●	●	●	●	●	●	●	●
Toggle lock H L	●	●	●	●	●	●		
Terminal cover For front-connected C F	●	●	●	●	●	●	●	●
For rear-connected and plug-in C R	●	●	●	●	●	●	●	●
Interpole barrier B A	● ③	● ③	● ③	● ③	● ③	● ③	● ③	● ③
Terminal block for lead T F	●	●	●	●	●	●	●	●
Door flange D F	●	●	●	●	●	●	●	●
■Standard specifications								
Overcurrent trip mechanism	Thermal-magnetic	Thermal-magnetic	Thermal-magnetic	Thermal-magnetic	Thermal-magnetic	Electronic ⑳	Thermal-magnetic	Electronic ⑯
Trip button (color)	Yes (Red)	Yes (Red)	Yes (Red)	Yes (Red)	Yes (Red)	Yes (Red)	Yes (Red)	Yes (Red)
Handle position indication (ON: Red, OFF: Green)	Yes	Yes	Yes	Yes	Yes	Yes	Yes	Yes
Suitability for isolation	Yes	Yes	Yes	Yes	Yes	Yes	Yes	Yes
CE marking	Yes	Yes	Yes	Yes	Yes	Yes	Yes	Yes
Page on which characteristics and outline dimensions are shown	7-10	7-10	7-12	7-14	7-18	7-28	7-20	7-30

Notes:
◉ : Standard. This configuration used unless otherwise specified. ○ : Optional standard. Specify when ordering. ▲ : Semi-standard. ● : "yes" or "available". — : "no" or "not available".
① : DC rating available on request. ③ : Line side interpole barriers are supplied as standard. (Front connection only) ⑨ : The mechanical interlock is not applicable to the draw-out type (DR).
⑪ : Provided with DIN rail adaptor. ⑯ : Optional pretrip alarm or ground fault trip function available on request. ⑳ : Optional pretrip alarm function available on request.
㉗ : Applicable to only 2 poles breakers. ㊸ : For the extension bars, please palce the order separately in parts.

3 High-fault level series

Frame size (A)	400		400		600		630		600		630		630		630	
Type	**S400-PF**		**S400-PE**		**S630-RF**				**S630-PF**				**S630-RE**		**S630-PE**	
Number of poles	3	4	3	4	3	4	3	4	3	4	3	4	3	4	3	4
■Ratings																
Rated current, A	250		(Adjustable)	(Adjustable)	500		630		500		630		(Adjustable)		(Adjustable)	
Calibrated at 45°C	300		125	175	600				600				250	500	250	500
	350		150	200									300	600	300	600
	400		175	225									350	630	350	630
			200	250									400		400	
			225	300												
				350												
				400												
Rated insulation voltage〔U_i〕 V	690		690		690		690		690		690		690		690	
Rated impulse withstand voltage〔U_{imp}〕 kV	8		8		8		8		8		8		8		8	
■Rated breaking capacity, kA																
NK AC 690V	20/15		20/15		—		—		—		—		—		—	
I_{cu}/I_{cs}(sym) 450V	80/80		80/80		—		—		—		—		—		—	
240V	100/85		100/85		—		—		—		—		—		—	
① DC 250V	—		—		—		—		—		—		—		—	
IEC60947-2 AC 690V	20/15		20/15		25/20		25/20		25/20		25/20		25/20		25/20	
I_{cu}/I_{cs}(sym) 500V	30/30		30/30		45/34		45/34		45/34		45/34		45/34		45/34	
440V	80/80		80/80		65/50		65/50		85/50		85/50		65/50		85/50	
415V	85/85		85/85		70/50		70/50		100/50		100/50		70/50		100/50	
380V	85/85		85/85		70/50		70/50		100/50		100/50		70/50		100/50	
240V	100/85		100/85		100/75		100/75		125/125		125/125		100/75		125/125	
① DC 250V	40/40		—		50/50		50/50		50/50		50/50		—		—	
125V	40/40		—		50/50		50/50		50/50		50/50		—		—	
■Rated short time withstand current, kA	—		5 (0.3sec)		—		—		—		—		10 (0.3sec)		10 (0.3sec)	
■External dimensions, mm																
a	140	185	140	185	210	280	210	280	210	280	210	280	210	280	210	280
b	260		260		273		273		273		273		273		273	
c	103		103		103		103		103		103		103		103	
d	145		145		145		145		145		145		145		145	
Weight (◉ marked standard type) kg	4.2	5.6	4.3	5.7	8.0	11.0	8.0	11.0	8.0	11.0	8.0	11.0	8.7	11.9	8.7	11.9
■Connections and Mountings																
Front-connected (FC) Terminal screws	◉		◉		—		—		—		—		—		—	
With extension bars	○ (BAR)		○ (BAR)		◉		◉		◉		◉		◉		◉	
Rear-connected (RC) Bolt studs	—		—		—		—		—		—		—		—	
Flat bar studs	○		○		○		○		○		○		○		○	
Plug-in (PM) For switchboards Standard (PMC)	○	—	○	—	○	—	○	—	○	—	○	—	○	—	○	—
High-performance (PMB)	○		○		○		○		○		○		○		○	
For distribution boards (PMC)	—		—		—		—		—		—		—		—	
Flush-mounted (FP) With flat bar studs	○		○		○		○		○		○		○		○	
Draw-out type (DR)	▲		▲		▲		▲		▲		▲		▲		▲	
TemPlug70 (PG)	○	—	○	—	○	—	○	—	○	—	○	—	○	—	○	—
TemPlug45B (PG4)	—		—		—		—		—		—		—		—	
DIN rail mount	—		—		—		—		—		—		—		—	
Clip-in chassis mount	—		—		—		—		—		—		—		—	
■Accessories (optional) Symbol																
Internally mounted: Auxiliary switch A X	●		●		●		●		●		●		●		●	
Alarm switch A L	●		●		●		●		●		●		●		●	
Shunt trips S H	●		●		●		●		●		●		●		●	
Undervoltage trips U V	●		●		●		●		●		●		●		●	
Externally mounted: Motor operator M C	●		●		●		●		●		●		●		●	
External operating handle Breaker-mounted H B	●		●		●		●		●		●		●		●	
Door-mounted (variable depth) H P	●		●		●		●		●		●		●		●	
Toggle extension ⑨ H A	●		●		●		●		●		●		●		●	
Mechanical interlock ⑨ Slide type M S	●		●		●		●		●		●		●		●	
Toggle holder ⑨ H H	●		●		●		●		●		●		●		●	
Toggle lock ⑨ H L																
Terminal cover For front-connected ⑨ C F	●		●		●		●		●		●		●		●	
For rear-connected and plug-in C R	●		●		●		●		●		●		●		●	
Interpole barrier ⑨ B A	● ③		● ③		● ③		● ③		● ③		● ③		● ③		● ③	
Terminal block for lead ⑨ T F	●		●		●		●		●		●		●		●	
Door flange ⑨ D F	●		●		●		●		●		●		●		●	
■Standard specifications																
Overcurrent trip mechanism	Thermal-magnetic		Electronic ⑯		Thermal-magnetic		Thermal-magnetic		Thermal-magnetic		Thermal-magnetic		Electronic ⑯		Electronic ⑯	
Trip button (color)	Yes (Red)		Yes (Red)		Yes (Red)		Yes (Red)		Yes (Red)		Yes (Red)		Yes (Red)		Yes (Red)	
Handle position indication (ON: Red, OFF: Green)	Yes		Yes		Yes		Yes		Yes		Yes		Yes		Yes	
Suitability for isolation	Yes		Yes		Yes		Yes		Yes		Yes		Yes		Yes	
CE marking	Yes		Yes		Yes		Yes		Yes		Yes		Yes		Yes	
Page on which characteristics and outline dimensions are shown	7-20		7-30		7-34		7-34		7-34		7-34		7-36		7-36	

Notes:
◉ : Standard. This configuration used unless otherwise specified. ○ : Optional standard. Specify when ordering. ▲ : Semi-standard. ● : "yes" or "available". — : "no" or "not available".
① : DC rating available on request. ③ : Line side interpole barriers are supplied as standard. (Front connection only) ⑨ : Not applicable to the draw-out type (DR).
⑯ : Optional pretrip alarm or ground fault trip function available on request. ㉔ : One is supplied with every five breakers. Please specify if more are required.

3 High-fault level series

Frame size (A)			800		800		800		800		1250												
Type			**S800-RF**		**S800-PF**		**S800-RE**		**S800-PE**		**S1250-GE**												
Number of poles			3	4	3	4	3	4	3	4	3	4											
■Ratings																							
Rated current, A			700		700		(Adjustable)		(Adjustable)		(Adjustable)												
Calibrated at 45°C			800		800		350	600	350	600	500	1000											
							400	700	400	700	600	1200											
							450	800	450	800	700	1250											
							500		500		800												
Rated insulation voltage〔U_i〕 V			690		690		690		690		690												
Rated impulse withstand voltage〔U_{imp}〕 kV			8		8		8		8		8												
■Rated breaking capacity, kA																							
NK	AC	690V	—		—		—		—		45/34												
I_{cu}/I_{cs}(sym)		450V	—		—		—		—		85/65												
		240V	—		—		—		—		125/94												
	① DC	250V	—		—		—		—		—												
IEC60947-2	AC	690V	25/20		25/20		25/20		25/20		45/34												
I_{cu}/I_{cs}(sym)		500V	45/34		45/34		45/34		45/34		65/50												
		440V	65/50		85/50		65/50		85/50		85/65												
		415V	70/50		100/50		70/50		100/50		85/65												
		380V	70/50		100/50		70/50		100/50		100/75												
		240V	100/75		125/125		100/75		125/125		125/94												
	① DC	250V	50/50		50/50		—		—		—												
		125V	50/50		50/50		—		—		—												
■Rated short time withstand current, kA			—		—		10 (0.3sec)		10 (0.3sec)		15 (0.3sec)												
■External dimensions, mm																							
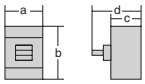		a	210	280	210	280	210	280	210	280	210	280											
		b	273		273		273		273		370												
		c	103		103		103		103		120												
		d	145		145		145		145		171												
Weight (◉ marked standard type) kg			8.5	11.5	8.5	11.5	9.1	12.3	9.1	12.3	19.8	25.0											
■Connections and Mountings																							
Front-connected (FC)	Terminal screws		—		—		—		—		—												
	With extension bars		◉		◉		◉		◉		◉												
Rear-connected (RC)	Bolt studs		—		—		—		—		—												
	Flat bar studs		○		○		○		○		○												
Plug-in (PM) For switchboards	Standard (PMC)		○	—	○	—	○	—	○	—	○												
	High-performance (PMB)		○		○		○		○		—												
For distribution boards (PMC)			—		—		—		—		—												
Flush-mounted (FP)	With flat bar studs		○		○		○		○		○												
Draw-out type (DR)			▲		▲		▲		▲		▲												
TemPlug70 (PG)			—		—		—		—		—												
TemPlug45B (PG4)			—		—		—		—		—												
DIN rail mount			—		—		—		—		—												
Clip-in chassis mount			—		—		—		—		—												
■Accessories (optional)		**Symbol**																					
Internally mounted	Auxiliary switch	A X	●		●		●		●		●												
	Alarm switch	A L	●		●		●		●		●												
	Shunt trips	S H	●		●		●		●		●												
	Undervoltage trips	U V	●		●		●		●		●												
Externally mounted	Motor operator	M C	●		●		●		●		●												
	External operating handle: Breaker-mounted	H B	●		●		●		●		●												
	External operating handle: Door-mounted (variable depth)	H P	●		●		●		●		●												
	Toggle extension ⑨	H A	●		●		●		●		● ㉔												
	Mechanical interlock ⑨ Slide type	M S	●		●		●		●		●												
	Toggle holder ⑨	H H	●		●		●		●		●												
	Toggle lock ⑨	H L																					
	Terminal cover For front-connected ⑨	C F	●		●		●		●		●												
	Terminal cover For rear-connected and plug-in	C R	●		●		●		●		—												
	Interpole barrier ⑨	B A	● ③		● ③		● ③		● ③		● ③												
	Terminal block for lead ⑨	T F	●		●		●		●		●												
	Door flange ⑨	D F	●		●		●		●		●												
■Standard specifications																							
Overcurrent trip mechanism			Thermal-magnetic		Thermal-magnetic		Electronic ⑯		Electronic ⑯		Electronic ⑯												
Trip button (color)			Yes (Red)		Yes (Red)		Yes (Red)		Yes (Red)		Yes (Red)												
Handle position indication (ON: Red, OFF: Green)			Yes		Yes		Yes		Yes		Yes												
Suitability for isolation			Yes		Yes		Yes		Yes		Yes												
CE marking			Yes		Yes		Yes		Yes		Yes												
Page on which characteristics and outline dimensions are shown			7-40		7-40		7-42		7-42		7-46												

Notes:
◉ : Standard. This configuration used unless otherwise specified. ○ : Optional standard. Specify when ordering. ▲ : Semi-standard. ● : "yes" or "available". — : "no" or "not available".
① : DC rating available on request. ③ : Line side interpole barriers are supplied as standard. (Front connection only) ⑨ : Not applicable to the draw-out type (DR).
⑯ : Optional pretrip alarm or ground fault trip function available on request. ㉔ : One is supplied with every five breakers. Please specify if more are required.

Molded Case Circuit Breakers

4 Current limiting standard series

																	TemBreak		TemBreak	
Frame size (A)			100		125		225		400		630		800		1000		1200			
Type			**H100-NF**		**H125-NF**		**H225-NF**		**H400-NE**		**H630-NE**		**H800-NE**		**TL-1000NE**		**TL-1200NE**			
Number of poles			3	4	3	4	3	4	3	4	3	4	3	4	3	4	3	4		
■Ratings																				
Rated current, A			15	50	125		125		(Adjustable)	(Adjustable)	(Adjustable)		(Adjustable)		(Adjustable)		(Adjustable)			
Calibrated at 45°C			20	60			150		125	175	250	500	350	600	500	800	600	1000		
			30	75			175		150	200	300	600	400	700	600	900	700	1200		
			40	100			200		175	225	350	630	450	800	700	1000	800			
							225		200	250	400		500							
									225	300										
										350										
										400										
Rated insulation voltage〔U_i〕 V			690		690		690		690		690		690		690		690			
Rated impulse withstand voltage〔U_{imp}〕 kV			8		8		8		8		8		8		8		8			
■Rated breaking capacity, kA																				
NK	AC	690V	20/15		20/15		20/15		35/35		25/20		25/20		—		—			
I_{cu}/I_{cs}(sym)		450V	120/80		120/80		120/80		120/80		125/94		125/94		125/— ㉓		125/— ㉓			
		240V	150/150		150/150		150/150		150/150		150/150		150/150		—		—			
	① DC	250V	—		—		—		—		—		—		—		—			
IEC60947-2	AC	690V	20/15		20/15		20/15		35/35		25/20		25/20		45/34		45/34			
I_{cu}/I_{cs}(sym)		500V	45/45		45/45		45/45		45/45		45/34		45/34		75/57		75/57			
		440V	120/80		120/80		120/80		120/80		125/94		125/94		125/65		125/65			
		415V	125/85		125/85		125/85		125/85		125/94		125/94		125/65		125/65			
		380V	125/85		125/85		125/85		125/85		125/94		125/94		125/65		125/65			
		240V	150/150		150/150		150/150		150/150		150/150		150/150		150/113		150/113			
	① DC	250V	40/40		40/40		40/40		—		—		—		—		—			
		125V	40/40		40/40		40/40		—		—		—		—		—			
■Rated short time withstand current, kA			—		—		—		5 (0.3sec)		10 (0.3sec)		10 (0.3sec)		15 (0.3sec)		15 (0.3sec)			
■External dimensions, mm																				
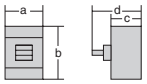		a	105	140	105	140	105	140	140	185	210	280	210	280	210	280	210	280		
		b	165		165		165		260		273		273		370		370			
		c	103		103		103		140		140		140		140		140			
		d	127		127		127		182		182		182		191		191			
Weight (◉ marked standard type) kg			2.4	3.2	2.4	3.2	2.4	3.2	7.1	9.4	13.5	19.6	14.3	20.3	26.0	33.7	26.0	33.7		
■Connections and Mountings																				
Front-connected (FC)	Terminal screws		◉		◉		◉		◉		—		—		—		—			
	With extension bars		○ ㊸		○ ㊸		○ ㊸		○ (BAR)		◉		◉		◉		◉			
Rear-connected (RC)	Bolt studs		—		—		—		—		—		—		—		—			
	Flat bar studs		○		○		○		○		○		○		○		○			
Plug-in (PM)	For switchboards	Standard (PMC)	○	—	○	—	○	—	○	—	○	—	○	—	○		○			
		High-performance (PMB)	○		○		○		○		○		○		—		—			
	For distribution boards (PMC)		—		—		—		—		—		—		—		—			
Flush-mounted (FP)	With flat bar studs		○		○		○		○		○		○		○		○			
Draw-out type (DR)			—		—		—		—		—		—		▲		▲			
TemPlug70 (PG)			▲	—	▲	—	▲	—	—		—		—		—		—			
TemPlug45B (PG4)			—		—		—		—		—		—		—		—			
DIN rail mount			—		—		—		—		—		—		—		—			
Clip-in chassis mount			—		—		—		—		—		—		—		—			
■Accessories (optional)		**Symbol**																		
Internally mounted	Auxiliary switch	A X	●		●		●		●		●		●		●		●			
	Alarm switch	A L	●		●		●		●		●		●		●		●			
	Shunt trips	S H	●		●		●		●		●		●		●		●			
	Undervoltage trips	U V	●		●		●		●		●		●		● ⑥		● ⑥			
Externally mounted	Motor operator	M C	●		●		●		●		●		●		●		●			
	External operating handle: Breaker-mounted	H B	●		●		●		●		●		●		●		●			
	External operating handle: Door-mounted (variable depth)	H P	●		●		●		●		●		●		●		●			
	Toggle extension	H A	—		—		—		●		●		●		● ㉔		● ㉔			
	Mechanical interlock⑨ Slide type	M S	●		●		●		●		●		●		●		●			
	Toggle holder	H H	●		●		●		●		●		●		●		●			
	Toggle lock	H L	●		●		●													
	Terminal cover: For front-connected	C F	●		●		●		●		●		●		—		—			
	Terminal cover: For rear-connected and plug-in	C R	●		●		●		●		●		●		—		—			
	Interpole barrier	B A	● ③		● ③		● ③		● ③		● ③		● ③		● ③		● ③			
	Terminal block for lead	T F	●		●		●		●		●		●		●		●			
	Door flange	D F	●		●		●		●		●		●		●		●			
■Standard specifications																				
Overcurrent trip mechanism			Thermal-magnetic		Thermal-magnetic		Thermal-magnetic		Electronic ⑯		Electronic ⑯		Electronic ⑯		Electronic ⑯		Electronic ⑯			
Trip button (color)			Yes (Red)		Yes (Red)		Yes (Red)		Yes (Red)		Yes (Red)		Yes (Red)		Yes (Brown)		Yes (Brown)			
Handle position indication (ON: Red, OFF: Green)			Yes		Yes		Yes		Yes		Yes		Yes		Yes		Yes			
Suitability for isolation			Yes		Yes		Yes		Yes		Yes		Yes		Non		Non			
CE marking			Yes		Yes		Yes		Yes		Yes		Yes		Non		Non			
Page on which characteristics and outline dimensions are shown			7-22		7-24		7-26		7-32		7-38		7-44		7-74		7-74			

Notes:

◉ : Standard. This configuration used unless otherwise specified. ○ : Optional standard. Specify when ordering. ▲ : Semi-standard. ● : "yes" or "available". — : "no" or "not available".
① : DC rating available on request. ③ : Line side interpole barriers are supplied as standard. (Front connection only) ⑥ : The UVT controller is installed externally, when provided with AC UVT.
⑨ : The mechanical interlock is not applicable to the draw-out type (DR). ⑯ : Optional pretrip alarm or ground fault trip function available on request. ㉓ : at 460V AC.
㉔ : One is supplied with every five breakers. Please specify if more are required. ㊸ : For the extension bars, please palce the order separately in parts.

5 Current limiting High-fault level series

Frame size (A)	100		125		225		400		630		800			
Type	**L100-NF**		**L125-NF**		**L225-NF**		**L400-NE**		**L630-NE**		**L800-NE**			
Number of poles	3	4	3	4	3	4	3	4	3	4	3	4		
■Ratings														
Rated current, A	15	50	125		125		(Adjustable)	(Adjustable)	(Adjustable)		(Adjustable)			
Calibrated at 45°C	20	60			150		125	175	250	500	350	600		
	30	75			175		150	200	300	600	400	700		
	40	100			200		175	225	350	630	450	800		
					225		200	250	400		500			
							225	300						
								350						
								400						
Rated insulation voltage〔U_i〕 V	690		690		690		690		690		690			
Rated impulse withstand voltage〔U_{imp}〕 kV	8		8		8		8		8		8			
■Rated breaking capacity, kA														
NK AC 690V	25/20		25/20		25/20		50/50		25/20		25/20			
I_{cu}/I_{cs}(sym) 450V	180/135		180/135		180/135		180/135		180/135		180/135			
240V	200/150 ㉛		200/150 ㉛		200/150 ㉛		200/150 ㉛		200/150		200/150			
① DC 250V	—		—		—		—		—		—			
IEC60947-2 AC 690V	25/20		25/20		25/20		50/50		25/20		25/20			
I_{cu}/I_{cs}(sym) 500V	65/65		65/65		65/65		65/65		45/34		45/34			
440V	180/135		180/135		180/135		180/135		180/135		180/135			
415V	200/150		200/150		200/150		200/150		200/150		200/150			
380V	200/150		200/150		200/150		200/150		200/150		200/150			
240V	200/150		200/150		200/150		200/150		200/150		200/150			
① DC 250V	40/40		40/40		40/40		—		—		—			
125V	40/40		40/40		40/40		—		—		—			
■Rated short time withstand current, kA	—		—		—		5 (0.3sec)		10 (0.3sec)		10 (0.3sec)			
■External dimensions, mm														
a	105	140	105	140	105	140	140	185	210	280	210	280		
b	165		165		165		260		273		273			
c	103		103		103		140		140		140			
d	127		127		127		182		182		182			
Weight (◉ marked standard type) kg	2.4	3.2	2.4	3.2	2.4	3.2	7.1	9.4	13.5	19.6	14.3	20.3		
■Connections and Mountings														
Front-connected (FC) Terminal screws	◉		◉		◉		◉		—		—			
With extension bars	○ ㊸		○ ㊸		○ ㊸		○ (BAR)		◉		◉			
Rear-connected (RC) Bolt studs	—		—		—		—		—		—			
Flat bar studs	○		○		○		○		○		○			
Plug-in (PM) For switchboards Standard (PMC)	○	—	○	—	○	—	○	—	○	—	○	—		
High-performance (PMB)	○		○		○		○		○		○			
For distribution boards (PMC)	—		—		—		—		—		—			
Flush-mounted (FP) With flat bar studs	○		○		○		○		○		○			
Draw-out type (DR)	—		—		—		—		—		—			
TemPlug70 (PG)	—		—		—		—		—		—			
TemPlug45B (PG4)	—		—		—		—		—		—			
DIN rail mount	—		—		—		—		—		—			
Clip-in chassis mount	—		—		—		—		—		—			
■Accessories (optional) **Symbol**														
Internally mounted: Auxiliary switch A X	●		●		●		●		●		●			
Alarm switch A L	●		●		●		●		●		●			
Shunt trips S H	●		●		●		●		●		●			
Undervoltage trips U V	●		●		●		●		●		●			
Externally mounted: Motor operator M C	●		●		●		●		●		●			
External operating handle Breaker-mounted H B	●		●		●		●		●		●			
Door-mounted (variable depth) H P	●		●		●		●		●		●			
Toggle extension H A	—		—		—		●		●		●			
Mechanical interlock⑨ Slide type M S	●		●		●		●		●		●			
Toggle holder H H	●		●		●		●		●		●			
Toggle lock H L	●		●		●									
Terminal cover For front-connected C F	●		●		●		●		●		●			
For rear-connected and plug-in C R	●		●		●		●		●		●			
Interpole barrier B A	● ③		● ③		● ③		● ③		● ③		● ③			
Terminal block for lead T F	●		●		●		●		●		●			
Door flange D F	●		●		●		●		●		●			
■Standard specifications														
Overcurrent trip mechanism	Thermal-magnetic		Thermal-magnetic		Thermal-magnetic		Electronic ⑯		Electronic ⑯		Electronic ⑯			
Trip button (color)	Yes (Red)		Yes (Red)		Yes (Red)		Yes (Red)		Yes (Red)		Yes (Red)			
Handle position indication (ON: Red, OFF: Green)	Yes		Yes		Yes		Yes		Yes		Yes			
Suitability for isolation	Yes		Yes		Yes		Yes		Yes		Yes			
CE marking	Yes		Yes		Yes		Yes		Yes		Yes			
Page on which characteristics and outline dimensions are shown	7-22		7-24		7-26		7-32		7-38		7-44			

Notes:
◉ : Standard. This configuration used unless otherwise specified. ○ : Optional standard. Specify when ordering. ▲ : Semi-standard. ● : "yes" or "available". — : "no" or "not available".
① : DC rating available on request. ③ : Line side interpole barriers are supplied as standard. (Front connection only) ⑨ : The mechanical interlock is not applicable to the draw-out type (DR).
⑯ : Optional pretrip alarm or ground fault trip function available on request. ㉛ : Also applicable to AC415V. ㊸ : For the extension bars, please palce the order separately in parts.

Molded Case Circuit Breakers

6 Motor protection series

Frame size (A)	50	100	225
Type	**E50-CM**	**S100-NM**	**S225-NM**
Number of poles	3	3	3
■Ratings			
Motor rated capacity (kW) and breaker rated current (A) Calibrated at 45℃			

(A)	(kW) 200/220V	(kW) 400/440V
0.7	—	0.2
1.4	0.2	0.4
2	—	0.75
2.6	0.4	—
4	0.75	1.5
5	—	2.2
8	1.5	3.7
10	2.2	—
12	—	5.5
16	3.7	7.5
25	5.5	11
32	7.5	15
40	—	18.5
45	11	22

(A)	(kW) 200/220V	(kW) 400/440V
16	3.7	7.5
24	5.5	11
32	7.5	15
40	—	18.5
45	11	22
60	15	30
75	18.5	37
90	22	45
100	—	55

(A)	(kW) 200/220V	(kW) 400/440V
125	30	—
150	37	75
175	45	90
225	55	110

Note: Select an appropriate one depending on the total load current of the motor operator.

Rated insulation voltage 〔U_i〕 V			690	690	690
Rated impulse withstand voltage 〔U_{imp}〕 kV			6	8	8
■Rated breaking capacity, kA					
NK I_{cu}/I_{cs}(sym)	AC	690V	—	—	—
		450V	2.5/— ⑬	25/25	25/25
		240V	5/— ⑭	50/50	65/65
	DC	250V	—	—	—
IEC 60947-2 I_{cu}/I_{cs}(sym)	AC	440V	2.5/1.3	25/25	25/25
		415V	2.5/1.3	30/30	35/35
		380V	2.5/1.3	30/30	35/35
		240V	5/2.5	50/50	65/65
	DC	250V	—	—	—
■External dimensions, mm					
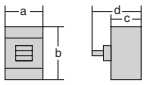		a	75	90	105
		b	130	155	165
		c	68	68	68
		d	87	92	92
Weight (◉ marked standard type) kg			0.74	1.1	1.5
■Connections and Mountings					
Front-connected (FC)	Terminal screws		◉	◉	◉
	With extension bars		—	○ ㊸	○ ㊸
Rear-connected (RC)	Bolt studs		○	—	—
	Flat bar studs		—	○	○
Plug-in (PM) For switchboards	Standard (PMC)		○	—	—
	High-performance (PMB)		—	—	—
For distribution boards (PMC)			○	—	—
Flush-mounted (FP)	Bolt studs		○	—	—
	Flat bar studs		—	○	○
Draw-out type (DR)			—	—	—
TemPlug70 (PG)			—	○	○
TemPlug45B (PG4)			—	—	—
DIN rail mount			—	○ ⑪	—
Clip-in chassis mount			—	—	—
■Accessories (optional)		**Symbol**			
Internally mounted	Auxiliary switch	A X	●	●	●
	Alarm switch	A L	●	●	●
	Shunt trips	S H	●	●	●
	Undervoltage trips	U V	—	●	●
Externally mounted	Motor operator	M C	—	●	●
	External operating handle: Breaker-mounted	H B	●	●	●
	External operating handle: Door-mounted (variable depth)	H P	●	●	●
	Toggle extension	H A	—	—	—
	Mechanical interlock Slide type	M S	●	●	●
	Toggle holder	H H	●	●	●
	Toggle lock	H L	●	●	●
	Terminal cover: For front-connected	C F	●	●	●
	Terminal cover: For rear-connected and plug-in	C R	●	●	●
	Interpole barrier	B A	●	● ③	● ③
	Terminal block for lead	T F	●	●	●
	Door flange	D F	●	●	●
■Standard specifications					
Overcurrent trip mechanism			Thermal-magnetic ㉘	Thermal-magnetic	Thermal-magnetic
Trip button (color)			Yes (Red)	Yes (Red)	Yes (Red)
Handle position indication (ON: Red, OFF: Green)			Yes	Yes	Yes
Suitability for isolation			Non	Yes	Yes
CE marking			Non	Yes	Yes
Page on which characteristics and outline dimensions are shown			7-50	7-52	7-54

Notes:

◉ : Standard. This configuration used unless otherwise specified. ○ : Optional standard. Specify when ordering. ● : "yes" or "available". — : "no" or "not available".

③ : Line side interpole barriers are supplied as standard. (Front connection only) ⑪ : Provided with DIN rail adaptor. ⑬ : at 500V AC. ⑭ : at 250V AC.

㉘ : Hydraulic-magnetic type for below 25A rating. ㊸ : For the extension bars, please palce the order separately in parts.

Caution

The breakers listed above are not always applicable to high efficiency motors because both startup current and rush current are generally higher than compared to general-purpose motors.

7 Switch-disconnectors

Frame size (A)		100		125				125		250				400	
Type		**S100-NN**		**S125-SN**				**S125-NN**		**S250-SN**				**S400-NN**	
Number of poles		3	4	3	4	3	4	3	4	3	4	3	4	3	4
■Ratings															
Rated current, A		100		100		125		125		225		250		400	
Rated insulation voltage 〔U_i〕 V		690		690		690		690		690		690		690	
Rated operational voltage V	AC	690		690		690		690		690		690		690	
	DC	250		250		250		250		250		250		250	
Rated short circuit making capacity, kA peak		3.6		2.8		2.8		3.6		6		6		9	
Rated short time withstand current, kA		2 (0.3sec)		2 (0.3sec)		2 (0.3sec)		2 (0.3sec)		3 (0.3sec)		3 (0.3sec)		5 (0.3sec)	
Rated impulse withstand voltage 〔U_{imp}〕 kV		8		8		8		8		8		8		8	
■Performance															
Utilization category	AC 690V	AC-23A		AC-23A		AC-23A		AC-23A		AC-23A		AC-23A		AC-23A	
IEC 60947-3	DC 250V	DC-22A		DC-22A		DC-22A		DC-22A		DC-22A		DC-22A		DC-22A	
Upstream breaker (OCPD) ㉙		S100-NF		S125-SF		S125-SF		S125-NF		S250-SF		S250-SF		S400-NF	
■External dimensions, mm															
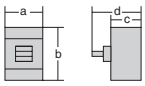	a	90	120	75	100	75	100	90	120	105	140	105	140	140	185
	b	155		130		130		155		165		165		260	
	c	68		68		68		68		68		68		103	
	d	92		95		95		92		95		95		145	
Weight (◉ marked standard type) kg		1.1	1.4	0.7	0.9	0.7	0.9	1.1	1.4	1.5	1.9	1.5	1.9	4.2	5.6
■Connections and Mountings															
Front-connected (FC) Terminal screws		◉		◉		◉		◉		◉		◉		◉	
With extension bars		○ ㊸		○ ㊸		○ ㊸		○ ㊸		○ ㊸		○ ㊸		○ (BAR)	
Rear-connected (RC) Bolt studs		—		—		—		—		—		—		—	
Flat bar studs		○		○		○		○		○		○		○	
Plug-in (PM) For switchboards Standard (PMC)		○	—	○	—	○	—	○	—	○	—	○	—	○	—
High-performance (PMB)		○		—		—		○		—		—		○	
For distribution boards (PMC)		○	—	○ ㊽	—	○ ㊽	—	○	—	—		—		—	
Flush-mounted (FP) With flat bar studs		○		○		○		○		○		○		○	
Draw-out type (DR)		—		—		—		—		—		—		▲	
TemPlug70 (PG)		○	—	—		—		○	—	○	—	○	—	○	—
TemPlug45B (PG4)		—		—		—		—		—		—		—	
DIN rail mount		○ ⑪		○ ⑪		○ ⑪		○ ⑪		—		—		—	
Clip-in chassis mount		—		—		—		—		—		—		—	
■Accessories (optional)	**Symbol**														
Internally mounted: Auxiliary switch	A X	●		●		●		●		●		●		●	
Internally mounted: Alarm switch	A L	●		●		●		●		●		●		●	
Internally mounted: Shunt trips	S H	●		●		●		●		●		●		●	
Internally mounted: Undervoltage trips	U V	●		●		●		●		●		●		●	
Externally mounted: Motor operator	M C	●		—		—		●		●		●		●	
Externally mounted: External operating handle Breaker-mounted	H B	●		●		●		●		●		●		●	
Externally mounted: External operating handle Door-mounted (variable depth)	H P	●		●		●		●		●		●		●	
Externally mounted: Toggle extension	H A	—		—		—		—		—		—		●	
Externally mounted: Mechanical interlock⑨ Slide type	M S	●		●		●		●		●		●		●	
Externally mounted: Toggle holder	H H	●		●		●		●		●		●		●	
Externally mounted: Toggle lock	H L	●		●		●		●		●		●			
Externally mounted: Terminal cover For front-connected	C F	●		●		●		●		●		●		●	
Externally mounted: Terminal cover For rear-connected and plug-in	C R	●		●		●		●		●		●		●	
Externally mounted: Interpole barrier	B A	● ③		● ③		● ③		● ③		● ③		● ③		● ③	
Externally mounted: Terminal block for lead	T F	●		●		●		●		●		●		●	
Externally mounted: Door flange	D F	●		●		●		●		●		●		●	
■Standard specifications															
Trip button (color)		Yes (Red)		Yes (Red)		Yes (Red)		Yes (Red)		Yes (Red)		Yes (Red)		Yes (Red)	
Handle position indication (ON: Red, OFF: Green)		Yes		Yes		Yes		Yes		Yes		Yes		Yes	
Suitability for isolation		Yes		Yes		Yes		Yes		Yes		Yes		Yes	
CE marking		Yes		Yes		Yes		Yes		Yes		Yes		Yes	
Page on which characteristics and outline dimensions are shown		7-56		7-58		7-58		7-60		7-62		7-62		7-64	

Notes:

◉ : Standard. This configuration used unless otherwise specified. ○ : Optional standard. Specify when ordering. ▲ : Semi-standard. ● : "yes" or "available". — : "no" or "not available".
③ : Line side interpole barriers are supplied as standard. (Front connection only) ⑨ : The mechanical interlock is not applicable to the draw-out type (DR). ⑪ : Provided with DIN rail adaptor.
㉙ : Required for overcurrent protection. Rated conditional short-circuit current [I_{cc}] will be the same as Rated short-circuit breaking capacity of upstream breaker.
㊸ : For the extension bars, please palce the order separately in parts. ㊽ : Specify PMD when the internal accessories are fitted.

7 Switch-disconnectors

Frame size (A)			600		630		800		1250		1600	
Type			**S630-GN**				**S800-NN**		**S1250-NN**		**S1600-NN**	
Number of poles			3	4	3	4	3	4	3	4	3	4
■Ratings												
Rated current, A			600		630		800		1250		1600	
Rated insulation voltage 〔U_i〕 V			690		690		690		690		690	
Rated operational voltage V		AC	690		690		690		690		690	
		DC	250		250		250		250		250	
Rated short circuit making capacity, kA peak			17		17		17		32		45	
Rated short time withstand current, kA			10 (0.3sec)		10 (0.3sec)		10 (0.3sec)		15 (0.3sec)		20 (0.3sec)	
Rated impulse withstand voltage 〔U_{imp}〕 kV			8		8		8		8		8	
■Performance												
Utilization category	AC	690V	AC-23A		AC-23A		AC-23A		AC-23A		AC-23A	
IEC 60947-3	DC	250V	DC-22A		DC-22A		DC-22A		DC-22A		DC-22A	
Upstream breaker (OCPD) ㉙			S630-NF		S630-NF		S800-NF		S1250-NE		S1600-NE	
■External dimensions, mm												
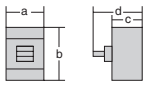		a	210	280	210	280	210	280	210	280	210	280
		b	273		273		273		370		370	
		c	103		103		103		120		140	
		d	145		145		145		171		191	
Weight (◉ marked standard type) kg			8.0	11.0	8.0	11.0	8.0	11.5	18.2	23.4	24.9	32.9
■Connections and Mountings												
Front-connected (FC)	Terminal screws		—		—		—		—		—	
	With extension bars		◉		◉		◉		◉		○	
Rear-connected (RC)	Bolt studs		—		—		—		—		—	
	Flat bar studs		○		○		○		○		◉	
Plug-in (PM) For switchboards	Standard (PMC)		○	—	○	—	○	—	○	—	—	
	High-performance (PMB)		○		○		○		—		—	
For distribution boards (PMC)			—		—		—		—		—	
Flush-mounted (FP) With flat bar studs			○		○		○		○		○	
Draw-out type (DR)			▲		▲		▲		▲		○	
TemPlug70 (PG)			○	—	○	—	—		—		—	
TemPlug45B (PG4)			—		—		—		—		—	
DIN rail mount			—		—		—		—		—	
Clip-in chassis mount			—		—		—		—		—	
■Accessories (optional)		**Symbol**										
Internally mounted	Auxiliary switch	A X	●		●		●		●		●	
	Alarm switch	A L	●		●		●		●		●	
	Shunt trips	S H	●		●		●		●		●	
	Undervoltage trips	U V	●		●		●		●		●	
Externally mounted	Motor operator	M C	●		●		●		●		●	
	External operating handle: Breaker-mounted	H B	●		●		●		●		●	
	External operating handle: Door-mounted (variable depth)	H P	●		●		●		●		●	
	Toggle extension ⑨	H A	●		●		●		● ㉔		● ㉔	
	Mechanical interlock ⑨ Slide type	M S	●		●		●		●		●	
	Toggle holder ⑨	H H	●		●		●		●		●	
	Toggle lock ⑨	H L										
	Terminal cover For front-connected ⑨	C F	●		●		●		●		—	
	Terminal cover For rear-connected and plug-in	C R	●		●		●		—		—	
	Interpole barrier ⑨	B A	● ③		● ③		● ③		● ③		● ③	
	Terminal block for lead ⑨	T F	●		●		●		●		●	
	Door flange ⑨	D F	●		●		●		●		●	
■Standard specifications												
Trip button (color)			Yes (Red)		Yes (Red)		Yes (Red)		Yes (Red)		Yes (Red)	
Handle position indication (ON: Red, OFF: Green)			Yes		Yes		Yes		Yes		Yes	
Suitability for isolation			Yes		Yes		Yes		Yes		Yes	
CE marking			Yes		Yes		Yes		Yes		Yes	
Page on which characteristics and outline dimensions are shown			7-66		7-66		7-68		7-70		7-72	

Notes:

◉ : Standard. This configuration used unless otherwise specified. ○ : Optional standard. Specify when ordering. ▲ : Semi-standard. ● : "yes" or "available". — : "no" or "not available".

③ : Line side interpole barriers are supplied as standard. (Front connection only) ⑨ : Not applicable to the draw-out type (DR).

㉔ : One is supplied with every five breakers. Please specify if more are required.

㉙ : Required for overcurrent protection. Rated conditional short-circuit current [I_{cc}] will be the same as Rated short-circuit breaking capacity of upstream breaker.

8 Non-automatic trip breakers

		TemBreak	
Frame size (A)		2000	
Type		**XS2000NN**	
Number of poles		3	4
■Ratings			
Rated current, A		2000	
Rated insulation voltage 〔U_i〕 V		690	
Rated operational voltage V	AC	690	
	DC	250	
Rated short circuit making capacity, kA peak		90	
Rated short time withstand current, kA		35 (0.3sec)	
Rated impulse withstand voltage 〔U_{imp}〕 kV		8	
■Performance			
Max switching current A	AC	12000	
IEC 60947-2 Ann.L CBI-Y	DC	5000	
Endurance Number of operating cycles with current		500	
Number of operating cycles without current		2500	
Upstream breaker (OCPD) ㉙		XS2000NE	
■External dimensions, mm			
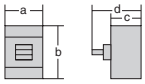	a	320	429
	b	450	
	c	185	
	d	245	
Weight (◉ marked standard type) kg		51.8	64.8
■Connections and Mountings			
Front-connected (FC) Terminal screws		—	
With extension bars		○	
Rear-connected (RC) Bolt studs		—	
Flat bar studs		◉	
Plug-in (PM) For switchboards Standard (PMC)		—	
High-performance (PMB)		—	
For distribution boards (PMC)		—	
Flush-mounted (FP) With flat bar studs		○	
Draw-out type (DR)		○	
TemPlug70 (PG)		—	
TemPlug45B (PG4)		—	
DIN rail mount		—	
Clip-in chassis mount		—	
■Accessories (optional)	**Symbol**		
Internally mounted: Auxiliary switch	A X	●	
Internally mounted: Alarm switch	A L	●	
Internally mounted: Shunt trips	S H	●	
Internally mounted: Undervoltage trips	U V	● ⑥	
Externally mounted: Motor operator	M C	●	
Externally mounted: External operating handle Breaker-mounted	H B	—	
Externally mounted: External operating handle Door-mounted (variable depth)	H P	● ㊸	
Externally mounted: Toggle extension	H A	● ②	
Externally mounted: Mechanical interlock⑨ Slide type	M S	●	
Externally mounted: Toggle holder	H H	●	
Externally mounted: Toggle lock	H L		
Externally mounted: Terminal cover For front-connected	C F	—	
Externally mounted: Terminal cover For rear-connected and plug-in	C R	—	
Externally mounted: Interpole barrier	B A	—	
Externally mounted: Terminal block for lead	T F	●	
Externally mounted: Door flange	D F	●	
■Standard specifications			
Trip button (color)		Yes (Red)	
Handle position indication (ON: Red, OFF: Green)		Yes	
Suitability for isolation		Non	
CE marking		Non	
Page on which characteristics and outline dimensions are shown		7-78	

Notes:
◉ : Standard. This configuration used unless otherwise specified. ○ : Optional standard. Specify when ordering. ● : "yes" or "available". — : "no" or "not available".
② : Supplied as standard. ⑥ : The UVT controller is installed externally, when provided with AC UVT. ⑨ : The mechanical interlock is not applicable to the draw-out type (DR).
㉙ : Required for overcurrent protection. Rated conditional short-circuit current [I_{cc}] will be the same as Rated short-circuit breaking capacity of upstream breaker.
㊸ : Fixed depth, not adjustable.

Molded Case Circuit Breakers

9 TB series for distribution boards

Frame size (A)			50		50		50												
Type			**TB-5S**		**TB-5P**		**TB-5D**												
Number of poles			2		2		2												
■Ratings																			
Rated current, A			10	30	10	30	10	30											
Calibrated at 45°C			15	40	15	40	15	40											
			20	50	20	50	20	50											
Rated voltage V	AC		460		460		250												
	DC		125		125		125												
■Rated breaking capacity, kA																			
NK	AC	250 V	5 ㊹		5 ㊹		5 ㊹												
(sym)		125 V	42		42		42												
	DC	125 V	5		5		5												
■External dimensions, mm																			
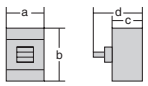	a		50		50		50												
	b		95		74.5		74.5												
	c		60		60		60												
	d		79		79		79												
Weight kg			0.34		0.28		0.28												
■Connecting scheme																			
Front-connected both on the line and load sides			●		—		—												
Plug-in on the line side and front-connected on the load side			—		●		—												
Plug-in both on the line and load sides			—		—		●												
■Mounting scheme (optional)																			
Clip-in chassis			●		—		—												
Single mounting base			—		● ㊼		● ㊼												
Double mounting base			—		● ㊼		● ㊼												
■Accessories (optional)		**Symbol**																	
Toggle holder		H H	●		●		●												
Toggle lock		H L	—		—		—												
Toggle cap		H C	—		—		—												
Interpole barrier		B A	●		●		●												
■Standard specifications																			
Overcurrent trip mechanism			Thermal-magnetic		Thermal-magnetic		Thermal-magnetic												
Trip button (color)			Non		Non		Non												
Handle position indication (ON: Red, OFF: Green)			Non		Non		Non												
Suitability for isolation			Non		Non		Non												
CE marking			Non		Non		Non												
Page on which characteristics and outline dimensions are shown			7-80		7-82		7-84												

Notes:

● : "yes" or "available". — : "no" or "not available".

㊹ : 2.5kA for 10A.

㊼ : Specify the branch bars when ordering.

10 List of breakers for marine use and rated breaking capacities (approved by ship classification societies)

TemBreak2

Frame size	Type	Rated current(A)	Poles	Rated voltage (V)	Rated breaking capacities, kA (sym.) Values enclosed in square brackets "[ ]" represent the making current, kA.							
					N K		L R		A B S		G L	
					I_{cu}	I_{cs}	I_{cu}	I_{cs}	I_{cu}	I_{cs}	I_{cu}	I_{cs}
50	**E50-SF**	10,15,20, 30,40,50	2	AC450	10[18.5]⑬	—	10[18.5]⑬	—	10[18.5]⑬	—	10[18.5]	5[7.65]
			3	AC240	25[53.2]⑭	—	25[53.2]⑭	—	25[53.2]⑭	—	25[52.5]	13[26]
				AC115	42[95.6]⑮	—	42[95.6]⑮	—	42[95.6]⑮	—	42[95.6]③	21[44.1]③
				DC250	7.5[7.5]	—	7.5[7.5]	—	7.5[7.5]	—	7.5[7.5]	—
	E50-CM	0.7,1.4,2, 2.6,4,5,8, 10,12,16,25, 32,40,45	3	AC450	2.5[3.8]⑬	—	2.5[3.8]⑬	—	2.5[3.8]⑬	—	—	—
				AC240	5[8.7]⑭	—	5[8.7]⑭	—	5[8.7]⑭	—	—	—
	S50-SF	15,20,30, 40,50	2	AC690	—	—	—	—	—	—	—	—
			3	AC450	25[54.4]	13[29.6]	25[54.4]	13[29.6]	25[54.4]	13[29.6]	25[54.4]	13[29.6]
				AC240	50[117]	25[56.9]	50[117]	25[56.9]	50[117]	25[56.9]	50[117]	25[56.9]
				DC250	25[25]	13[13]	25[25]	13[13]	25[25]	13[13]	25[25]	13[13]
	S50-GF	15,20,30, 40,50	3	AC690	6[9.29]	6[9.29]	6[9.29]	6[9.29]	6[9.29]	6[9.29]	6[9.29]	6[9.29]
				AC500	—	—	25[52.5]	22[46.2]	25[52.5]	22[46.2]	25[52.5]	22[46.2]
				AC450	50[112]	25[54.4]	50[112]	25[54.4]	50[112]	25[54.4]	50[112]	25[54.4]
				AC415	—	—	65[143]	33[69.3]	65[143]	33[69.3]	65[143]	33[69.3]
				AC240	85[201]	85[201]	85[201]	85[201]	85[201]	85[201]	85[201]	85[201]
				DC250	40[40]	40[40]	40[40]	40[40]	40[40]	40[40]	40[40]	40[40]
	S50-GFL	15,20,30, 40,50	3	AC690	6[9.29]	6[9.29]	6[9.29]	6[9.29]	6[9.29]	6[9.29]	6[9.29]	6[9.29]
				AC500	—	—	25[52.5]	22[46.2]	25[52.5]	22[46.2]	25[52.5]	22[46.2]
				AC450	50[112]	25[54.4]	50[112]	25[54.4]	50[112]	25[54.4]	50[112]	25[54.4]
				AC415	—	—	65[143]	33[69.3]	65[143]	33[69.3]	65[143]	33[69.3]
				AC240	85[201]	85[201]	85[201]	85[201]	85[201]	85[201]	85[201]	85[201]
				DC250	40[40]	40[40]	40[40]	40[40]	40[40]	40[40]	40[40]	40[40]
	S50-GFH	15,20,30, 40,50	3	AC690	6[9.29]	6[9.29]	6[9.29]	6[9.29]	6[9.29]	6[9.29]	6[9.29]	6[9.29]
				AC500	—	—	25[52.5]	22[46.2]	25[52.5]	22[46.2]	25[52.5]	22[46.2]
				AC450	50[112]	25[54.4]	50[112]	25[54.4]	50[112]	25[54.4]	50[112]	25[54.4]
				AC415	—	—	65[143]	33[69.3]	65[143]	33[69.3]	65[143]	33[69.3]
				AC240	85[201]	85[201]	85[201]	85[201]	85[201]	85[201]	85[201]	85[201]
				DC250	40[40]	40[40]	40[40]	40[40]	40[40]	40[40]	40[40]	40[40]
100	**E100-SF**	10,15,20, 30,40,50, 60,75,100	2	AC450	10[18.5]⑬	—	10[17.2]	5[8.4]	10[18.5]⑬	—	10[18.5]	5[7.5]
			3	AC240	25[53.2]⑭	—	25[60.5]	13[26.1]	25[53.2]⑭	—	25[52.5]	13[26]
				AC115	42[95.6]⑮	—	42[97.9]③	—	42[95.6]⑮	—	42[95.6]③	21[44.1]③
				DC250	7.5[7.5]	—	—	—	7.5[7.5]	—	7.5[7.5]	—
	S100-NF	15,20,30, 40,50,60, 75,100	2	AC690	6[9.29]	6[9.29]	6[9.29]	6[9.29]	6[9.29]	6[9.29]	6[9.29]	6[9.29]
			3	AC500	—	—	22[46.2]	22[46.2]	22[46.2]	22[46.2]	22[46.2]	22[46.2]
				AC450	25[54.4]	25[54.4]	25[54.4]	25[54.4]	25[54.4]	25[54.4]	25[54.4]	25[54.4]
				AC415	—	—	30[63]	30[63]	30[63]	30[63]	30[63]	30[63]
				AC240	50[115]	50[115]	50[115]	50[115]	50[115]	50[115]	50[115]	50[115]
				DC250	25[25]	19[19]	25[25]	19[19]	25[25]	19[19]	25[25]	19[19]
	S100-NFL	15,20,30, 40,50,60, 75,100	2	AC690	6[9.29]	6[9.29]	6[9.29]	6[9.29]	6[9.29]	6[9.29]	6[9.29]	6[9.29]
			3	AC500	—	—	22[46.2]	22[46.2]	22[46.2]	22[46.2]	22[46.2]	22[46.2]
				AC450	25[54.4]	25[54.4]	25[54.4]	25[54.4]	25[54.4]	25[54.4]	25[54.4]	25[54.4]
				AC415	—	—	30[63]	30[63]	30[63]	30[63]	30[63]	30[63]
				AC240	50[115]	50[115]	50[115]	50[115]	50[115]	50[115]	50[115]	50[115]
				DC250	25[25]	19[19]	25[25]	19[19]	25[25]	19[19]	25[25]	19[19]
	S100-NFH	15,20,30, 40,50,60, 75,100	2	AC690	6[9.29]	6[9.29]	6[9.29]	6[9.29]	6[9.29]	6[9.29]	6[9.29]	6[9.29]
			3	AC500	—	—	22[46.2]	22[46.2]	22[46.2]	22[46.2]	22[46.2]	22[46.2]
				AC450	25[54.4]	25[54.4]	25[54.4]	25[54.4]	25[54.4]	25[54.4]	25[54.4]	25[54.4]
				AC415	—	—	30[63]	30[63]	30[63]	30[63]	30[63]	30[63]
				AC240	50[115]	50[115]	50[115]	50[115]	50[115]	50[115]	50[115]	50[115]
				DC250	25[25]	19[19]	25[25]	19[19]	25[25]	19[19]	25[25]	19[19]
	S100-NM	16,24,32, 40,45,60, 75,90,100	3	AC450	25[54.4]	25[54.4]	25[54.4]	25[54.4]	25[54.4]	25[54.4]	25[54.4]	25[54.4]
				AC415	—	—	—	—	30[63]	30[63]	—	—
				AC240	50[115]	50[115]	50[115]	50[115]	50[115]	50[115]	50[115]	50[115]
	S100-GF	15,20,30, 40,50,60, 75,100	2	AC690	6[9.29]	6[9.29]	6[9.29]	6[9.29]	6[9.29]	6[9.29]	6[9.29]	6[9.29]
			3	AC500	—	—	25[52.5]	22[46.2]	25[52.5]	22[46.2]	25[52.5]	22[46.2]
				AC450	50[112]	25[54.4]	50[112]	25[54.4]	50[112]	25[54.4]	50[112]	25[54.4]
				AC415	—	—	65[143]	33[69.3]	65[143]	33[69.3]	65[143]	33[69.3]
				AC240	85[201]	85[201]	85[201]	85[201]	85[201]	85[201]	85[201]	85[201]
				DC250	40[40]	40[40]	40[40]	40[40]	40[40]	40[40]	40[40]	40[40]
	S100-GFL	15,20,30, 40,50,60, 75,100	2	AC690	6[9.29]	6[9.29]	6[9.29]	6[9.29]	6[9.29]	6[9.29]	6[9.29]	6[9.29]
			3	AC500	—	—	25[52.5]	22[46.2]	25[52.5]	22[46.2]	25[52.5]	22[46.2]
				AC450	50[112]	25[54.4]	50[112]	25[54.4]	50[112]	25[54.4]	50[112]	25[54.4]
				AC415	—	—	65[143]	33[69.3]	65[143]	33[69.3]	65[143]	33[69.3]
				AC240	85[201]	85[201]	85[201]	85[201]	85[201]	85[201]	85[201]	85[201]
				DC250	40[40]	40[40]	40[40]	40[40]	40[40]	40[40]	40[40]	40[40]

Notes: ① : at 450V AC. ② : at 240V AC. ③ : at 120V AC. ④ : at 660V AC. ⑤ : at 525V AC. ⑦ : at 220V AC.
⑧ : at 110V AC. ⑨ : at 225V AC. ⑩ : at 440V AC. ⑬ : at 500V AC. ⑭ : at 250V AC. ⑮ : at 125V AC.

Molded Case Circuit Breakers

10 List of breakers for marine use and rated breaking capacities (approved by ship classification societies)

TemBreak2

Frame size	Type	Rated current(A)	Poles	Rated voltage (V)	Rated breaking capacities, kA (sym.) Values enclosed in square brackets "[ ]" represent the making current, kA.							
					BV		CCS		KR		RINA	
					I_{cu}	I_{cs}	I_{cu}	I_{cs}	I_{cu}	I_{cs}	I_{cu}	I_{cs}
50	**E50-SF**	10,15,20, 30,40,50	2	AC450	10[17]	5[7.65]	10[18.5]	5[7.65]	10[18.5]⑬	—	—	—
			3	AC240	25[52.5]	13[26]	25[53.2]	13[26]	25[53.2]⑭	—	—	—
				AC115	—	—	42[95.6]⑮	—	42[95.6]⑮	—	—	—
				DC250	—	—	7.5[7.5]	—	7.5[7.5]	—	—	—
	E50-CM	0.7,1.4,2, 2.6,4,5,8, 10,12,16,25, 32,40,45	3	AC450	—	—	—	—	2.5[3.8]⑬	—	—	—
				AC240	—	—	—	—	5[8.7]⑭	—	—	—
	S50-SF	15,20,30, 40,50	2	AC690	—	—	—	—	—	—	—	—
			3	AC450	25[54.4]	13[29.6]	25[54.4]	13[29.6]	25[54.4]	13[29.6]	—	—
				AC240	50[117]	25[56.9]	50[117]	25[56.9]	50[117]	25[56.9]	—	—
				DC250	25[25]	13[13]	25[25]	13[13]	25[25]	13[13]	—	—
	S50-GF	15,20,30, 40,50	3	AC690	6[9.29]	6[9.29]	6[9.29]	6[9.29]	6[9.29]	6[9.29]	—	—
				AC500	25[52.5]	22[46.2]	—	—	25[52.5]	22[46.2]	—	—
				AC450	50[112]	25[54.4]	50[112]	25[54.4]	50[112]	25[54.4]	—	—
				AC415	65[143]	33[69.3]	—	—	65[143]	33[69.3]	—	—
				AC240	85[201]	85[201]	85[201]	85[201]	85[201]	85[201]	—	—
				DC250	40[40]	40[40]	40[40]	40[40]	40[40]	40[40]	—	—
	S50-GFL	15,20,30, 40,50	3	AC690	6[9.29]	6[9.29]	—	—	6[9.29]	6[9.29]	—	—
				AC500	25[52.5]	22[46.2]	—	—	25[52.5]	22[46.2]	—	—
				AC450	50[112]	25[54.4]	—	—	50[112]	25[54.4]	—	—
				AC415	65[143]	33[69.3]	—	—	65[143]	33[69.3]	—	—
				AC240	85[201]	85[201]	—	—	85[201]	85[201]	—	—
				DC250	40[40]	40[40]	—	—	40[40]	40[40]	—	—
	S50-GFH	15,20,30, 40,50	3	AC690	6[9.29]	6[9.29]	—	—	6[9.29]	6[9.29]	—	—
				AC500	25[52.5]	22[46.2]	—	—	25[52.5]	22[46.2]	—	—
				AC450	50[112]	25[54.4]	—	—	50[112]	25[54.4]	—	—
				AC415	65[143]	33[69.3]	—	—	65[143]	33[69.3]	—	—
				AC240	85[201]	85[201]	—	—	85[201]	85[201]	—	—
				DC250	40[40]	40[40]	—	—	40[40]	40[40]	—	—
100	**E100-SF**	10,15,20, 30,40,50, 60,75,100	2	AC450	10[17.2]	5[7.86]	10[18.5]	5[7.65]	10[18.5]⑬	—	—	—
			3	AC240	25[59.0]	13[27.7]	25[53.2]	13[26]	25[53.2]⑭	—	—	—
				AC115	—	—	42[95.6]⑮	—	42[95.6]⑮	—	—	—
				DC250	—	—	7.5[7.5]	—	7.5[7.5]	—	—	—
	S100-NF	15,20,30, 40,50,60, 75,100	2	AC690	6[9.29]	6[9.29]	6[9.29]	6[9.29]	6[9.29]	6[9.29]	6[9]	6[9]
			3	AC500	22[46.2]	22[46.2]	—	—	22[46.2]	22[46.2]	—	—
				AC450	25[54.4]	25[54.4]	25[54.4]	25[54.4]	25[54.4]	25[54.4]	25[52.5]	25[52.5]
				AC415	30[63]	30[63]	—	—	30[63]	30[63]	—	—
				AC240	50[115]	50[115]	50[115]	50[115]	50[115]	50[115]	50[105]	50[105]
				DC250	25[25]	19[19]	25[25]	19[19]	25[25]	19[19]	25[25]	19[19]
	S100-NFL	15,20,30, 40,50,60, 75,100	2	AC690	6[9.29]	6[9.29]	—	—	6[9.29]	6[9.29]	—	—
			3	AC500	22[46.2]	22[46.2]	—	—	22[46.2]	22[46.2]	—	—
				AC450	25[54.4]	25[54.4]	—	—	25[54.4]	25[54.4]	—	—
				AC415	30[63]	30[63]	—	—	30[63]	30[63]	—	—
				AC240	50[115]	50[115]	—	—	50[115]	50[115]	—	—
				DC250	25[25]	19[19]	—	—	25[25]	19[19]	—	—
	S100-NFH	15,20,30, 40,50,60, 75,100	2	AC690	6[9.29]	6[9.29]	—	—	6[9.29]	6[9.29]	—	—
			3	AC500	22[46.2]	22[46.2]	—	—	22[46.2]	22[46.2]	—	—
				AC450	25[54.4]	25[54.4]	—	—	25[54.4]	25[54.4]	—	—
				AC415	30[63]	30[63]	—	—	30[63]	30[63]	—	—
				AC240	50[115]	50[115]	—	—	50[115]	50[115]	—	—
				DC250	25[25]	19[19]	—	—	25[25]	19[19]	—	—
	S100-NM	16,24,32, 40,45,60, 75,90,100	3	AC450	25[54.4]	25[54.4]	—	—	25[54.4]	25[54.4]	—	—
				AC415	—	—	—	—	30[63]	30[63]	—	—
				AC240	50[115]	50[115]	—	—	50[115]	50[115]	—	—
	S100-GF	15,20,30, 40,50,60, 75,100	2	AC690	6[9.29]	6[9.29]	6[9.29]	6[9.29]	6[9.29]	6[9.29]	6[9]	6[9]
			3	AC500	25[52.5]	22[46.2]	—	—	25[52.5]	22[46.2]	—	—
				AC450	50[112]	25[54.4]	50[112]	25[54.4]	50[112]	25[54.4]	50[105]	25[52.5]
				AC415	65[143]	33[69.3]	—	—	65[143]	33[69.3]	—	—
				AC240	85[201]	85[201]	85[201]	85[201]	85[201]	85[201]	85[187]	85[187]
				DC250	40[40]	40[40]	40[40]	40[40]	40[40]	40[40]	40[40]	40[40]
	S100-GFL	15,20,30, 40,50,60, 75,100	2	AC690	6[9.29]	6[9.29]	—	—	6[9.29]	6[9.29]	—	—
			3	AC500	25[52.5]	22[46.2]	—	—	25[52.5]	22[46.2]	—	—
				AC450	50[112]	25[54.4]	—	—	50[112]	25[54.4]	—	—
				AC415	65[143]	33[69.3]	—	—	65[143]	33[69.3]	—	—
				AC240	85[201]	85[201]	—	—	85[201]	85[201]	—	—
				DC250	40[40]	40[40]	—	—	40[40]	40[40]	—	—

Molded Case Circuit Breakers

10 List of breakers for marine use and rated breaking capacities (approved by ship classification societies)

TemBreak2

Frame size	Type	Rated current(A)	Poles	Rated voltage (V)	Rated breaking capacities, kA (sym.) Values enclosed in square brackets "[ ]" represent the making current, kA.							
					NK		LR		ABS		GL	
					I_{cu}	I_{cs}	I_{cu}	I_{cs}	I_{cu}	I_{cs}	I_{cu}	I_{cs}
100	**S100-GFH**	15,20,30, 40,50,60, 75,100	2	AC690	6[9.29]	6[9.29]	6[9.29]	6[9.29]	6[9.29]	6[9.29]	6[9.29]	6[9.29]
			3	AC500	—	—	25[52.5]	22[46.2]	25[52.5]	22[46.2]	25[52.5]	22[46.2]
				AC450	50[112]	25[54.4]	50[112]	25[54.4]	50[112]	25[54.4]	50[112]	25[54.4]
				AC415	—	—	65[143]	33[69.3]	65[143]	33[69.3]	65[143]	33[69.3]
				AC240	85[201]	85[201]	85[201]	85[201]	85[201]	85[201]	85[201]	85[201]
				DC250	40[40]	40[40]	40[40]	40[40]	40[40]	40[40]	40[40]	40[40]
	H100-NF	15,20,30, 40,50,60, 75,100	3	AC690	20[43.0]	15[32.6]	20[43.0]	15[32.6]	20[43.0]	15[32.6]	20[43.0]	15[32.6]
				AC500	—	—	45[94.5]⑤	45[94.5]⑤	45[94.5]	45[94.5]	45[94.5]	45[94.5]
				AC450	120[283]	80[191]	120[283]	80[191]	120[283]	80[191]	120[283]	80[191]
				AC415	—	—	125[275]	85[187]	125[275]	85[187]	125[275]	85[187]
				AC240	150[350]	150[350]	150[350]	150[350]	150[350]	150[350]	150[350]	150[350]
	L100-NF	15,20,30, 40,50,60, 75,100	3	AC690	25[53.8]	20[43.0]	25[53.8]	20[43.0]	25[53.8]	20[43.0]	25[53.8]	20[43.0]
				AC500	—	—	65[143]⑤	65[143]⑤	65[143]	65[143]	65[143]	65[143]
				AC450	180[430]	135[315]	180[430]	135[315]	180[430]	135[315]	180[430]	135[315]
				AC415	200[484]	150[345]	200[484]	150[345]	200[484]	150[345]	200[484]	150[345]
				AC240	200[484]	150[350]	200[484]	150[350]	200[484]	150[350]	200[484]	150[350]
125	**S125-SF**	15,20,30, 40,50,60, 75,100, 125	2	AC690	—	—	—	—	—	—	—	—
			3	AC450	25[54.4]	13[29.6]	25[54.4]	13[29.6]	25[54.4]	13[29.6]	25[54.4]	13[29.6]
				AC240	50[117]	25[56.9]	50[117]	25[56.9]	50[117]	25[56.9]	50[117]	25[56.9]
				DC250	25[25]	13[13]	25[25]	13[13]	25[25]	13[13]	25[25]	13[13]
	S125-NF	125	2	AC690	6[9.29]	6[9.29]	6[9.29]	6[9.29]	6[9.29]	6[9.29]	6[9.29]	6[9.29]
			3	AC500	—	—	22[46.2]	22[46.2]	22[46.2]	22[46.2]	22[46.2]	22[46.2]
				AC450	25[54.4]	25[54.4]	25[54.4]	25[54.4]	25[54.4]	25[54.4]	25[54.4]	25[54.4]
				AC415	—	—	30[63]	30[63]	30[63]	30[63]	30[63]	30[63]
				AC240	50[115]	50[115]	50[115]	50[115]	50[115]	50[115]	50[115]	50[115]
				DC250	25[25]	19[19]	25[25]	19[19]	25[25]	19[19]	25[25]	19[19]
	S125-GF	125	2	AC690	6[9.29]	6[9.29]	6[9.29]	6[9.29]	6[9.29]	6[9.29]	6[9.29]	6[9.29]
			3	AC500	—	—	25[52.5]	22[46.2]	25[52.5]	22[46.2]	25[52.5]	22[46.2]
				AC450	50[112]	25[54.4]	50[112]	25[54.4]	50[112]	25[54.4]	50[112]	25[54.4]
				AC415	—	—	65[143]	33[69.3]	65[143]	33[69.3]	65[143]	33[69.3]
				AC240	85[201]	85[201]	85[201]	85[201]	85[201]	85[201]	85[201]	85[201]
				DC250	40[40]	40[40]	40[40]	40[40]	40[40]	40[40]	40[40]	40[40]
	H125-NF	125	3	AC690	20[43.0]	15[32.6]	20[43.0]	15[32.6]	20[43.0]	15[32.6]	20[43.0]	15[32.6]
				AC500	—	—	45[94.5]⑤	45[94.5]⑤	45[94.5]	45[94.5]	45[94.5]	45[94.5]
				AC450	120[283]	80[191]	120[283]	80[191]	120[283]	80[191]	120[283]	80[191]
				AC415	—	—	125[275]	85[187]	125[275]	85[187]	125[275]	85[187]
				AC240	150[350]	150[350]	150[350]	150[350]	150[350]	150[350]	150[350]	150[350]
	L125-NF	125	3	AC690	25[53.8]	20[43.0]	25[53.8]	20[43.0]	25[53.8]	20[43.0]	25[53.8]	20[43.0]
				AC500	—	—	65[143]⑤	65[143]⑤	65[143]	65[143]	65[143]	65[143]
				AC450	180[430]	135[315]	180[430]	135[315]	180[430]	135[315]	180[430]	135[315]
				AC415	200[484]	150[345]	200[484]	150[345]	200[484]	150[345]	200[484]	150[345]
				AC240	200[484]	150[350]	200[484]	150[350]	200[484]	150[350]	200[484]	150[350]
225	**S225-NF**	125,150, 175,200, 225	2＊	AC690	7.5[13.1]	7.5[13.1]	7.5[13.1]	7.5[13.1]	7.5[13.1]	7.5[13.1]	7.5[13.1]	7.5[13.1]
			3	AC500	—	—	25[52.5]	25[52.5]	25[52.5]	25[52.5]	25[52.5]	25[52.5]
				AC450	25[54.4]	25[54.4]	25[54.4]	25[54.4]	25[54.4]	25[54.4]	25[54.4]	25[54.4]
				AC415	—	—	35[73.5]	35[73.5]	35[73.5]	35[73.5]	35[73.5]	35[73.5]
				AC240	65[148]	65[148]	65[148]	65[148]	65[148]	65[148]	65[148]	65[148]
				DC250	40[40]	40[40]	40[40]	40[40]	40[40]	40[40]	40[40]	40[40]
	S225-NFL	125,150, 175,200, 225	2＊	AC690	7.5[13.1]	7.5[13.1]	7.5[13.1]	7.5[13.1]	7.5[13.1]	7.5[13.1]	7.5[13.1]	7.5[13.1]
			3	AC500	—	—	25[52.5]	25[52.5]	25[52.5]	25[52.5]	25[52.5]	25[52.5]
				AC450	25[54.4]	25[54.4]	25[54.4]	25[54.4]	25[54.4]	25[54.4]	25[54.4]	25[54.4]
				AC415	—	—	35[73.5]	35[73.5]	35[73.5]	35[73.5]	35[73.5]	35[73.5]
				AC240	65[148]	65[148]	65[148]	65[148]	65[148]	65[148]	65[148]	65[148]
				DC250	40[40]	40[40]	40[40]	40[40]	40[40]	40[40]	40[40]	40[40]
	S225-NFH	125,150, 175,200, 225	2＊	AC690	7.5[13.1]	7.5[13.1]	7.5[13.1]	7.5[13.1]	7.5[13.1]	7.5[13.1]	7.5[13.1]	7.5[13.1]
			3	AC500	—	—	25[52.5]	25[52.5]	25[52.5]	25[52.5]	25[52.5]	25[52.5]
				AC450	25[54.4]	25[54.4]	25[54.4]	25[54.4]	25[54.4]	25[54.4]	25[54.4]	25[54.4]
				AC415	—	—	35[73.5]	35[73.5]	35[73.5]	35[73.5]	35[73.5]	35[73.5]
				AC240	65[148]	65[148]	65[148]	65[148]	65[148]	65[148]	65[148]	65[148]
				DC250	40[40]	40[40]	40[40]	40[40]	40[40]	40[40]	40[40]	40[40]
	S225-NM	125,150, 175,225	3	AC450	25[54.4]	25[54.4]	25[54.4]	25[54.4]	25[54.4]	25[54.4]	25[54.4]	25[54.4]
				AC415	—	—	—	—	35[73.5]	35[73.5]	—	—
				AC240	65[148]	65[148]	65[148]	65[148]	65[148]	65[148]	65[148]	65[148]
	S225-GF	125,150, 175,200, 225	2＊	AC690	7.5[13.1]	7.5[13.1]	7.5[13.1]	7.5[13.1]	7.5[13.1]	7.5[13.1]	7.5[13.1]	7.5[13.1]
			3	AC500	—	—	25[52.5]	25[52.5]	25[52.5]	25[52.5]	25[52.5]	25[52.5]
				AC450	50[112]	25[54.4]	50[112]	25[54.4]	50[112]	25[54.4]	50[112]	25[54.4]
				AC415	—	—	65[143]	35[73.5]	65[143]	35[73.5]	65[143]	35[73.5]
				AC240	85[201]	85[201]	85[201]	85[201]	85[201]	85[201]	85[201]	85[201]
				DC250	40[40]	40[40]	40[40]	40[40]	40[40]	40[40]	40[40]	40[40]

Notes: ① : at 450V AC. ② : at 240V AC. ③ : at 120V AC. ④ : at 660V AC. ⑤ : at 525V AC. ⑦ : at 220V AC.
⑧ : at 110V AC. ⑨ : at 225V AC. ⑩ : at 440V AC. ⑬ : at 500V AC. ⑭ : at 250V AC. ⑮ : at 125V AC.
＊2 poles breakers use the terminals of both ends of 3 poles breakers.

10 List of breakers for marine use and rated breaking capacities (approved by ship classification societies)

TemBreak2

Frame size	Type	Rated current(A)	Poles	Rated voltage (V)	Rated breaking capacities, kA (sym.) Values enclosed in square brackets "[ ]" represent the making current, kA.							
					BV		CCS		KR		RINA	
					I_{cu}	I_{cs}	I_{cu}	I_{cs}	I_{cu}	I_{cs}	I_{cu}	I_{cs}
100	**S100-GFH**	15,20,30, 40,50,60, 75,100	2	AC690	6[9.29]	6[9.29]	—	—	6[9.29]	6[9.29]	—	—
			3	AC500	25[52.5]	22[46.2]	—	—	25[52.5]	22[46.2]	—	—
				AC450	50[112]	25[54.4]	—	—	50[112]	25[54.4]	—	—
				AC415	65[143]	33[69.3]	—	—	65[143]	33[69.3]	—	—
				AC240	85[201]	85[201]	—	—	85[201]	85[201]	—	—
				DC250	40[40]	40[40]	—	—	40[40]	40[40]	—	—
	H100-NF	15,20,30, 40,50,60, 75,100	3	AC690	20[43.0]	15[32.6]	20[43.0]	15[32.6]	20[43.0]	15[32.6]	20[40]	15[30]
				AC500	45[94.5]⑤	45[94.5]⑤	—	—	45[94.5]	45[94.5]	—	—
				AC450	120[283]	80[191]	120[283]	80[191]	120[283]	80[191]	120[264]	80[176]
				AC415	125[275]	85[187]	—	—	125[275]	85[187]	—	—
				AC240	150[350]	150[350]	150[350]	150[350]	150[350]	150[350]	150[330]	150[330]
	L100-NF	15,20,30, 40,50,60, 75,100	3	AC690	25[53.8]	20[43.0]	25[53.8]	20[43.0]	25[53.8]	20[43.0]	25[52.5]	19[38]
				AC500	65[143]⑤	65[143]⑤	—	—	65[143]	65[143]	—	—
				AC450	180[430]	135[315]	180[430]	135[315]	180[430]	135[315]	180[396]	135[297]
				AC415	200[484]	150[345]	200[484]	150[345]	200[484]	150[345]	—	—
				AC240	200[484]	150[350]	200[484]	150[350]	200[484]	150[350]	200[440]	150[330]
125	**S125-SF**	15,20,30, 40,50,60, 75,100, 125	2	AC690	—	—	—	—	—	—	—	—
			3	AC450	25[54.4]	13[29.6]	25[54.4]	13[29.6]	25[54.4]	13[29.6]	—	—
				AC240	50[117]	25[56.9]	50[117]	25[56.9]	50[117]	25[56.9]	—	—
				DC250	25[25]	13[13]	25[25]	13[13]	25[25]	13[13]	—	—
	S125-NF	125	2	AC690	6[9.29]	6[9.29]	6[9.29]	6[9.29]	6[9.29]	6[9.29]	—	—
			3	AC500	22[46.2]	22[46.2]	—	—	22[46.2]	22[46.2]	—	—
				AC450	25[54.4]	25[54.4]	25[54.4]	25[54.4]	25[54.4]	25[54.4]	—	—
				AC415	30[63]	30[63]	—	—	30[63]	30[63]	—	—
				AC240	50[115]	50[115]	50[115]	50[115]	50[115]	50[115]	—	—
				DC250	25[25]	19[19]	25[25]	19[19]	25[25]	19[19]	—	—
	S125-GF	125	2	AC690	6[9.29]	6[9.29]	6[9.29]	6[9.29]	6[9.29]	6[9.29]	—	—
			3	AC500	25[52.5]	22[46.2]	—	—	25[52.5]	22[46.2]	—	—
				AC450	50[112]	25[54.4]	50[112]	25[54.4]	50[112]	25[54.4]	—	—
				AC415	65[143]	33[69.3]	—	—	65[143]	33[69.3]	—	—
				AC240	85[201]	85[201]	85[201]	85[201]	85[201]	85[201]	—	—
				DC250	40[40]	40[40]	40[40]	40[40]	40[40]	40[40]	—	—
	H125-NF	125	3	AC690	20[43.0]	15[32.6]	20[43.0]	15[32.6]	20[43.0]	15[32.6]	—	—
				AC500	45[94.5]⑤	45[94.5]⑤	—	—	45[94.5]	45[94.5]	—	—
				AC450	120[283]	80[191]	120[283]	80[191]	120[283]	80[191]	—	—
				AC415	125[275]	85[187]	—	—	125[275]	85[187]	—	—
				AC240	150[350]	150[350]	150[350]	150[350]	150[350]	150[350]	—	—
	L125-NF	125	3	AC690	25[53.8]	20[43.0]	25[53.8]	20[43.0]	25[53.8]	20[43.0]	—	—
				AC500	65[143]⑤	65[143]⑤	—	—	65[143]	65[143]	—	—
				AC450	180[430]	135[315]	180[430]	135[315]	180[430]	135[315]	—	—
				AC415	200[484]	150[345]	200[484]	150[345]	200[484]	150[345]	—	—
				AC240	200[484]	150[350]	200[484]	150[350]	200[484]	150[350]	—	—
225	**S225-NF**	125,150, 175,200, 225	2＊	AC690	7.5[13.1]	7.5[13.1]	7.5[13.1]	7.5[13.1]	7.5[13.1]	7.5[13.1]	7.5[12.75]	7.5[12.75]
			3	AC500	25[52.5]	25[52.5]	—	—	25[52.5]	25[52.5]	—	—
				AC450	25[54.4]	25[54.4]	25[54.4]	25[54.4]	25[54.4]	25[54.4]	25[52.5]	25[52.5]
				AC415	35[73.5]	35[73.5]	—	—	35[73.5]	35[73.5]	—	—
				AC240	65[148]	65[148]	65[148]	65[148]	65[148]	65[148]	65[143]	65[143]
				DC250	40[40]	40[40]	40[40]	40[40]	40[40]	40[40]	40[40]	40[40]
	S225-NFL	125,150, 175,200, 225	2＊	AC690	7.5[13.1]	7.5[13.1]	—	—	7.5[13.1]	7.5[13.1]	—	—
			3	AC500	25[52.5]	25[52.5]	—	—	25[52.5]	25[52.5]	—	—
				AC450	25[54.4]	25[54.4]	—	—	25[54.4]	25[54.4]	—	—
				AC415	35[73.5]	35[73.5]	—	—	35[73.5]	35[73.5]	—	—
				AC240	65[148]	65[148]	—	—	65[148]	65[148]	—	—
				DC250	40[40]	40[40]	—	—	40[40]	40[40]	—	—
	S225-NFH	125,150, 175,200, 225	2＊	AC690	7.5[13.1]	7.5[13.1]	—	—	7.5[13.1]	7.5[13.1]	—	—
			3	AC500	25[52.5]	25[52.5]	—	—	25[52.5]	25[52.5]	—	—
				AC450	25[54.4]	25[54.4]	—	—	25[54.4]	25[54.4]	—	—
				AC415	35[73.5]	35[73.5]	—	—	35[73.5]	35[73.5]	—	—
				AC240	65[148]	65[148]	—	—	65[148]	65[148]	—	—
				DC250	40[40]	40[40]	—	—	40[40]	40[40]	—	—
	S225-NM	125,150, 175,225	3	AC450	25[54.4]	25[54.4]	—	—	25[54.4]	25[54.4]	—	—
				AC415	—	—	—	—	35[73.5]	35[73.5]	—	—
				AC240	65[148]	65[148]	—	—	65[148]	65[148]	—	—
	S225-GF	125,150, 175,200, 225	2＊	AC690	7.5[13.1]	7.5[13.1]	7.5[13.1]	7.5[13.1]	7.5[13.1]	7.5[13.1]	7.5[12.75]	7.5[12.75]
			3	AC500	25[52.5]	25[52.5]	—	—	25[52.5]	25[52.5]	—	—
				AC450	50[112]	25[54.4]	50[112]	25[54.4]	50[112]	25[54.4]	50[105]	25[52.5]
				AC415	65[143]	35[73.5]	—	—	65[143]	35[73.5]	—	—
				AC240	85[201]	85[201]	85[201]	85[201]	85[201]	85[201]	85[187]	85[187]
				DC250	40[40]	40[40]	40[40]	40[40]	40[40]	40[40]	40[40]	40[40]

10 List of breakers for marine use and rated breaking capacities (approved by ship classification societies)

TemBreak2

Frame size	Type	Rated current(A)	Poles	Rated voltage (V)	Rated breaking capacities, kA (sym.) Values enclosed in square brackets "[ ]" represent the making current, kA.							
					N K		L R		A B S		G L	
					I_{cu}	I_{cs}	I_{cu}	I_{cs}	I_{cu}	I_{cs}	I_{cu}	I_{cs}
225	**S225-GFL**	125,150, 175,200, 225	2＊ 3	AC690	7.5[13.1]	7.5[13.1]	7.5[13.1]	7.5[13.1]	7.5[13.1]	7.5[13.1]	7.5[13.1]	7.5[13.1]
				AC500	—	—	25[52.5]	25[52.5]	25[52.5]	25[52.5]	25[52.5]	25[52.5]
				AC450	50[112]	25[54.4]	50[112]	25[54.4]	50[112]	25[54.4]	50[112]	25[54.4]
				AC415	—	—	65[143]	35[73.5]	65[143]	35[73.5]	65[143]	35[73.5]
				AC240	85[201]	85[201]	85[201]	85[201]	85[201]	85[201]	85[201]	85[201]
				DC250	40[40]	40[40]	40[40]	40[40]	40[40]	40[40]	40[40]	40[40]
	S225-GFH	125,150, 175,200, 225	2＊ 3	AC690	7.5[13.1]	7.5[13.1]	7.5[13.1]	7.5[13.1]	7.5[13.1]	7.5[13.1]	7.5[13.1]	7.5[13.1]
				AC500	—	—	25[52.5]	25[52.5]	25[52.5]	25[52.5]	25[52.5]	25[52.5]
				AC450	50[112]	25[54.4]	50[112]	25[54.4]	50[112]	25[54.4]	50[112]	25[54.4]
				AC415	—	—	65[143]	35[73.5]	65[143]	35[73.5]	65[143]	35[73.5]
				AC240	85[201]	85[201]	85[201]	85[201]	85[201]	85[201]	85[201]	85[201]
				DC250	40[40]	40[40]	40[40]	40[40]	40[40]	40[40]	40[40]	40[40]
	S225-GE	125～225 (125,150, 175,200,225)	3	AC690	—	—	—	—	—	—	7.5[13.1]	7.5[13.1]
				AC450	—	—	—	—	—	—	50[121]	25[54.4]
				AC240	—	—	—	—	—	—	85[211]	85[211]
	H225-NF	125,150, 175,200, 225	3	AC690	20[43.0]	15[32.6]	20[43.0]	15[32.6]	20[43.0]	15[32.6]	20[43.0]	15[32.6]
				AC500	—	—	45[94.5]⑤	45[94.5]⑤	45[94.5]	45[94.5]	45[94.5]	45[94.5]
				AC450	120[283]	80[191]	120[283]	80[191]	120[283]	80[191]	120[283]	80[191]
				AC415	—	—	125[275]	85[187]	125[275]	85[187]	125[275]	85[187]
				AC240	150[350]	150[350]	150[350]	150[350]	150[350]	150[350]	150[350]	150[350]
	L225-NF	125,150, 175,200, 225	3	AC690	25[53.8]	20[43.0]	25[53.8]	20[43.0]	25[53.8]	20[43.0]	25[53.8]	20[43.0]
				AC500	—	—	65[143]⑤	65[143]⑤	65[143]	65[143]	65[143]	65[143]
				AC450	180[430]	135[315]	180[430]	135[315]	180[430]	135[315]	180[430]	135[315]
				AC415	200[484]	150[345]	200[484]	150[345]	200[484]	150[345]	200[484]	150[345]
				AC240	200[484]	150[350]	200[484]	150[350]	200[484]	150[350]	200[484]	150[350]
250	**E250-SF**	125,150, 175,200, 225,250	2＊ 3	AC690	—	—	—	—	—	—	—	—
				AC450	15[32.6]	12[27.3]	15[32.6]	12[27.3]	15[32.6]	12[27.3]	15[32.6]	12[27.3]
				AC240	35[83.6]	27[62.2]	35[83.6]	27[62.2]	35[83.6]	27[62.2]	35[83.6]	27[62.2]
				DC250	—	—	—	—	—	—	—	—
	S250-NF	250	2＊ 3	AC690	7.5[13.1]	7.5[13.1]	7.5[13.1]	7.5[13.1]	7.5[13.1]	7.5[13.1]	7.5[13.1]	7.5[13.1]
				AC500	—	—	25[52.5]	25[52.5]	25[52.5]	25[52.5]	25[52.5]	25[52.5]
				AC450	25[54.4]	25[54.4]	25[54.4]	25[54.4]	25[54.4]	25[54.4]	25[54.4]	25[54.4]
				AC415	—	—	35[73.5]	35[73.5]	36[75.6]	36[75.6]	35[73.5]	35[73.5]
				AC240	65[148]	65[148]	65[148]	65[148]	65[148]	65[148]	65[148]	65[148]
				DC250	40[40]	40[40]	40[40]	40[40]	40[40]	40[40]	40[40]	40[40]
	S250-SF	125,150, 175,200, 225,250	2＊ 3	AC690	—	—	—	—	—	—	—	—
				AC450	30[70.8]	15[32.6]	30[70.8]	15[32.6]	30[70.8]	15[32.6]	30[70.8]	15[32.6]
				AC240	85[211]	43[103]	85[211]	43[103]	85[211]	43[103]	85[211]	43[103]
				DC250	25[25]	13[13]	25[25]	13[13]	25[25]	13[13]	25[25]	13[13]
	S250-GF	250	2＊ 3	AC690	7.5[13.1]	7.5[13.1]	7.5[13.1]	7.5[13.1]	7.5[13.1]	7.5[13.1]	7.5[13.1]	7.5[13.1]
				AC500	—	—	25[52.5]	25[52.5]	25[52.5]	25[52.5]	25[52.5]	25[52.5]
				AC450	50[112]	25[54.4]	50[112]	25[54.4]	50[112]	25[54.4]	50[112]	25[54.4]
				AC415	—	—	65[143]	35[73.5]	65[143]	36[75.6]	65[143]	35[73.5]
				AC240	85[201]	85[201]	85[201]	85[201]	85[201]	85[201]	85[201]	85[201]
				DC250	40[40]	40[40]	40[40]	40[40]	40[40]	40[40]	40[40]	40[40]
400	**S400-CF**	125,150, 175,200, 225,250, 300,350, 400	3	AC690	15[32.6]	15[32.6]	15[32.6]	15[32.6]	15[32.6]	15[32.6]	15[32.6]	15[32.6]
				AC450	30[70.8]	30[70.8]	30[70.8]	30[70.8]	30[70.8]	30[70.8]	30[70.8]	30[70.8]
				AC415	—	—	36[75.6]	36[75.6]	36[75.6]	36[75.6]	36[75.6]	36[75.6]
				AC240	50[121]	50[121]	50[121]	50[121]	50[121]	50[121]	50[121]	50[121]
				DC250	40[40]	40[40]	40[40]	40[40]	40[40]	40[40]	40[40]	40[40]
	S400-NF	125,150, 175,200, 225,250, 300,350, 400	3	AC690	20[43.0]	15[32.6]	20[43.0]	15[32.6]	20[43.0]	15[32.6]	20[43.0]	15[32.6]
				AC450	45[109]	45[109]	45[109]	45[109]	45[109]	45[109]	45[109]	45[109]
				AC415	—	—	50[105]	50[105]	50[105]	50[105]	50[105]	50[105]
				AC240	85[211]	85[211]	85[211]	85[211]	85[211]	85[211]	85[211]	85[211]
				DC250	—	—	40[40]	40[40]	40[40]	40[40]	40[40]	40[40]
	S400-NE	100～400 (125,150, 175,200, 225,250, 300,350,400)	3	AC690	20[43.0]	15[32.6]	20[43.0]	15[32.6]	20[43.0]	15[32.6]	20[43.0]	15[32.6]
				AC525	—	—	30[63]	30[63]	30[63]	30[63]	30[63]	30[63]
				AC450	45[109]	45[109]	45[109]	45[109]	45[109]	45[109]	45[109]	45[109]
				AC415	—	—	50[105]	50[105]	50[105]	50[105]	50[105]	50[105]
				AC240	85[211]	85[211]	85[211]	85[211]	85[211]	85[211]	85[211]	85[211]
	S400-NEH	100～400 (125,150, 175,200, 225,250, 300,350,400)	3	AC690	20[43.0]	15[32.6]	20[43.0]	15[32.6]	20[43.0]	15[32.6]	20[43.0]	15[32.6]
				AC525	—	—	30[63]	30[63]	30[63]	30[63]	30[63]	30[63]
				AC450	45[109]	45[109]	45[109]	45[109]	45[109]	45[109]	45[109]	45[109]
				AC415	—	—	50[105]	50[105]	50[105]	50[105]	50[105]	50[105]
				AC240	85[211]	85[211]	85[211]	85[211]	85[211]	85[211]	85[211]	85[211]

Notes: ① : at 450V AC. ② : at 240V AC. ③ : at 120V AC. ④ : at 660V AC. ⑤ : at 525V AC. ⑦ : at 220V AC.
⑧ : at 110V AC. ⑨ : at 225V AC. ⑩ : at 440V AC. ⑬ : at 500V AC. ⑭ : at 250V AC. ⑮ : at 125V AC.
＊2 poles breakers use the terminals of both ends of 3 poles breakers.

Molded Case Circuit Breakers

10 List of breakers for marine use and rated breaking capacities (approved by ship classification societies)

TemBreak2

Frame size	Type	Rated current(A)	Poles	Rated voltage (V)	Rated breaking capacities, kA (sym.) Values enclosed in square brackets "[ ]" represent the making current, kA.							
					BV		CCS		KR		RINA	
					I_{cu}	I_{cs}	I_{cu}	I_{cs}	I_{cu}	I_{cs}	I_{cu}	I_{cs}
225	**S225-GFL**	125,150, 175,200, 225	2＊ 3	AC690	7.5[13.1]	7.5[13.1]	—	—	7.5[13.1]	7.5[13.1]	—	—
				AC500	25[52.5]	25[52.5]	—	—	25[52.5]	25[52.5]	—	—
				AC450	50[112]	25[54.4]	—	—	50[112]	25[54.4]	—	—
				AC415	65[143]	35[73.5]	—	—	65[143]	35[73.5]	—	—
				AC240	85[201]	85[201]	—	—	85[201]	85[201]	—	—
				DC250	40[40]	40[40]	—	—	40[40]	40[40]	—	—
	S225-GFH	125,150, 175,200, 225	2＊ 3	AC690	7.5[13.1]	7.5[13.1]	—	—	7.5[13.1]	7.5[13.1]	—	—
				AC500	25[52.5]	25[52.5]	—	—	25[52.5]	25[52.5]	—	—
				AC450	50[112]	25[54.4]	—	—	50[112]	25[54.4]	—	—
				AC415	65[143]	35[73.5]	—	—	65[143]	35[73.5]	—	—
				AC240	85[201]	85[201]	—	—	85[201]	85[201]	—	—
				DC250	40[40]	40[40]	—	—	40[40]	40[40]	—	—
	S225-GE	125～225 (125,150, 175,200,225)	3	AC690	—	—	—	—	—	—	—	—
				AC450	—	—	—	—	—	—	—	—
				AC240	—	—	—	—	—	—	—	—
	H225-NF	125,150, 175,200, 225	3	AC690	20[43.0]	15[32.6]	20[43.0]	15[32.6]	20[43.0]	15[32.6]	20[40]	15[30]
				AC500	45[94.5]⑤	45[94.5]⑤	—	—	45[94.5]	45[94.5]	—	—
				AC450	120[283]	80[191]	120[283]	80[191]	120[283]	80[191]	120[264]	80[176]
				AC415	125[275]	85[187]	—	—	125[275]	85[187]	—	—
				AC240	150[350]	150[350]	150[350]	150[350]	150[350]	150[350]	150[330]	150[330]
	L225-NF	125,150, 175,200, 225	3	AC690	25[53.8]	20[43.0]	25[53.8]	20[43.0]	25[53.8]	20[43.0]	25[52.5]	19[38]
				AC500	65[143]⑤	65[143]⑤	—	—	65[143]	65[143]	—	—
				AC450	180[430]	135[315]	180[430]	135[315]	180[430]	135[315]	180[396]	135[297]
				AC415	200[484]	150[345]	200[484]	150[345]	200[484]	150[345]	—	—
				AC240	200[484]	150[350]	200[484]	150[350]	200[484]	150[350]	200[440]	150[330]
250	**E250-SF**	125,150, 175,200, 225,250	2＊ 3	AC690	—	—	—	—	—	—	—	—
				AC450	15[32.6]	12[27.3]	15[32.6]	12[27.3]	15[32.6]	12[27.3]	—	—
				AC240	35[83.6]	27[62.2]	35[83.6]	27[62.2]	35[83.6]	27[62.2]	—	—
				DC250	—	—	—	—	—	—	—	—
	S250-NF	250	2＊ 3	AC690	7.5[13.1]	7.5[13.1]	7.5[13.1]	7.5[13.1]	7.5[13.1]	7.5[13.1]	—	—
				AC500	25[52.5]	25[52.5]	—	—	25[52.5]	25[52.5]	—	—
				AC450	25[54.4]	25[54.4]	25[54.4]	25[54.4]	25[54.4]	25[54.4]	—	—
				AC415	35[73.5]	35[73.5]	—	—	36[75.6]	36[75.6]	—	—
				AC240	65[148]	65[148]	65[148]	65[148]	65[148]	65[148]	—	—
				DC250	40[40]	40[40]	40[40]	40[40]	40[40]	40[40]	—	—
	S250-SF	125,150, 175,200, 225,250	2＊ 3	AC690	—	—	—	—	—	—	—	—
				AC450	30[70.8]	15[32.6]	30[70.8]	15[32.6]	30[70.8]	15[32.6]	—	—
				AC240	85[211]	43[103]	85[211]	43[103]	85[211]	43[103]	—	—
				DC250	25[25]	13[13]	25[25]	13[13]	25[25]	13[13]	—	—
	S250-GF	250	2＊ 3	AC690	7.5[13.1]	7.5[13.1]	7.5[13.1]	7.5[13.1]	7.5[13.1]	7.5[13.1]	—	—
				AC500	25[52.5]	25[52.5]	—	—	25[52.5]	25[52.5]	—	—
				AC450	50[112]	25[54.4]	50[112]	25[54.4]	50[112]	25[54.4]	—	—
				AC415	65[143]	35[73.5]	—	—	65[143]	36[75.6]	—	—
				AC240	85[201]	85[201]	85[201]	85[201]	85[201]	85[201]	—	—
				DC250	40[40]	40[40]	40[40]	40[40]	40[40]	40[40]	—	—
400	**S400-CF**	125,150, 175,200, 225,250, 300,350, 400	3	AC690	15[32.6]	15[32.6]	15[32.6]	15[32.6]	15[32.6]	15[32.6]	—	—
				AC450	30[70.8]	30[70.8]	30[70.8]	30[70.8]	30[70.8]	30[70.8]	—	—
				AC415	36[75.6]	36[75.6]	—	—	—	—	—	—
				AC240	50[121]	50[121]	50[121]	50[121]	50[121]	50[121]	—	—
				DC250	40[40]	40[40]	40[40]	40[40]	40[40]	40[40]	—	—
	S400-NF	125,150, 175,200, 225,250, 300,350, 400	3	AC690	20[43.0]	15[32.6]	20[43.0]	15[32.6]	20[43.0]	15[32.6]	20[40]	15[30]
				AC450	45[109]	45[109]	45[109]	45[109]	45[109]	45[109]	45[94.5]	45[94.5]
				AC415	50[105]	50[105]	—	—	—	—	—	—
				AC240	85[211]	85[211]	85[211]	85[211]	85[211]	85[211]	85[187]	85[187]
				DC250	40[40]	40[40]	—	—	—	—	40[40]	40[40]
	S400-NE	100～400 (125,150, 175,200, 225,250, 300,350,400)	3	AC690	20[43.0]	15[32.6]	20[43.0]	15[32.6]	20[43.0]	15[32.6]	—	—
				AC525	30[63]	30[63]	—	—	—	—	—	—
				AC450	45[109]	45[109]	45[109]	45[109]	45[109]	45[109]	—	—
				AC415	50[105]	50[105]	—	—	—	—	—	—
				AC240	85[211]	85[211]	85[211]	85[211]	85[211]	85[211]	—	—
	S400-NEH	100～400 (125,150, 175,200, 225,250, 300,350,400)	3	AC690	20[43.0]	15[32.6]	—	—	20[43.0]	15[32.6]	—	—
				AC525	30[63]	30[63]	—	—	—	—	—	—
				AC450	45[109]	45[109]	—	—	45[109]	45[109]	—	—
				AC415	50[105]	50[105]	—	—	—	—	—	—
				AC240	85[211]	85[211]	—	—	85[211]	85[211]	—	—

10 List of breakers for marine use and rated breaking capacities (approved by ship classification societies)

TemBreak2

Frame size	Type	Rated current(A)	Poles	Rated voltage (V)	Rated breaking capacities, kA (sym.) Values enclosed in square brackets "[ ]" represent the making current, kA.							
					N K		L R		A B S		G L	
					I_{cu}	I_{cs}	I_{cu}	I_{cs}	I_{cu}	I_{cs}	I_{cu}	I_{cs}
400	**S400-GF**	125,150, 175,200, 225,250, 300,350, 400	3	AC690	20[43.0]	15[32.6]	20[43.0]	15[32.6]	20[43.0]	15[32.6]	20[43.0]	15[32.6]
				AC450	65[157]	50[121]	65[157]	50[121]	65[157]	50[121]	65[157]	50[121]
				AC415	—	—	70[154]	50[105]	70[154]	50[105]	70[154]	50[105]
				AC240	100[233]	85[211]	100[233]	85[211]	100[233]	85[211]	100[233]	85[211]
				DC250	—	—	40[40]	40[40]	40[40]	40[40]	40[40]	40[40]
	S400-GE	100～400 (125,150, 175,200, 225,250, 300,350,400)	3	AC690	20[43.0]	15[32.6]	20[43.0]	15[32.6]	20[43.0]	15[32.6]	20[43.0]	15[32.6]
				AC525	—	—	30[63]	30[63]	30[63]	30[63]	30[63]	30[63]
				AC450	65[157]	50[121]	65[157]	50[121]	65[157]	50[121]	65[157]	50[121]
				AC415	—	—	70[154]	50[105]	70[154]	50[105]	70[154]	50[105]
				AC240	100[233]	85[211]	100[233]	85[211]	100[233]	85[211]	100[233]	85[211]
	S400-GEH	100～400 (125,150, 175,200, 225,250, 300,350,400)	3	AC690	20[43.0]	15[32.6]	20[43.0]	15[32.6]	20[43.0]	15[32.6]	20[43.0]	15[32.6]
				AC525	—	—	30[63]	30[63]	30[63]	30[63]	30[63]	30[63]
				AC450	65[157]	50[121]	65[157]	50[121]	65[157]	50[121]	65[157]	50[121]
				AC415	—	—	70[154]	50[105]	70[154]	50[105]	70[154]	50[105]
				AC240	100[233]	85[211]	100[233]	85[211]	100[233]	85[211]	100[233]	85[211]
	S400-PF	250,300, 350,400	3	AC690	20[43.0]	15[32.6]	20[43.0]	15[32.6]	20[43.0]	15[32.6]	20[43.0]	15[32.6]
				AC525	—	—	30[63]	30[63]	30[63]	30[63]	30[63]	30[63]
				AC450	80[191]	80[191]	80[191]	80[191]	80[191]	80[191]	80[191]	80[191]
				AC415	—	—	85[187]	85[187]	85[187]	85[187]	85[187]	85[187]
				AC240	100[233]	85[211]	100[233]	85[211]	100[233]	85[211]	100[233]	85[211]
				DC250	—	—	—	—	—	—	—	—
	S400-PE	100～400 (125,150, 175,200, 225,250, 300,350,400)	3	AC690	20[43.0]	15[32.6]	20[43.0]	15[32.6]	20[43.0]	15[32.6]	20[43.0]	15[32.6]
				AC525	—	—	30[63]	30[63]	30[63]	30[63]	30[63]	30[63]
				AC450	80[191]	80[191]	80[191]	80[191]	80[191]	80[191]	80[191]	80[191]
				AC415	—	—	85[187]	85[187]	85[187]	85[187]	85[187]	85[187]
				AC240	100[233]	85[211]	100[233]	85[211]	100[233]	85[211]	100[233]	85[211]
	H400-NE	100～400 (125,150, 175,200, 225,250, 300,350,400)	3	AC690	35[77.8]	35[77.8]	35[77.8]	35[77.8]	35[77.8]	35[77.8]	35[77.8]	35[77.8]
				AC525	—	—	45[94.5]	45[94.5]	45[94.5]	45[94.5]	45[94.5]	45[94.5]
				AC450	120[283]	80[191]	120[283]	80[191]	120[283]	80[191]	120[283]	80[191]
				AC415	—	—	125[275]	85[187]	125[275]	85[187]	125[275]	85[187]
				AC240	150[350]	150[350]	150[350]	150[350]	150[350]	150[350]	150[350]	150[350]
	L400-NE	100～400 (125,150, 175,200, 225,250, 300,350,400)	3	AC690	50[115]	50[115]	50[115]	50[115]	50[115]	50[115]	50[115]	50[115]
				AC525	—	—	65[143]	65[143]	65[143]	65[143]	65[143]	65[143]
				AC450	180[430]	135[315]	180[430]	135[315]	180[430]	135[315]	180[430]	135[315]
				AC415	200[484]	150[345]	200[484]	150[345]	200[484]	150[345]	200[484]	150[345]
				AC240	200[484]	150[350]	200[484]	150[350]	200[484]	150[350]	200[484]	150[350]
630	**S630-CF**	500,600, 630	3	AC690	10[21.1]	10[21.1]	10[21.1]	10[21.1]	10[21.1]	10[21.1]	10[21.1]	10[21.1]
				AC525	—	—	15[30]	15[30]	15[30]	15[30]	15[30]	15[30]
				AC450	30[70.8]	30[70.8]	30[70.8]	30[70.8]	30[70.8]	30[70.8]	30[70.8]	30[70.8]
				AC415	—	—	36[75.6]	36[75.6]	36[75.6]	36[75.6]	36[75.6]	36[75.6]
				AC240	50[117]	50[117]	50[117]	50[117]	50[117]	50[117]	50[117]	50[117]
				DC250	—	—	—	—	—	—	—	—
	S630-NF	500,600, 630	3	AC690	20[43.0]	20[43.0]	20[43.0]	20[43.0]	20[43.0]	20[43.0]	20[43.0]	20[43.0]
				AC525	—	—	30[63]	30[63]	30[63]	30[63]	30[63]	30[63]
				AC450	50[121]	50[121]	50[121]	50[121]	50[121]	50[121]	50[121]	50[121]
				AC415	—	—	50[105]	50[105]	50[105]	50[105]	50[105]	50[105]
				AC240	85[211]	85[211]	85[211]	85[211]	85[211]	85[211]	85[211]	85[211]
				DC250	—	—	—	—	—	—	—	—
	S630-NE	250～630 (250,300, 350,400, 500,600,630)	3	AC690	20[43.0]	20[43.0]	20[43.0]	20[43.0]	20[43.0]	20[43.0]	20[43.0]	20[43.0]
				AC525	—	—	30[63]	30[63]	30[63]	30[63]	30[63]	30[63]
				AC450	50[121]	50[121]	50[121]	50[121]	50[121]	50[121]	50[121]	50[121]
				AC415	—	—	50[105]	50[105]	50[105]	50[105]	50[105]	50[105]
				AC240	85[211]	85[211]	85[211]	85[211]	85[211]	85[211]	85[211]	85[211]
	S630-NEH	250～630 (250,300, 350,400, 500,600,630)	3	AC690	20[43.0]	20[43.0]	20[43.0]	20[43.0]	20[43.0]	20[43.0]	20[43.0]	20[43.0]
				AC525	—	—	30[63]	30[63]	30[63]	30[63]	30[63]	30[63]
				AC450	50[121]	50[121]	50[121]	50[121]	50[121]	50[121]	50[121]	50[121]
				AC415	—	—	50[105]	50[105]	50[105]	50[105]	50[105]	50[105]
				AC240	85[211]	85[211]	85[211]	85[211]	85[211]	85[211]	85[211]	85[211]
	H630-NE	250～630 (250,300, 350,400, 500,600,630)	3	AC690	25[53.8]	20[43.0]	25[53.8]	20[43.0]	25[53.8]	20[43.0]	25[53.8]	20[43.0]
				AC525	—	—	45[94.5]	34[71.4]	45[94.5]	34[71.4]	45[94.5]	34[71.4]
				AC450	125[295]	94[225]	125[295]	94[225]	125[295]	94[225]	125[295]	94[225]
				AC415	—	—	125[275]	94[206.8]	125[275]	94[206.8]	125[275]	94[206.8]
				AC240	150[350]	150[350]	150[350]	150[350]	150[350]	150[350]	150[350]	150[350]
	L630-NE	250～630 (250,300, 350,400, 500,600,630)	3	AC690	25[53.8]	20[43.0]	25[53.8]	20[43.0]	25[53.8]	20[43.0]	25[53.8]	20[43.0]
				AC525	—	—	45[94.5]	34[71.4]	45[94.5]	34[71.4]	45[94.5]	34[71.4]
				AC450	180[430]	135[315]	180[430]	135[315]	180[430]	135[315]	180[430]	135[315]
				AC415	—	—	200[440]	150[330]	200[440]	150[330]	200[440]	150[330]
				AC240	200[484]	150[350]	200[484]	150[350]	200[484]	150[350]	200[484]	150[350]

Notes: ① : at 450V AC. ② : at 240V AC. ③ : at 120V AC. ④ : at 660V AC. ⑤ : at 525V AC. ⑦ : at 220V AC.
⑧ : at 110V AC. ⑨ : at 225V AC. ⑩ : at 440V AC. ⑬ : at 500V AC. ⑭ : at 250V AC. ⑮ : at 125V AC.

Molded Case Circuit Breakers

10 List of breakers for marine use and rated breaking capacities (approved by ship classification societies)

TemBreak2

Frame size	Type	Rated current(A)	Poles	Rated voltage (V)	Rated breaking capacities, kA (sym.) Values enclosed in square brackets "[ ]" represent the making current, kA.							
					BV		CCS		KR		RINA	
					I_{cu}	I_{cs}	I_{cu}	I_{cs}	I_{cu}	I_{cs}	I_{cu}	I_{cs}
400	**S400-GF**	125,150, 175,200, 225,250, 300,350, 400	3	AC690	20[43.0]	15[32.6]	20[43.0]	15[32.6]	20[43.0]	15[32.6]	20[40]	15[30]
				AC450	65[157]	50[121]	65[157]	50[121]	65[157]	50[121]	65[143]	49[102.9]
				AC415	70[154]	50[105]	—	—	—	—	—	—
				AC240	100[233]	85[211]	100[233]	85[211]	100[233]	85[211]	100[220]	75[165]
				DC250	40[40]	40[40]	—	—	—	—	40[40]	40[40]
	S400-GE	100～400 (125,150, 175,200, 225,250, 300,350,400)	3	AC690	20[43.0]	15[32.6]	20[43.0]	15[32.6]	20[43.0]	15[32.6]	—	—
				AC525	30[63]	30[63]	—	—	—	—	—	—
				AC450	65[157]	50[121]	65[157]	50[121]	65[157]	50[121]	—	—
				AC415	70[154]	50[105]	—	—	—	—	—	—
				AC240	100[233]	85[211]	100[233]	85[211]	100[233]	85[211]	—	—
	S400-GEH	100～400 (125,150, 175,200, 225,250, 300,350,400)	3	AC690	20[43.0]	15[32.6]	—	—	20[43.0]	15[32.6]	—	—
				AC525	30[63]	30[63]	—	—	—	—	—	—
				AC450	65[157]	50[121]	—	—	65[157]	50[121]	—	—
				AC415	70[154]	50[105]	—	—	—	—	—	—
				AC240	100[233]	85[211]	—	—	100[233]	85[211]	—	—
	S400-PF	250,300, 350,400	3	AC690	20[43.0]	15[32.6]	20[43.0]	15[32.6]	20[43.0]	15[32.6]	—	—
				AC525	30[63]	30[63]	—	—	30[63]	30[63]	—	—
				AC450	80[191]	80[191]	80[191]	80[191]	80[191]	80[191]	—	—
				AC415	85[187]	85[187]	—	—	85[187]	85[187]	—	—
				AC240	100[233]	85[211]	100[233]	85[211]	100[233]	85[211]	—	—
				DC250	—	—	—	—	—	—	—	—
	S400-PE	100～400 (125,150, 175,200, 225,250, 300,350,400)	3	AC690	20[43.0]	15[32.6]	20[43.0]	15[32.6]	20[43.0]	15[32.6]	—	—
				AC525	30[63]	30[63]	—	—	30[63]	30[63]	—	—
				AC450	80[191]	80[191]	80[191]	80[191]	80[191]	80[191]	—	—
				AC415	85[187]	85[187]	—	—	85[187]	85[187]	—	—
				AC240	100[233]	85[211]	100[233]	85[211]	100[233]	85[211]	—	—
	H400-NE	100～400 (125,150, 175,200, 225,250, 300,350,400)	3	AC690	35[77.8]	35[77.8]	35[77.8]	35[77.8]	35[77.8]	35[77.8]	—	—
				AC525	45[94.5]	45[94.5]	—	—	—	—	—	—
				AC450	120[283]	80[191]	120[283]	80[191]	120[283]	80[191]	—	—
				AC415	125[275]	85[187]	—	—	—	—	—	—
				AC240	150[350]	150[350]	150[350]	150[350]	150[350]	150[350]	—	—
	L400-NE	100～400 (125,150, 175,200, 225,250, 300,350,400)	3	AC690	50[115]	50[115]	50[115]	50[115]	50[115]	50[115]	—	—
				AC525	65[143]	65[143]	—	—	—	—	—	—
				AC450	180[430]	135[315]	180[430]	135[315]	180[430]	135[315]	—	—
				AC415	200[484]	150[345]	200[484]	150[345]	200[484]	150[345]	—	—
				AC240	200[484]	150[350]	200[484]	150[350]	200[484]	150[350]	—	—
630	**S630-CF**	500,600, 630	3	AC690	10[21.1]	10[21.1]	10[21.1]	10[21.1]	10[21.1]	10[21.1]	—	—
				AC525	15[30]	15[30]	—	—	15[30]	15[30]	—	—
				AC450	30[70.8]	30[70.8]	30[70.8]	30[70.8]	30[70.8]	30[70.8]	—	—
				AC415	36[75.6]	36[75.6]	—	—	36[75.6]	36[75.6]	—	—
				AC240	50[117]	50[117]	50[117]	50[117]	50[117]	50[117]	—	—
				DC250	—	—	—	—	—	—	—	—
	S630-NF	500,600, 630	3	AC690	20[43.0]	20[43.0]	20[43.0]	20[43.0]	20[43.0]	20[43.0]	—	—
				AC525	30[63]	30[63]	—	—	30[63]	30[63]	—	—
				AC450	50[121]	50[121]	50[121]	50[121]	50[121]	50[121]	—	—
				AC415	50[105]	50[105]	—	—	50[105]	50[105]	—	—
				AC240	85[211]	85[211]	85[211]	85[211]	85[211]	85[211]	—	—
				DC250	—	—	—	—	—	—	—	—
	S630-NE	250～630 (250,300, 350,400, 500,600,630)	3	AC690	20[43.0]	20[43.0]	20[43.0]	20[43.0]	20[43.0]	20[43.0]	—	—
				AC525	30[63]	30[63]	—	—	30[63]	30[63]	—	—
				AC450	50[121]	50[121]	50[121]	50[121]	50[121]	50[121]	—	—
				AC415	50[105]	50[105]	—	—	50[105]	50[105]	—	—
				AC240	85[211]	85[211]	85[211]	85[211]	85[211]	85[211]	—	—
	S630-NEH	250～630 (250,300, 350,400, 500,600,630)	3	AC690	20[43.0]	20[43.0]	20[43.0]	20[43.0]	20[43.0]	20[43.0]	—	—
				AC525	30[63]	30[63]	—	—	30[63]	30[63]	—	—
				AC450	50[121]	50[121]	50[121]	50[121]	50[121]	50[121]	—	—
				AC415	50[105]	50[105]	—	—	50[105]	50[105]	—	—
				AC240	85[211]	85[211]	85[211]	85[211]	85[211]	85[211]	—	—
	H630-NE	250～630 (250,300, 350,400, 500,600,630)	3	AC690	25[53.8]	20[43.0]	25[53.8]	20[43.0]	25[53.8]	20[43.0]	—	—
				AC525	45[94.5]	34[71.4]	—	—	45[94.5]	34[71.4]	—	—
				AC450	125[295]	94[225]	125[295]	94[225]	125[295]	94[225]	—	—
				AC415	125[275]	94[206.8]	—	—	125[275]	94[206.8]	—	—
				AC240	150[350]	150[350]	150[350]	150[350]	150[350]	150[350]	—	—
	L630-NE	250～630 (250,300, 350,400, 500,600,630)	3	AC690	25[53.8]	20[43.0]	25[53.8]	20[43.0]	25[53.8]	20[43.0]	—	—
				AC525	45[94.5]	34[71.4]	—	—	45[94.5]	34[71.4]	—	—
				AC450	180[430]	135[315]	180[430]	135[315]	180[430]	135[315]	—	—
				AC415	200[440]	150[330]	—	—	200[440]	150[330]	—	—
				AC240	200[484]	150[350]	200[484]	150[350]	200[484]	150[350]	—	—

Molded Case Circuit Breakers

10 List of breakers for marine use and rated breaking capacities (approved by ship classification societies)

TemBreak2

Frame size	Type	Rated current(A)	Poles	Rated voltage (V)	Rated breaking capacities, kA (sym.) Values enclosed in square brackets "[ ]" represent the making current, kA.							
					N K		L R		A B S		G L	
					I_{cu}	I_{cs}	I_{cu}	I_{cs}	I_{cu}	I_{cs}	I_{cu}	I_{cs}
800	**S800-CF**	700,800	3	AC690	10[21.1]	10[21.1]	10[21.1]	10[21.1]	10[21.1]	10[21.1]	10[21.1]	10[21.1]
				AC525	—	—	15[30]	15[30]	15[30]	15[30]	15[30]	15[30]
				AC450	30[70.8]	30[70.8]	30[70.8]	30[70.8]	30[70.8]	30[70.8]	30[70.8]	30[70.8]
				AC415	—	—	36[75.6]	36[75.6]	36[75.6]	36[75.6]	36[75.6]	36[75.6]
				AC240	50[117]	50[117]	50[117]	50[117]	50[117]	50[117]	50[117]	50[117]
				DC250	—	—	—	—	—	—	—	—
	S800-NF	700,800	3	AC690	20[43.0]	20[43.0]	20[43.0]	20[43.0]	20[43.0]	20[43.0]	20[43.0]	20[43.0]
				AC525	—	—	30[63]	30[63]	30[63]	30[63]	30[63]	30[63]
				AC450	50[121]	50[121]	50[121]	50[121]	50[121]	50[121]	50[121]	50[121]
				AC415	—	—	50[105]	50[105]	50[105]	50[105]	50[105]	50[105]
				AC240	85[211]	85[211]	85[211]	85[211]	85[211]	85[211]	85[211]	85[211]
				DC250	—	—	—	—	—	—	—	—
	S800-NE	350～800 (350,400, 450,500, 600,700,800)	3	AC690	20[43.0]	20[43.0]	20[43.0]	20[43.0]	20[43.0]	20[43.0]	20[43.0]	20[43.0]
				AC525	—	—	30[63]	30[63]	30[63]	30[63]	30[63]	30[63]
				AC450	50[121]	50[121]	50[121]	50[121]	50[121]	50[121]	50[121]	50[121]
				AC415	—	—	50[105]	50[105]	50[105]	50[105]	50[105]	50[105]
				AC240	85[211]	85[211]	85[211]	85[211]	85[211]	85[211]	85[211]	85[211]
	S800-NEH	350～800 (350,400, 450,500, 600,700,800)	3	AC690	20[43.0]	20[43.0]	20[43.0]	20[43.0]	20[43.0]	20[43.0]	20[43.0]	20[43.0]
				AC525	—	—	30[63]	30[63]	30[63]	30[63]	30[63]	30[63]
				AC450	50[121]	50[121]	50[121]	50[121]	50[121]	50[121]	50[121]	50[121]
				AC415	—	—	50[105]	50[105]	50[105]	50[105]	50[105]	50[105]
				AC240	85[211]	85[211]	85[211]	85[211]	85[211]	85[211]	85[211]	85[211]
	H800-NE	350～800 (350,400, 450,500, 600,700,800)	3	AC690	25[53.8]	20[43.0]	25[53.8]	20[43.0]	25[53.8]	20[43.0]	25[53.8]	20[43.0]
				AC525	—	—	45[94.5]	34[71.4]	45[94.5]	34[71.4]	45[94.5]	34[71.4]
				AC450	125[295]	94[225]	125[295]	94[225]	125[295]	94[225]	125[295]	94[225]
				AC415	—	—	125[275]	94[206.8]	125[275]	94[206.8]	125[275]	94[206.8]
				AC240	150[350]	150[350]	150[350]	150[350]	150[350]	150[350]	150[350]	150[350]
	L800-NE	350～800 (350,400, 450,500, 600,700,800)	3	AC690	25[53.8]	20[43.0]	25[53.8]	20[43.0]	25[53.8]	20[43.0]	25[53.8]	20[43.0]
				AC525	—	—	45[94.5]	34[71.4]	45[94.5]	34[71.4]	45[94.5]	34[71.4]
				AC450	180[430]	135[315]	180[430]	135[315]	180[430]	135[315]	180[430]	135[315]
				AC415	—	—	200[440]	150[330]	200[440]	150[330]	200[440]	150[330]
				AC240	200[484]	150[350]	200[484]	150[350]	200[484]	150[350]	200[484]	150[350]
1250	**S1250-NE**	500～1250 (500,600,700,800, 1000,1200,1250)	3	AC690	25[53.8]	20[43.0]	25[53.8]	20[43.0]	25[53.8]	20[43.0]	25[53.8]	20[43.0]
				AC450	65[157]	50[121]	65[157]	50[121]	65[157]	50[121]	65[157]	50[121]
				AC240	100[233]	75[181]	100[233]	75[181]	100[233]	75[181]	100[233]	75[181]
	S1250-NEH	500～1250 (500,600,700,800, 1000,1200,1250)	3	AC690	25[53.8]	20[43.0]	25[53.8]	20[43.0]	25[53.8]	20[43.0]	25[53.8]	20[43.0]
				AC450	65[157]	50[121]	65[157]	50[121]	65[157]	50[121]	65[157]	50[121]
				AC240	100[233]	75[181]	100[233]	75[181]	100[233]	75[181]	100[233]	75[181]
	S1250-GE	500～1250 (500,600,700,800, 1000,1200,1250)	3	AC690	45[100]	34[75.6]	45[100]	34[75.6]	45[100]	34[75.6]	45[100]	34[75.6]
				AC450	85[203]	65[157]	85[203]	65[157]	85[203]	65[157]	85[203]	65[157]
				AC240	125[306]	94[227]	125[306]	94[227]	125[306]	94[227]	125[306]	94[227]

Notes: ① : at 450V AC. ② : at 240V AC. ③ : at 120V AC. ④ : at 660V AC. ⑤ : at 525V AC. ⑦ : at 220V AC.
⑧ : at 110V AC. ⑨ : at 225V AC. ⑩ : at 440V AC. ⑬ : at 500V AC. ⑭ : at 250V AC. ⑮ : at 125V AC.

10 List of breakers for marine use and rated breaking capacities (approved by ship classification societies)

TemBreak2

Frame size	Type	Rated current(A)	Poles	Rated voltage (V)	Rated breaking capacities, kA (sym.) Values enclosed in square brackets "[ ]" represent the making current, kA.							
					BV		CCS		KR		RINA	
					I_{cu}	I_{cs}	I_{cu}	I_{cs}	I_{cu}	I_{cs}	I_{cu}	I_{cs}
800	**S800-CF**	700,800	3	AC690	10[21.1]	10[21.1]	10[21.1]	10[21.1]	10[21.1]	10[21.1]	—	—
				AC525	15[30]	15[30]	—	—	15[30]	15[30]	—	—
				AC450	30[70.8]	30[70.8]	30[70.8]	30[70.8]	30[70.8]	30[70.8]	—	—
				AC415	36[75.6]	36[75.6]	—	—	36[75.6]	36[75.6]	—	—
				AC240	50[117]	50[117]	50[117]	50[117]	50[117]	50[117]	—	—
				DC250	—	—	—	—	—	—	—	—
	S800-NF	700,800	3	AC690	20[43.0]	20[43.0]	20[43.0]	20[43.0]	20[43.0]	20[43.0]	—	—
				AC525	30[63]	30[63]	—	—	30[63]	30[63]	—	—
				AC450	50[121]	50[121]	50[121]	50[121]	50[121]	50[121]	—	—
				AC415	50[105]	50[105]	—	—	50[105]	50[105]	—	—
				AC240	85[211]	85[211]	85[211]	85[211]	85[211]	85[211]	—	—
				DC250	—	—	—	—	—	—	—	—
	S800-NE	350～800 (350,400, 450,500, 600,700,800)	3	AC690	20[43.0]	20[43.0]	20[43.0]	20[43.0]	20[43.0]	20[43.0]	—	—
				AC525	30[63]	30[63]	—	—	30[63]	30[63]	—	—
				AC450	50[121]	50[121]	50[121]	50[121]	50[121]	50[121]	—	—
				AC415	50[105]	50[105]	—	—	50[105]	50[105]	—	—
				AC240	85[211]	85[211]	85[211]	85[211]	85[211]	85[211]	—	—
	S800-NEH	350～800 (350,400, 450,500, 600,700,800)	3	AC690	20[43.0]	20[43.0]	20[43.0]	20[43.0]	20[43.0]	20[43.0]	—	—
				AC525	30[63]	30[63]	—	—	30[63]	30[63]	—	—
				AC450	50[121]	50[121]	50[121]	50[121]	50[121]	50[121]	—	—
				AC415	50[105]	50[105]	—	—	50[105]	50[105]	—	—
				AC240	85[211]	85[211]	85[211]	85[211]	85[211]	85[211]	—	—
	H800-NE	350～800 (350,400, 450,500, 600,700,800)	3	AC690	25[53.8]	20[43.0]	25[53.8]	20[43.0]	25[53.8]	20[43.0]	—	—
				AC525	45[94.5]	34[71.4]	—	—	45[94.5]	34[71.4]	—	—
				AC450	125[295]	94[225]	125[295]	94[225]	125[295]	94[225]	—	—
				AC415	125[275]	94[206.8]	—	—	125[275]	94[206.8]	—	—
				AC240	150[350]	150[350]	150[350]	150[350]	150[350]	150[350]	—	—
	L800-NE	350～800 (350,400, 450,500, 600,700,800)	3	AC690	25[53.8]	20[43.0]	25[53.8]	20[43.0]	25[53.8]	20[43.0]	—	—
				AC525	45[94.5]	34[71.4]	—	—	45[94.5]	34[71.4]	—	—
				AC450	180[430]	135[315]	180[430]	135[315]	180[430]	135[315]	—	—
				AC415	200[440]	150[330]	—	—	200[440]	150[330]	—	—
				AC240	200[484]	150[350]	200[484]	150[350]	200[484]	150[350]	—	—
1250	**S1250-NE**	500～1250 (500,600,700,800, 1000,1200,1250)	3	AC690	—	—	—	—	—	—	—	—
				AC450	—	—	—	—	—	—	—	—
				AC240	—	—	—	—	—	—	—	—
	S1250-NEH	500～1250 (500,600,700,800, 1000,1200,1250)	3	AC690	—	—	—	—	—	—	—	—
				AC450	—	—	—	—	—	—	—	—
				AC240	—	—	—	—	—	—	—	—
	S1250-GE	500～1250 (500,600,700,800, 1000,1200,1250)	3	AC690	—	—	—	—	—	—	—	—
				AC450	—	—	—	—	—	—	—	—
				AC240	—	—	—	—	—	—	—	—

10 List of breakers for marine use and rated breaking capacities (approved by ship classification societies)

TemBreak

Frame size	Type	Rated current(A)	Poles	Rated voltage (V)	Rated breaking capacities, kA (sym.) Values enclosed in square brackets "[ ]" represent the making current, kA.							
					N K		L R		A B S		G L	
					O-CO	O-CO-CO	O-CO	O-CO-CO	O-CO	O-CO-CO	O-CO	O-CO-CO
50	**TB-5S**	10	2	AC250	2.5[4.1]	—	2.5[4.1]	—	—	—	2.5[3.57]⑦	—
				AC125	42[99.3]	—	43.5[101.6]	—	—	—	42[102]⑧	—
				DC125	5.0[5.0]	—	5.0[5.0]	—	—	—	5.0[5.0]⑯	—
		15,20,30, 40,50	2	AC250	5.0[8.0]	—	5.0[8.0]	—	—	—	5[7.98]⑦	—
				AC125	42[99.3]	—	43.5[101.6]	—	—	—	42[102]⑧	—
				DC125	5.0[5.0]	—	5.0[5.0]	—	—	—	5.0[5.0]⑯	—
	TB-5P	10	2	AC250	2.5[4.1]	—	2.5[4.1]	—	2.5[4.1]	—	2.5[3.57]⑦	—
				AC125	42[99.3]	—	43.5[101.6]	—	42[99.3]	—	42[102]⑧	—
				DC125	5.0[5.0]	—	5.0[5.0]	—	5.0[5.0]	—	5.0[5.0]⑯	—
		15,20,30, 40,50	2	AC250	5.0[8.0]	—	5.0[8.0]	—	5.0[8.0]	—	5[7.98]⑦	—
				AC125	42[99.3]	—	43.5[101.6]	—	42[99.3]	—	42[102]⑧	—
				DC125	5.0[5.0]	—	5.0[5.0]	—	5.0[5.0]	—	5.0[5.0]⑯	—
	TB-5D	10	2	AC250	2.5[4.1]	—	2.5[4.1]	—	2.5[4.1]	—	2.5[3.57]⑦	—
				AC125	42[99.3]	—	43.5[101.6]	—	42[99.3]	—	42[102]⑧	—
				DC125	5.0[5.0]	—	5.0[5.0]	—	5.0[5.0]	—	5.0[5.0]⑯	—
		15,20,30, 40,50	2	AC250	5.0[8.0]	—	5.0[8.0]	—	5.0[8.0]	—	5[7.98]⑦	—
				AC125	42[99.3]	—	43.5[101.6]	—	42[99.3]	—	42[102]⑧	—
				DC125	5.0[5.0]	—	5.0[5.0]	—	5.0[5.0]	—	5.0[5.0]⑯	—
1000	**TL-1000NE**	500～1000 (500,600, 700,800, 900,1000)	3	AC690	—	—	45[93.8]	34[71.6]	—	—	45[92]	34[71.4]
				AC500	—	—	75[163]	57[124]	—	—	75[165]	57[125.4]
				AC460	125[295]	—	125[295]①	65[153]①	125[295]	—	125[298]①	65[153]①
				AC240	—	—	150[345]	113[263]	—	—	150[347]	113[248.6]
1200	**TL-1200NE**	600～1200 (600,700, 800,1000, 1200)	3	AC690	—	—	45[93.8]	34[71.6]	—	—	45[92]	34[71.4]
				AC500	—	—	75[163]	57[124]	—	—	75[165]	57[125.4]
				AC460	125[295]	—	125[295]①	65[153]①	125[295]	—	125[298]①	65[153]①
				AC240	—	—	150[345]	113[263]	—	—	150[347]	113[248.6]
2000	**XS2000NE**	1000～2000 (1000,1200,1400, 1600,1800,2000)	3	AC500	85[195]	—	87.1[194.9]	—	85[195]	—	85[187]①	64[140.8]①

Notes: ① : at 450V AC. ② : at 240V AC. ③ : at 120V AC. ④ : at 660V AC. ⑤ : at 525V AC. ⑦ : at 220V AC.
⑧ : at 110V AC. ⑨ : at 225V AC. ⑩ : at 440V AC. ⑬ : at 500V AC. ⑭ : at 250V AC. ⑮ : at 125V AC. ⑯ : at 110V DC.

10 List of breakers for marine use and rated breaking capacities (approved by ship classification societies)

TemBreak

Frame size	Type	Rated current(A)	Poles	Rated voltage (V)	Rated breaking capacities, kA (sym.) Values enclosed in square brackets "[ ]" represent the making current, kA.							
					B V		C C S		K R		R I N A	
					O-CO	O-CO-CO	O-CO	O-CO-CO	O-CO	O-CO-CO	O-CO	O-CO-CO
50	**TB-5S**	10	2	AC250	—	—	—	—	2.5[4.1]	—	—	—
				AC125	—	—	—	—	42[99.3]	—	—	—
				DC125	—	—	—	—	5.0[5.0]	—	—	—
		15,20,30, 40,50	2	AC250	—	—	—	—	5.0[8.0]	—	—	—
				AC125	—	—	—	—	42[99.3]	—	—	—
				DC125	—	—	—	—	5.0[5.0]	—	—	—
	TB-5P	10	2	AC250	2.5[3.57]⑨	—	2.5[4.1]	—	2.5[4.1]	—	—	—
				AC125	42[102]⑧	—	42[99.3]	—	42[99.3]	—	—	—
				DC125	—	—	5.0[5.0]	—	5.0[5.0]	—	—	—
		15,20,30, 40,50	2	AC250	5[7.98]⑨	—	5.0[8.0]	—	5.0[8.0]	—	—	—
				AC125	42[102]⑧	—	42[99.3]	—	42[99.3]	—	—	—
				DC125	—	—	5.0[5.0]	—	5.0[5.0]	—	—	—
	TB-5D	10	2	AC250	2.5[3.57]⑨	—	—	—	2.5[4.1]	—	—	—
				AC125	42[102]⑧	—	—	—	42[99.3]	—	—	—
				DC125	—	—	—	—	5.0[5.0]	—	—	—
		15,20,30, 40,50	2	AC250	5[7.98]⑨	—	—	—	5.0[8.0]	—	—	—
				AC125	42[102]⑧	—	—	—	42[99.3]	—	—	—
				DC125	—	—	—	—	5.0[5.0]	—	—	—
1000	**TL-1000NE**	500～1000 (500,600, 700,800, 900,1000)	3	AC690	45[93.8]	34[71.6]	—	—	—	—	45[94.5]	34[71.4]
				AC500	—	—	—	—	—	—	—	—
				AC460	125[295]①	65[153]①	—	—	—	—	125[275]①	63[138.6]①
				AC240	—	—	—	—	—	—	—	—
1200	**TL-1200NE**	600～1200 (600,700, 800,1000, 1200)	3	AC690	45[93.8]	34[71.6]	—	—	—	—	45[94.5]	34[71.4]
				AC500	—	—	—	—	—	—	—	—
				AC460	125[295]①	65[153]①	—	—	—	—	125[275]①	63[138.6]①
				AC240	—	—	—	—	—	—	—	—
2000	**XS2000NE**	1000～2000 (1000,1200,1400, 1600,1800,2000)	3	AC500	—	—	—	—	85[195]	—	—	—

3 Selection

3 Selection

Molded Case Circuit Breakers

1 Selection of breakers for protection of motor branch circuits

This table assumes that the motor branch circuit is protected against overcurrent by an electromagnetic relay and against short-circuit current by a molded case circuit breaker.

For protection of 200/220 VAC 3-phase induction motors

Rated breaking capacity (kA) AC230V I_{cu} (sym)			25		35		50		85		100		150	
Output (kW)	Full-load current (A)	Max. starting current (A)	Type	Rated current (A)	Type	Rated current (A)	Type	Rated current (A)	Type	Rated current (A)	Type	Rated current (A)	Type	Rated current (A)
0.75	3.71	28.4	**E50-SF**	15			**S50-SF**	15	**S50-GF**	15			**H100-NF**	15
1.5	6.74	56	**E50-SF**	20			**S50-SF**	20	**S50-GF**	15			**H100-NF**	15
2.2	10.4	96	**E50-SF**	30			**S50-SF**	30	**S50-GF**	30			**H100-NF**	20
3.7	15.6	139	**E50-SF**	40			**S50-SF**	40	**S50-GF**	40			**H100-NF**	30
5.5	22.8	203	**E100-SF**	60※			**S125-SF**	60	**S50-GF**	40			**H100-NF**	50
7.5	30.2	264	**E100-SF**	100			**S125-SF**	75	**S100-GF**	60			**H100-NF**	60
11	44.9	380					**S125-SF**	100	**S100-GF**	100			**H100-NF**	100
15	60	540			**E250-SF**	125	**S125-SF**	125※	**S125-GF**	125⑯			**H125-NF**	125
18.5	72	668			**E250-SF**	150	**S225-NF**	150	**S250-SF**	150			**H225-NF**	150
22	81.9	744			**E250-SF**	175	**S225-NF**	175	**S250-SF**	175			**H225-NF**	175
30	112	1090			**E250-SF**	200	**S225-NF**	200	**S250-SF**	200			**H225-NF**	200
37	141	1500			**E250-SFH**	225※	**S225-NFH**	225	**S250-SFH**	225※	**S400-GF**	250	**H400-NE**	250
45	168	1780					**S400-CF**	300	**S400-NF**	300	**S400-GF**	300	**H400-NE**	300
55	211	1960					**S400-CF**	400	**S400-NF**	400	**S400-GF**	400	**H400-NE**	350
75	272	2080					**S630-CF**	630	**S400-NEH**	400	**S400-GEH**	400	**H630-NE**	500
90	332	2600					**S800-CF**	800	**S800-NF**	800	**S800-RF**	800	**H630-NE**	630
110	380	2980							**S800-NE**	700	**S800-RE**	700	**H800-NE**	700
132	450	3460							**S800-NE**	800⑰	**S800-RE**	800⑰	**H800-NE**	800⑰

For protection of 400/440 VAC 3-phase induction motors

Rated breaking capacity (kA) AC440V I_{cu} (sym)			10		15		25		30		30		45	
Output (kW)	Full-load current (A)	Max. starting current (A)	Type	Rated current (A)	Type	Rated current (A)	Type	Rated current (A)	Type	Rated current (A)	Type	Rated current (A)	Type	Rated current (A)
0.75	1.9	14.2	**E50-SF**	15			**S50-SF**	15						
1.5	3.4	28	**E50-SF**	15			**S50-SF**	15						
2.2	5.2	48	**E50-SF**	20			**S50-SF**	15						
3.7	7.8	70	**E50-SF**	20			**S50-SF**	20						
5.5	11.4	102	**E50-SF**	30			**S50-SF**	30						
7.5	15.1	132	**E50-SF**	40			**S50-SF**	40						
11	22.5	190	**E50-SF**	50			**S125-SF**	50						
15	30	270	**E100-SF**	100			**S125-SF**	75						
18.5	36	334	**E100-SF**	100※			**S125-SF**	100						
22	41	372					**S125-SF**	125						
30	56	545			**E250-SF**	125	**S125-SF**	125※			**S250-SF**	125	**S400-NF**	125
37	70.5	750			**E250-SF**	150					**S250-SF**	150	**S400-NF**	150
45	84	890			**E250-SF**	175					**S250-SF**	175	**S400-NF**	175
55	105	980			**E250-SF**	200					**S250-SF**	200	**S400-NF**	200
75	136	1040			**E250-SFH**	225			**S400-CF**	300	**S250-SFH**	225	**S400-NF**	300
90	166	1300							**S400-CF**	350			**S400-NF**	350
110	190	1490							**S400-CF**	400			**S400-NF**	400
132	225	1730							**S400-CF**	400⑰			**S400-NE**	400
160	273	2170							**S630-CF**	630				

Note 1:
Motor starting conditions
The inrush current is assumed to be as follows:

Motor output	Inrush current
0.75 to 7.5 kW	Full-load current x 1600% max.
11 to 45 kW	Full-load current x 1700% max.
55 to 160 kW	Full-load current x 1800% max.

Exceptions:
⑯: Full-load x 1600% max.
⑰: Full-load x 1700% max.
When the inrush current exceeds the above values, the breaker may trip.

The starting time is assumed to be 6 seconds max. at the max. starting current.
Exceptions:
※: 5 seconds max. at the max. starting current
When the max. starting current flows through the breaker for a period of time exceeding the above max. starting time, the breaker may trip.

Note 2:
The full-load current and the max. starting current are determined with reference to those of highly efficient 3-phase induction motors (4 poles) from individual manufacturers. Please consult us if the full-load current or the max. starting current of your motor is different significantly from the values shown in the table.

Note 3:
- In regard to electronic breakers, it is assumed that the protection characteristic setting dial is set so that the long time delay tripping time is the longest.
- In regard to breakers with the instantaneous trip current being adjustable, it is assumed that the instantaneous trip current is set to the max. value.
- Protective coordination with the motor is analyzed for on the basis of 40℃ cold start characteristics of the breaker.

200		Rated breaking capacity (kA) AC230V Icu (sym)		
Type	Rated current (A)	Output (kW)	Full-load current (A)	Max. starting current (A)
		0.75	3.71	28.4
		1.5	6.74	56
		2.2	10.4	96
		3.7	15.6	139
		5.5	22.8	203
		7.5	30.2	264
		11	44.9	380
		15	60	540
		18.5	72	668
		22	81.9	744
		30	112	1090
L400-NE	250	37	141	1500
L400-NE	300	45	168	1780
L400-NE	350	55	211	1960
L630-NE	500	75	272	2080
L630-NE	630	90	332	2600
L800-NE	700	110	380	2980
L800-NE	800⑰	132	450	3460

50		65		80		120		125		180		Rated breaking capacity (kA) AC440V I_{cu} (sym)		
Type	Rated current (A)	Type	Rated current (A)	Type	Rated current (A)	Type	Rated current (A)	Type	Rated current (A)	Type	Rated current (A)	Output (kW)	Full-load current (A)	Max. starting current (A)
S50-GF	15					**H100-NF**	15			**L100-NF**	15	0.75	1.9	14.2
S50-GF	15					**H100-NF**	15			**L100-NF**	15	1.5	3.4	28
S50-GF	15					**H100-NF**	15			**L100-NF**	15	2.2	5.2	48
S50-GF	15					**H100-NF**	15			**L100-NF**	15	3.7	7.8	70
S50-GF	30					**H100-NF**	30			**L100-NF**	30	5.5	11.4	102
S50-GF	40					**H100-NF**	30			**L100-NF**	30	7.5	15.1	132
S50-GFH	40					**H100-NF**	50			**L100-NF**	50	11	22.5	190
S50-GFH	50					**H100-NF**	60			**L100-NF**	60	15	30	270
S100-GFH	60					**H100-NF**	75			**L100-NF**	75	18.5	36	334
S100-GFH	75					**H100-NF**	100			**L100-NF**	100	22	41	372
S100-GFH	100					**H100-NF**	100			**L100-NF**	100	30	56	545
S225-GF	125					**H225-NF**	125			**L225-NF**	125	37	70.5	750
S225-GF	150					**H225-NF**	150			**L225-NF**	150	45	84	890
S225-GFH	175					**H225-NF**	175⑰			**L225-NF**	175⑰	55	105	980
S225-GFH	225			**S400-PF**	300	**H225-NF**	225⑰			**L225-NF**	225⑰	75	136	1040
		S400-GF	350	**S400-PF**	350	**H400-NE**	300			**L400-NE**	300	90	166	1300
		S400-GF	400	**S400-PF**	400	**H400-NE**	350			**L400-NE**	350	110	190	1490
		S400-GE	400	**S400-PF**	400⑰	**H400-NE**	400			**L400-NE**	400	132	225	1730
S630-NF	630	**S630-RF**	630					**H630-NE**	500	**L630-NE**	500	160	273	2170

2 Combination of breakers for cascade breaking

The following table shows possible combinations of backup and backed-up breakers (conforming to Appendix A, IEC 60947-2) as well as the cascade breaking capacity (kA sym.) of each combination.

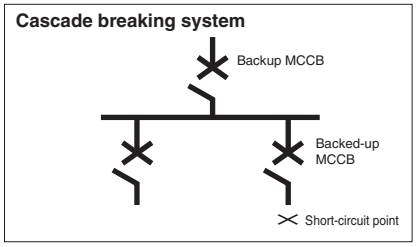

Breaker combination table for cascade breaking for 450V AC circuit (approved by NK, LR, AB)

Backup breaker / Rated breaking capacity / Backed-up breaker	sym.(kA)	E250-SF	S100-NF S125-NF S100-NFL S100-NFH	S125-SF	S225-NF S250-NF S225-NFL S225-NFH	S250-SF	S400-CF	S630-CF	S800-CF	S400-NF S400-NE S400-NEH	S50-GF S100-GF S125-GF S50-GFL S50-GFH S100-GFL S100-GFH	S225-GF S250-GF S225-GFL S225-GFH
		15	25	25	25	30	30	30	30	45	50	50
E50-SF	10	15 [32.6]	22 [51.9]	22 [51.9]	15 [32.6]	15 [32.6]	—	—	—	—	22 [51.9]	15 [32.6]
E100-SF	10	15 [32.6]	22 [51.9]	22 [51.9]	15 [32.6]	15 [32.6]	—	—	—	—	22 [51.9]	15 [32.6]
E250-SF	15	—	—	—	25 [56.2]	25 [56.2]	30 [70.8]	30 [70.8]	30 [70.8]	30 [70.8]	—	30 [70.8]
S50-SF S125-SF	25	—	—	—	—	—	30 [70.8]	30 [70.8]	30 [70.8]	30 [70.8]	42 [96.7]	42 [96.7]
S100-NF S125-NF S100-NFL S100-NFH S100-NM	25	—	—	—	—	—	30 [70.8]	30 [70.8]	30 [70.8]	30 [70.8]	42 [96.7]	42 [96.7]
S225-NF S250-NF S225-NFL S225-NFH S225-NM	25	—	—	—	—	—	30 [70.8]	30 [70.8]	30 [70.8]	42 [96.7]	—	42 [96.7]
S250-SF	30	—	—	—	—	—	30 [70.8]	30 [70.8]	30 [70.8]	42 [96.7]	—	42 [96.7]
S400-CF	30	—	—	—	—	—	—	—	—	45 [109]	—	—
S630-CF	30	—	—	—	—	—	—	—	—	—	—	—
S800-CF	30	—	—	—	—	—	—	—	—	—	—	—
S400-NF S400-NE S400-NEH	45	—	—	—	—	—	—	—	—	—	—	—
S50-GF S100-GF S125-GF S50-GFL S50-GFH S100-GFL S100-GFH	50	—	—	—	—	—	—	—	—	—	—	—
S225-GF S250-GF S225-GFL S225-GFH	50	—	—	—	—	—	—	—	—	—	—	—
S630-NF S630-NE S630-NEH	50	—	—	—	—	—	—	—	—	—	—	—
S800-NF S800-NE S800-NEH	50	—	—	—	—	—	—	—	—	—	—	—
S400-GF S400-GE S400-GEH	65	—	—	—	—	—	—	—	—	—	—	—
S400-PF S400-PE	80	—	—	—	—	—	—	—	—	—	—	—
H100-NF H125-NF	120	—	—	—	—	—	—	—	—	—	—	—
H225-NF	120	—	—	—	—	—	—	—	—	—	—	—
H400-NE	120	—	—	—	—	—	—	—	—	—	—	—

Notes: ① Values enclosed in square brackets "[ ]" represent the making current.

Breaker combination table for cascade breaking for 240V AC circuit (approved by NK, LR, AB)

Backup breaker / Rated breaking capacity / Backed-up breaker		E50-SF	E100-SF	S125-SF	S100-NF S125-NF S100-NFL S100-NFH	S225-NF S250-NF S225-NFL S225-NFH
	sym.(kA)	25	25	50	50	65
TB-5S	5②	25 [58.3]	25 [58.3]	25 [55.6]	25 [55.6]	—
TB-5D	5②	25 [58.3]	25 [58.3]	25 [55.6]	25 [55.6]	—
TB-5P	5②	25 [58.3]	25 [58.3]	25 [55.6]	25 [55.6]	—
E50-SF	25	—	—	50 [115]	50 [115]	50 [115]
E100-SF	25	—	—	50 [115]	50 [115]	50 [115]

Notes:
① Values enclosed in square brackets "[ ]" represent the making current.
② If the rated current is 10A, the rated breaking capacity is 2.5 kA.

S630-NF S630-NE S630-NEH	S800-NF S800-NE S800-NEH	S400-GF S400-GE S400-GEH	S400-PF S400-PE	H100-NF H125-NF	H225-NF	H400-NE	H630-NE	H800-NE	L100-NF L125-NF	L225-NF	L400-NE	L630-NE	L800-NE
50	50	65	80	120	120	120	125	125	180	180	180	180	180
—	—	—	—	22 [51.9]	—	—	—	—	180 [430]	—	—	—	—
—	—	—	—	22 [51.9]	—	—	—	—	180 [430]	—	—	—	—
30 [70.8]	30 [70.8]	30 [70.8]	30 [70.8]	—	50 [121]	50 [121]	30 [65.2]	30 [65.2]	—	70 [165]	70 [165]	30 [70.8]	30 [70.8]
30 [70.8]	30 [70.8]	30 [70.8]	30 [70.8]	50 [121]	50 [121]	50 [121]	30 [70.8]	30 [70.8]	180 [430]	70 [165]	70 [165]	30 [70.8]	30 [70.8]
30 [70.8]	30 [70.8]	30 [70.8]	30 [70.8]	50 [121]	50 [121]	50 [121]	30 [65.2]	30 [65.2]	180 [430]	70 [165]	70 [165]	30 [70.8]	30 [70.8]
42 [96.7]	42 [96.7]	42 [96.7]	42 [96.7]	—	70 [165]	70 [165]	70 [165]	70 [165]	—	130 [311]	130 [311]	85 [203]	85 [203]
42 [96.7]	42 [96.7]	42 [96.7]	42 [96.7]	—	70 [165]	70 [165]	70 [165]	70 [165]	—	130 [311]	130 [311]	85 [203]	85 [203]
50 [117]	50 [117]	50 [121]	50 [121]	—	—	100 [230]	70 [165]	70 [165]	—	—	130 [311]	100 [230]	100 [230]
50 [117]	50 [117]	—	—	—	—	—	100 [230]	100 [230]	—	—	—	130 [311]	130 [311]
—	50 [117]	—	—	—	—	—	—	100 [230]	—	—	—	—	130 [311]
—	—	—	—	—	—	100 [230]	100 [230]	100 [230]	—	—	130 [311]	130 [311]	130 [311]
—	—	—	—	70 [165]	70 [165]	70 [165]	—	—	180 [430]	85 [203]	85 [203]	—	—
—	—	—	—	—	70 [165]	70 [165]	—	—	—	130 [311]	130 [311]	85 [203]	85 [203]
—	—	—	—	—	—	—	100 [230]	100 [230]	—	—	—	130 [311]	130 [311]
—	—	—	—	—	—	—	—	100 [230]	—	—	—	—	130 [311]
—	—	—	—	—	—	100 [230]	100 [230]	100 [230]	—	—	130 [311]	130 [311]	130 [311]
—	—	—	—	—	—	100 [230]	100 [230]	100 [230]	—	—	130 [311]	130 [311]	130 [311]
—	—	—	—	—	—	—	—	—	180 [430]	—	—	—	—
—	—	—	—	—	—	—	—	—	—	130 [311]	—	—	—
—	—	—	—	—	—	—	—	—	—	—	180 [396]	180 [396]	180 [396]

3 Selection of breakers for selectivity coordination

The following table shows possible combinations of main circuit breakers and branch circuit breakers capable of selectivity coordination with the main circuit breakers as well as the breaking capacity (kA sym.) of each combination at the points where the branch circuit breaker is installed.

Selectivity coordination

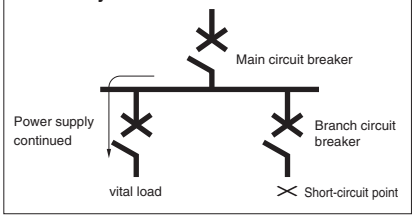

Breaker combination table for selectivity coordination for 450V AC circuit

Main circuit breaker / Rated breaking capacity sym.(kA) / Branch circuit breaker		S400-NE	S400-NEH	S400-GE	S400-GEH	H400-NE	L400-NE	S630-NE	S630-NEH	H630-NE	S800-NE	S800-NEH	H800-NE	TL-1200NE	S1250-NEH	S1600-NEH	※XS2000NE
		45	45	65	65	120	180	50	50	125	50	50	125	125	65	85	85
E50-SF E100-SF	10	5	6	5	6	5	5	10	10	10	10	10	10	10	10	10	10
E250-SF	15	5	6	5	6	5	5	15	15	15	15	15	15	15	15	15	15
S50-SF S100-NF S100-NFH S100-NFL S125-NF S125-SF	25	5	6	5	6	5	5	22	25	25	22	25	25	25	25	25	25
S225-NF S225-NFH S225-NFL S250-NF	25	5	6	5	6	5	5	25	25	25	25	25	25	25	25	25	25
S250-SF	30	5	6	5	6	5	5	25	30	30	25	30	30	30	30	30	30
S400-CF	30	—	—	—	—	—	—	—	25	—	25	25	25	30	30	30	30
S630-CF	30	—	—	—	—	—	—	—	—	—	—	—	—	30	30	30	30
S800-CF	30	—	—	—	—	—	—	—	—	—	—	—	—	—	—	20	30
S50-GF S50-GFH S50-GFL	50	5	6	5	6	5	5	42	45	50	42	45	50	50	50	50	50
S100-GF S100-GFH S100-GFL S125-GF	50	5	6	5	6	5	5	42	45	50	42	45	50	50	50	50	50
S225-GF S225-GFH S225-GFL S250-GF	50	5	6	5	6	5	5	25	50	50	50	50	50	50	50	50	50
S400-PF	80	—	—	—	—	—	—	—	—	—	25	25	25	50	—	—	50
S400-NE S400-NEH S400-NF	45	—	—	—	—	—	—	—	25	—	25	25	25	45	45	45	45
S400-GE S400-GEH S400-GF	65	—	—	—	—	—	—	—	25	—	25	25	25	50	50	50	50
S400-PE	80	—	—	—	—	—	—	—	—	—	25	25	25	50	—	—	50
S630-NE S630-NEH S630-NF	50	—	—	—	—	—	—	—	—	—	—	—	—	30	30	30	35
S800-NE S800-NEH S800-NF	50	—	—	—	—	—	—	—	—	—	—	—	—	—	—	20	35
H100-NF H125-NF	120	—	—	—	—	—	—	—	—	30	—	—	50	120	—	—	85
H225-NF	120	—	—	—	—	—	—	—	—	15	—	—	15	25	—	—	75
H400-NE	120	—	—	—	—	—	—	—	—	—	—	—	—	25	—	—	35
L100-NF L125-NF	180	—	—	—	—	—	—	—	—	60	—	—	125	125	—	—	85
L225-NF	180	—	—	—	—	—	—	—	—	—	—	—	20	35	—	—	85
L400-NE	180	—	—	—	—	—	—	—	—	—	—	—	—	25	—	—	85
H630-NE	125	—	—	—	—	—	—	—	—	—	—	—	—	15	—	—	35
L630-NE	180	—	—	—	—	—	—	—	—	—	—	—	—	15	—	—	35
H800-NE	125	—	—	—	—	—	—	—	—	—	—	—	—	—	—	—	35
L800-NE	180	—	—	—	—	—	—	—	—	—	—	—	—	—	—	—	35

Note: The table assumes that:
The trip pickup current of the main circuit breakers is set to the maximum;
The main circuit breakers are provided with the long time delay, short time delay and instantaneous trip functions;
The main circuit breakers marked with ※ are high instantaneous trip breakers.

4 Special Breakers

1 Instantaneous trip only breakers

These are standard breakers without the thermal overload trip. They have the instantaneous tripping characteristic, normally used when short circuit protection only is required. Other ratings and specifications and outline dimensions of these breakers are the same as those of standard breakers of the same types.

Category	Type	For AC/DC	Rated current, A	Code number	Instantaneous trip current, A
Fixed instantaneous trip ①	E50-SF	AC or DC [If the DC version is required, please state so when ordering. The AC version is provided unless otherwise stated when ordering.]	15I	I22	225±75
			20I	I30	300±100
			30I	I45	450±150
			40I	I60	600±200
			50I	I75	750±250
	S50-GF		15I	I18	180±36
			20I	I24	240±48
			30I	I36	360±72
			40I	I48	480±96
			50I	I60	600±120
	E100-SF		100I	I97	975±225
				I130	1300±300
	S100-NF S100-GF H100-NF L100-NF		15I	I18	180±36
			20I	I24	240±48
			30I	I36	360±72
			40I	I48	480±96
			50I	I60	600±120
			100I	I72	720±144
				I90	900±180
				I120	1200±240
	S125-NF S125-GF		125I	I125	1250±250
	S125-SF	③	125I	I60	600±120
				I100	1000±200
				I160	1600±320
	S225-NF S225-GF H225-NF L225-NF	AC or DC [If the DC version is required, please state so when ordering. The AC version is provided unless otherwise stated when ordering.]	225I	I162	1625±325
				I195	1950±390
				I227	2275±455
				I260	2600±520
				I292	2925±585
	E250-SF S250-SF		250I	I162	1625±325
				I195	1950±390
				I227	2275±455
				I260	2600±520
				I292	2925±585

Category	Type	For AC/DC	Rated current, A	Code number \ Dial position	12	11	10	9	8	7	6	
Adjustable instantaneous trip ②	S400-CF S400-NF S400-GF S400-PF	AC or DC [If the DC version is required, please state so when ordering. The AC version is provided unless otherwise stated when ordering.]	400I	V125	1500	1375	1250	1125	1000	875	750	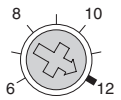 Selector dial
				V150	1800	1650	1500	1350	1200	1050	900	
				V175	2100	1925	1750	1575	1400	1225	1050	
				V200	2400	2200	2000	1800	1600	1400	1200	
				V225	2700	2475	2250	2025	1800	1575	1350	
				V250	3000	2750	2500	2250	2000	1750	1500	
				V300	3600	3300	3000	2700	2400	2100	1800	
				V350	4200	3850	3500	3150	2800	2450	2100	
				V400	4800	4400	4000	3600	3200	2800	2400	

Category	Type	For AC/DC	Rated current, A	Code number \ Dial position	10	9	8	7	6	5	
Adjustable instantaneous trip ②	S630-CF S630-NF S630-RF S630-PF	AC or DC [If the DC version is required, please state so when ordering. The AC version is provided unless otherwise stated when ordering.]	630I	V500	5000	4500	4000	3500	3000	2500	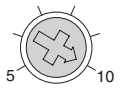 Selector dial
				V600	6000	5400	4800	4200	3600	3000	
				V630	6300	5670	5040	4410	3780	3150	
	S800-CF S800-NF S800-RF S800-PF		800I	V700	7000	6300	5600	4900	4200	3500	
				V800	8000	7200	6400	5600	4800	4000	

● The instantaneous trip current values shown in the table above are standard settings. Contact us if you require other settings.

Nameplate installed on the magnetic breakers only

Notes:

① Setting tolerance: ±20% (Please specify the code number).

② For AC:
The selector dial is factory set to position "12" unless the instantaneous trip current is specified. Setting tolerance: ±20% (Please specify the code number).

For DC:
The instantaneous trip current cannot be adjusted by the customer. The instantaneous trip current is factory set to the value specified by the customer.
Setting tolerance: ±20% (State the version (DC), code number and instantaneous trip current you require).

③ Common for AC use and DC use. In case of DC use the instantaneous trip current will be about 1.4 times that of the figures in the table. Setting tolerance ±20%.

1. High Instantaneous Trip

High instantaneous trip breakers are the breakers having a high instantaneous trip pickup current. Use these breakers in order to achieve selective coordination or to provide protection on the primary side of transformer.

Category	Type (Reference type ③)	Rated current, A		Instantaneous trip pickup current, A
Thermal -Magnetic type ①	**S50-GFH（S50-GF）**	15		300
		20		400
		30		600
		40		800
		50		1000
	S100-NFH（S100-NF） **S100-GFH（S100-GF）**	15		300
		20		400
		30		600
		40		800
		50		1000
		60		1200
		75		1500
		100		1800
	S225-NFH（S225-NF） **S225-GFH（S225-GF）**	125		2250
		150		2700
		175		3150
		200		3600
		225		4050
Electronic type ②	**S400-NEH（S400-NE）** **S400-GEH（S400-GE）**	CT rated current (I_{CT}), A	Rated current (I_R), A	6300
		400	175	
			200	
			225	
			250	
			300	
			350	
			400	
	S630-NEH（S630-NE）	CT rated current (I_{CT}), A	Rated current (I_R), A	10000
		630	250	
			300	
			350	
			400	
			500	
			600	
			630	
	S800-NEH（S800-NE）	CT rated current (I_{CT}), A	Rated current (I_R), A	10000
		800	350	
			400	
			450	
			500	
			600	
			700	
			800	
	S1250-NEH（S1250-NE）	CT rated current (I_{CT}), A	Rated current (I_R), A	15000
		1250	500	
			600	
			700	
			800	
			1000	
			1200	
			1250	
	XS2000NE④	CT rated current (I_{CT}), A	Rated current (I_R), A	35000
		2000	1000	
			1200	
			1400	
			1600	
			1800	
			2000	

Notes:
① Setting tolerance: ±10%. ② Setting tolerance: ±20%. ③ Ratings and specifications, except for the instantaneous trip pickup current, and outline dimensions of the High-Inst breakers are the same as those of the reference breakers enclosed in parentheses.
④ An optional trip indicator cannot be added.

Nameplate of High-Inst breakers

2. Low Instantaneous Trip

Low instantaneous trip breakers are the breakers having a low instantaneous trip pickup current. Use these breakers in order to achieve selective coordination with a high-voltage fuse located on the primary side of the breakers.

Category	Type (Reference type ②)	Rated current, A	Instantaneous trip pickup current, A
Thermal -Magnetic ①	**S50-GFL（S50-GF）**	15	90
		20	120
		30	180
		40	240
		50	300
	S100-NFL（S100-NF） **S100-GFL（S100-GF）**	15	90
		20	120
		30	180
		40	240
		50	300
		60	360
		75	450
		100	600
	S225-NFL（S225-NF） **S225-GFL（S225-GF）**	125	750
		150	900
		175	1050
		200	1200
		225	1350

Notes:
① Setting tolerance: ±10%.
② Ratings and specifications, except for the instantaneous trip pickup current, and outline dimensions of the Low-Inst breakers are the same as those of the reference breakers enclosed in parentheses.

Nameplate of Low-Inst breakers

5 Mounting and Connection

List of Connecting Types

Connecting types (Abbreviation)	Front-connected (FC)			Rear-connected (RC)	
	For compression terminals/flat bars	With extension bars	With cable clamps	Flat bar studs	
				Stud can be turned 45° or 90°	Stud can be tured 90°
Outer view / Breaker					
S50-SF,S125-SF,S125-SN	◉	○	—	○ ✻	—
S50-GF,S100-NF,S100-GF,S100-NN S125-NF,S125-GF,S125-NN S100-NM	◉	○	△	○	—
H100-NF,H125-NF,H225-NF,H225-GE	◉	○	△	○	—
L100-NF,L125-NF,L225-NF	◉	○	△	○	—
S225-NF,S225-GF S250-NF,S250-GF S225-NM	◉	○	△	○	—
E250-SF,S250-SF,S250-SN	◉	○	△	○	—
S400-CF,S400-NF,S400-NE S400-GF,S400-GE,S400-PF S400-PE,S400-NN	◉	○	△	○	—
H400-NE,L400-NE	◉	○	△	○	—
S630-CF,S630-NF,S630-NE,S630-RF S630-PF,S630-RE,S630-PE,S630-GN	—	◉	△	—	○
H630-NE,L630-NE	—	◉	△	—	○
S800-CF,S800-NF,S800-NE,S800-RF S800-PF,S800-RE,S800-PE,S800-NN	—	◉	—	—	○
H800-NE,L800-NE	—	◉	—	—	○
Remarks	• Connect compression terminals or flat bars directly to breaker terminals.	• Extension bars are attached to breaker terminals. Connect compression terminals or flat bars to the extension bars.	• Cable clamps are attached to breaker terminals. Connect wires directly to cable clamps. • Exclusive terminal covers for cable clamps are available.	• Flat bar studs will be factory installed in the horizontal position unless otherwise specified. • Flat bar studs in the vertical position are available on request. Please select a position code from those shown in the table below: ✻: The studs are horizontal direction only.	

Position code	Position of flat bar studs	
	Line side	Load side
RC-A	Vertical	Horizontal
RC-B	Horizontal	Vertical
RC-C	Vertical	Vertical
RC-D	Horizontal	Horizontal

See pages 5-16 and 5-17 for dimensions and tightening torques of terminal screws.

Notes:

①. Except 4-pole breakers.
②. May not be applied to 2 or 4-pole breakers of some types.
③. See page 5-8 for details.
④. See page 5-9 to 5-13 for details.
⑤. TemPlug 45B (PG4) is not applicable.

	Plug-in (PM)		Plug-in (PM)	Flush Plate (FP)	Draw-out type (DR)	*TemPlug* (PG)(PG4)②
	For switchboards ③		For distribution boards ①④	Flat bar studs		
	Standard	High-performance				
						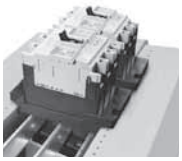
	○	—	○	○	—	—
	○	○	○	○	—	○
	○	○	—	○	—	▲
	○	○	—	○	—	—
	○	○	—	○	—	○
	○	—	—	○	—	○ ⑤
	○	○	—	○	▲	○
	○	○	—	○	—	—
	○	○	—	○	▲	○
	○	○	—	○	—	—
	○	○	—	○	▲	—
	○	○	—	○	—	—
	• To make connection, push the breaker into the mounting base already wired to the main and control circuits. The breaker can be fixed by the mounting screws. • High-performance models have a safety mechanism that prevents them from being mounted or removed as long as they are in the ON state. • Models meeting protection grade IP20 are available as options. IEC 60529 specifies that IP20-compliant devices be designed and constructed so that live parts of the devices cannot be touched by hand. When ordering the products, please specify as “IP20 applied products”.		• Plug-in type with front connection suitable for the small depth.	• Install the mounting frame directly to a panel. • Use the flat bar studs in the same manner as for rear-connected breakers. • The plate is painted in Munsell 5Y 7/1.	• To make connection, push the breaker into the draw-out cradle already wired to the main and control circuits. The draw-out cradle has two positions “Connected” and “Isolated”. • The breakers have a safety mechanism that prevents them from being mounted or removed as long as they are in the ON state. • Models meeting protection grade IP20 are available as options. IEC 60529 specifies that IP20-compliant devices be designed and constructed so that live parts of the devices cannot be touched by hand. When ordering the products, please specify as “IP20 applied products”.	• Simply plugging *TemPlug* onto the main busbars in a switchboard completes the connection of the breaker to a power distribution line. Use plug-in base mounting screws to secure the breaker. Direct coupling of the plug-in base to the main busbars reduces the lead time involved in completing a power distribution system. • If the frame size or rated current of the breakers is changed, all you have to do is to replace the *TemPlug*.

◉ : Standard. This configuration used unless otherwise specified.
○ : Optional standard. Specify when ordering.
▲ : Semi-standard.
△ : Custom-built. Contact us for details.
— : “no” or “not available”.

1 Type of connections and mountings

List of Connecting Types

Connecting types (Abbreviation) / Breaker	Front-connected (FC)		Rear-connected (RC)			
			Flat bar studs		Bolt studs	
	For compression terminals/flat bars	With extension bars	Stud can be turned 90°	Fixed ①		
TB-5S	◉	—	—	—	—	
TB-5P	◉ (Load side)	—	—	—	—	
TB-5D	—	—	—	—	—	
E50-SF, E100-SF, E50-CM	◉	—	—	—	○	
S1250-NE, S1250-GE, S1250-NN	—	◉	—	○ ②	—	
TL-1000NE, TL-1200NE	—	◉	—	○ ②	—	
S1600-NE, S1600-NN	—	○	—	◉ ③	—	
XS2000NE, XS2000NN	—	○	—	◉ ③	—	
Remarks	• Connect compression terminals directly to breaker terminals.	• Extension bars are attached to breaker terminals. Connect compression terminals or flat bars to the extension bars.				

See pages 5-18 and 5-19 for dimensions and tightening torques of terminal screws.

Notes:

①. Breakers are mounted on angles.

②. Flat bar studs will be factory installed in the horizontal position unless otherwise specified. If vertical installation is required, please state when ordering.

Position code	Position of flat bar studs	
	Line side	Load side
RC-A	Vertical	Horizontal
RC-B	Horizontal	Vertical
RC-C	Vertical	Vertical
RC-D	Horizontal	Horizontal

③. Vertical installation only

④. The breakers can be installed on the panel door using mounting frame supplied as standard.

⑤. The breakers can be installed on the mounting angle as well as Rear-connected breakers.

⑥. See page 5-8 for details.

	Plug-in (PM)		Draw-out type (DR)		Flush Plate (FP)
	For switchboards ⑥ Standard	For distribution boards	Two-position type	Three-position type	Flat bar studs
	—	—	—	—	—
	—	◉ (Line side)	—	—	—
	—	◉	—	—	—
	○	○	—	—	—
	○	—	▲	—	○ ② ④
	○	—	▲	—	○ ② ④
	—	—	—	—	○ ③ ④
	—	—	—	○	○ ③ ⑤
	• To make connection, push the breaker into the plug-in base cradle already wired to the main and control circuits. Use breaker mounting screws to secure the breaker. • Models meeting protection grade IP20 are available as options. IEC 60529/JIS C 0920 specify that IP20-compliant devices be designed and constructed so that live parts of the devices cannot be touched by hand.	• Plug-in type with front connection suitable for the small depth.	• To make connection, push the breaker into the draw-out cradle already wired to the main and control circuits. The draw-out cradle has two positions “Connected” and “Isolated”. • The breakers are fitted with a safety trip. If an attempt is made to remove the breakers while ON position it will automatically trip. • Models meeting protection grade IP20 are available as options. IEC 60529/JIS C 0920 specify that IP20-compliant devices be designed and constructed so that live parts of the devices cannot be touched by hand. When ordering the products, please specify as “IP20 applied products”. • The auxiliary circuit is connected or isolated automatically through the auxiliary circuit terminals of a plug-in breaker. (When the motor operator is mounted, the auxilary circuit is connected or isolated manually.)	• To make connection, push the breaker into the draw-out cradle already wired to the main and control circuits. The draw-out cradle has three positions “Connected”, “Test” and “Isolated”. • The breakers are fitted with a safety trip. If an attempt is made to remove the breakers while ON position it will automatically trip. • Safety shutters are available as option which automatically cover the live parts on the cradle side in the isolated position. • The auxiliary circuit is connected or isolated automatically by the disconnector. Connected on “CONN” and “TEST” position. Isolated on “ISOLATED” position.	• The plate is painted in Munsell 5Y 7/1.

◉ : Standard. This configuration used unless otherwise specified.
○ : Optional standard. Specify when ordering.
▲ : Semi-standard.
△ : Custom-built. Contact us for details.
— : “no” or “not available”.

Connecting parts

There are the following connecting/mounting hardware available as options:

1. Extension bars for front conection

Type	Number of poles	Applicable breakers		Min order qty	Constituent parts			Remarks
					Extension bar	Screw B	Screw C	
T2FB12L2SH	2	S50-SF	Straight extension bars	1/2 ①	2	2	2	
T2FB12L3SH	3				3	3	3	
T2FB12L2SB	2	S50-SF	Straight extension bars	1	4	4	4	
T2FB12L3SB	3				6	6	6	
T2FB12L2SH	2	S125-SF, S125-SN	Straight extension bars	1/2 ①	2	2	2	
T2FB12L3SH	3				3	3	3	
T2FB12L4SH	4				4	4	4	
T2FB12L2SB	2	S125-SF, S125-SN	Straight extension bars	1	4	4	4	
T2FB12L3SB	3				6	6	6	
T2FB12L4SB	4				8	8	8	
T2FB122H	2	S50-GF, S100-NF, S100-GF	Straight extension bars	1/2 ①	2	2	2	
T2FB123H	3	S100-NM, S100-NN			3	3	3	
T2FB124H	4	S125-NF, S125-GF, S125-NN			4	4	4	
T2FB122B	2	S50-GF, S100-NF, S100-GF	Straight extension bars	1	4	4	4	
T2FB123B	3	S100-NM, S100-NN			6	6	6	
T2FB124B	4	S125-NF, S125-GF, S125-NN			8	8	8	
T2FB252H	2	S225-NF, S225-GF, S250-NF, S250-GF	Spread extension bars	1/2 ①	2	2	2	
T2FB253H	3	H100-NF, L100-NF, H125-NF, L125-NF, S225-NF, S225-GF,			3	3	3	
T2FB254H	4	S225-GE, S225-NM, H225-NF, L225-NF, S250-NF, S250-GF	Straight extension bars		4	4	4	
T2FB252B	2	S225-NF, S225-GF, S250-NF, S250-GF	Spread extension bars	1	4	4	4	
T2FB253B	3	H100-NF, L100-NF, H125-NF, L125-NF, S225-NF, S225-GF,			6	6	6	
T2FB254B	4	S225-GE, S225-NM, H225-NF, L225-NF, S250-NF, S250-GF	Straight extension bars		8	8	8	
T2FB25L3WH	3	E250-SF, S250-SF, S250-SN	Spread extension bars	1/2 ①	3	3	3	
T2FB25L4WH	4				4	4	4	
T2FB25L3WB	3	E250-SF, S250-SF, S250-SN	Spread extension bars	1	6	6	6	
T2FB25L4WB	4				8	8	8	
T2FB25L2SH	2	E250-SF, S250-SF, S250-SN	Straight extension bars	1/2 ①	2	2	2	
T2FB25L3SH	3				3	3	3	
T2FB25L4SH	4				4	4	4	
T2FB25L2SB	2	E250-SF, S250-SF, S250-SN	Straight extension bars	1	4	4	4	
T2FB25L3SB	3				6	6	6	
T2FB25L4SB	4				8	8	8	
T2FB402H	2	S400-CF, S400-NF, S400-PF, S400-NN	Spread extension bars	1/2 ①	2	2	2	
T2FB403H	3	S400-NE, S400-GF, S400-GE, S400-PE			3	3	3	
T2FB404H	4	H400-NE, L400-NE			4	4	4	
T2FB402B	2	S400-CF, S400-NF, S400-PF, S400-NN	Spread extension bars	1	4	4	4	
T2FB403B	3	S400-NE, S400-GF, S400-GE, S400-PE			6	6	6	
T2FB404B	4	H400-NE, L400-NE			8	8	8	

● See page 5-16 for screws B and C.

Note ①: Two sets, one for the line side and one for the load side, are required per breaker.

2. Flat bar stud for rear connection

Type	Number of poles	Applicable breakers	Min order qty	Constituent parts			Remarks
				Stud bar	Screw D	Screw E	
T2RP05L2S	2	S50-SF,S125-SF（15-50A）	1	4	4	4	
T2RP05L3S	3			6	6	6	
T2RP12L2S	2	S125-SF,S125-SN（60-125A）	1	4	4	4	
T2RP12L3S	3			6	6	6	
T2RP12L4S	4			8	8	8	
T2RP122S	2	S50-GF,S100-NF,S100-GF	1 ①	4	4	4	
T2RP123S	3	S100-NM,S100-NN		6	6	6	
T2RP124S	4	S125-NF,S125-GF,S125-NN		8	8	8	
T2RP252S	2	S225-NF,S225-GF,S225-GE,S225-NM	1 ①	4	4	4	
T2RP253S	3	H225-NF,L225-NF		6	6	6	
T2RP254S	4	S250-NF,S250-GF		8	8	8	
T2RP25L2S	2	E250-SF,S250-SF,S250-SN	1 ①	4	4	4	
T2RP25L3S	3			6	6	6	
T2RP25L4S	4			8	8	8	
T2RP253L	3	H100-NF,L100-NF	1 ①	6	6	6	
T2RP254L	4	H125-NF,L125-NF H225-NF,L225-NF		8	8	8	
T2RP403S	3	S400-CF,S400-NF,S400-PF,S400-NN	1 ①	6	6	6	
T2RP404S	4	S400-NE,S400-GF,S400-GE,S400-PE		8	8	8	
T2RP403L	3	H400-NE,L400-NE	1 ①	6	6	6	
T2RP404L	4			8	8	8	

● See page 5-16 for screws D and E.

Note ①: The studs can be rotated to four angular positions: 0 (horizontal), 45, 90 (vertical) and 135 degrees.

3. Plug-in base for swichbords

Type		Number of poles	IP20	Applicable breakers	Min order qty	Constituent parts		Remarks
						Plug-in base	Nut J	
Standard	XDM1-2	2	Non	E50-SF,E100-SF	1	1	4	It is recommended to order plug-in base along with breakers. Separately available plug-in base are for the convenience of customers who want to make wiring of the mounts in advance.
	XDM1-3	3		E50-SF,E100-SF,E50-CM	1	1	6	
	T2PM12E3	3		S50-GF,S100-NF,S100-GF,S100-NN,S125-NF,S125-GF,S125-NN	1	1	6	
	T2PM12LT3	3		S50-SF,S125-SF,S125-SN	1	1	6	
	T2PM25E3	3		S225-NF,S225-GF,S225-GE S250-NF,S250-GF H100-NF,L100-NF,H125-NF,L125-NF,H225-NF,L225-NF	1	1	6	
	T2PM25LE3	3		E250-SF,S250-SF,S250-SN	1	1	6	
	T2PM40E3	3		S400-CF,S400-NF,S400-NE,S400-NN,S400-GF S400-GE,S400-PF,S400-PE,H400-NE,L400-NE	1	1	6	
	T2PM80E3	3		S630-CF,S630-NF,S630-NE,S630-RF,S630-PF,S630-RE,S630-PE,S630-GN S800-CF,S800-NF,S800-NE,S800-RF,S800-PF,S800-RE,S800-PE,S800-NN	1	1	6	
	T2PM80M3	3		H630-NE,L630-NE,H800-NE,L800-NE	1	1	6	
	T2PMX3E3	3		S1250-NE,S1250-GE,S1250-NN	1	1	6	
	T2PMX3E4	4		S1250-NE,S1250-GE	1	1	8	
	XDM8-3	3		TL-1000NE,TL-1200NE	1	1	6	
	XDM8-4	4		TL-1000NE,TL-1200NE	1	1	8	
	XDM1-2 ①	2	Compliant	E50-SF,E100-SF	1	1	4	
	XDM1-3 ①	3		E50-SF,E100-SF,E50-CM	1	1	6	
	T2PM12LC3	3		S50-SF,S125-SF,S125-SN	1	1	6	
	T2PM12C3	3		S50-GF,S100-NF,S100-GF,S100-NN,S125-NF,S125-GF,S125-NN	1	1	6	
	T2PM25C3	3		S225-NF,S225-GF,S225-GE S250-NF,S250-GF H100-NF,L100-NF,H125-NF,L125-NF,H225-NF,L225-NF	1	1	6	
	T2PM25LC3	3		E250-SF,S250-SF,S250-SN	1	1	6	
	T2PM40C3	3		S400-CF,S400-NF,S400-NE,S400-NN,S400-GF S400-GE,S400-PF,S400-PE,H400-NE,L400-NE	1	1	6	
	T2PM80C3	3		S630-CF,S630-NF,S630-NE,S630-RF,S630-PF,S630-RE,S630-PE,S630-GN S800-CF,S800-NF,S800-NE,S800-RF,S800-PF,S800-RE,S800-PE,S800-NN	1	1	6	
	T2PM80N3	3		H630-NE,L630-NE,H800-NE,L800-NE	1	1	6	
	T2PMX3C3	3		S1250-NE,S1250-GE,S1250-NN	1	1	6	
	T2PMX3C4	4		S1250-NE,S1250-GE	1	1	8	
	XDM8-3 ②	3		TL-1000NE,TL-1200NE	1	1	6	
	XDM8-4 ②	4		TL-1000NE,TL-1200NE	1	1	8	
High-performance	T2PM12B2	2	Non	S50-GF,S100-NF,S100-GF,S100-NN S125-NF,S125-GF,S125-NN	1	1	4	
	T2PM12B3	3				1	6	
	T2PM12B4	4				1	8	
	T2PM25B3	3		S225-NF,S225-GF,S225-GE S250-NF,S250-GF H100-NF,L100-NF,H125-NF,L125-NF H225-NF,L225-NF	1	1	6	
	T2PM25B4	4				1	8	
	T2PM40B3	3		S400-CF,S400-NF,S400-NE,S400-NN,S400-GF S400-GE,S400-PF,S400-PE,H400-NE,L400-NE	1	1	6	
	T2PM40B4	4					8	
	T2PM80B3	3		S630-CF,S630-NF,S630-NE,S630-RF,S630-PF,S630-RE,S630-PE,S630-GN S800-CF,S800-NF,S800-NE,S800-RF,S800-PF,S800-RE,S800-PE,S800-NN H630-NE,L630-NE,H800-NE,L800-NE	1	1	6	
	T2PM80B4	4				1	8	
	T2PM12P2	2	Compliant	S50-GF,S100-NF,S100-GF,S100-NN S125-NF,S125-GF,S125-NN	1	1	4	
	T2PM12P3	3				1	6	
	T2PM12P4	4				1	8	
	T2PM25P3	3		S225-NF,S225-GF,S225-GE S250-NF,S250-GF H100-NF,L100-NF,H125-NF,L125-NF H225-NF,L225-NF	1	1	6	
	T2PM25P4	4				1	8	
	T2PM40P3	3		S400-CF,S400-NF,S400-NE,S400-NN,S400-GF S400-GE,S400-PF,S400-PE,H400-NE,L400-NE	1	1	6	
	T2PM40P4	4				1	8	
	T2PM80P3	3		S630-CF,S630-NF,S630-NE,S630-RF,S630-PF,S630-RE,S630-PE,S630-GN S800-CF,S800-NF,S800-NE,S800-RF,S800-PF,S800-RE,S800-PE,S800-NN H630-NE,L630-NE,H800-NE,L800-NE	1	1	6	
	T2PM80P4	4				1	8	

● See page 5-17 or 5-19 for Nut J.

Notes: ① Please order 1 piece IP cover for 1 piece plug-in base. IP cover codes: IPC12 for 2 poles, IPC13 for 3 poles.
② When ordering the products, please specify as "IP20 applied products".

4. Flush Plate (with flat bar studs)

Type	Number of poles	Connection ①	Applicable breakers	Min order qty	Constituent parts						Remarks
					Flush plate ②		Flush-mounting frame	Stud bar	Frame mounting screw	Panel mounting screw	
					Molded	Iron					
T2FP12S2	2	①	S50-GF S100-NF,S100-GF,S100-NN S125-NF,S125-GF,S125-NN	1	—	1	1	—	2	4	
T2FP12S3	3								4		
T2FP12S4	4								4		
T2FP25S3	3	①	S225-NF,S225-GF S225-GE,S250-NF S250-GF	1	—	1	1	—	4	4	
T2FP25S4	4										
T2FP25L3	3	①	H100-NF,L100-NF,H125-NF,L125-NF H225-NF,L225-NF	1	—	1	1	—	4	4	
T2FP25L4	4										
T2FP40S3	3	①	S400-CF,S400-NF,S400-GF S400-GE,S400-NN	1	—	1	1	—	— ③	4	
T2FP40S4	4										
T2FP40L3	3	①	H400-NE,L400-NE	1	—	1	1	—	— ③	4	
T2FP40L4	4										

Notes:
①. Possible mounting positions include four angular ones: 0 (horizontal), 45, 90 (vertical) and 135 degrees.
②. The flash plate is painted in Munsell 5Y 7/1.
③. Use the breaker mounting screws (supplied with the breaker) to secure the breaker in the flush-mounting frame.
④. Stud bars are not supplied with the flush-mounting frame. See "2. Studs for rear connection" on page 5-6 to select and order suitable studs.

Plug-in type (PM)

1.For switchboards

Standard (PMC)

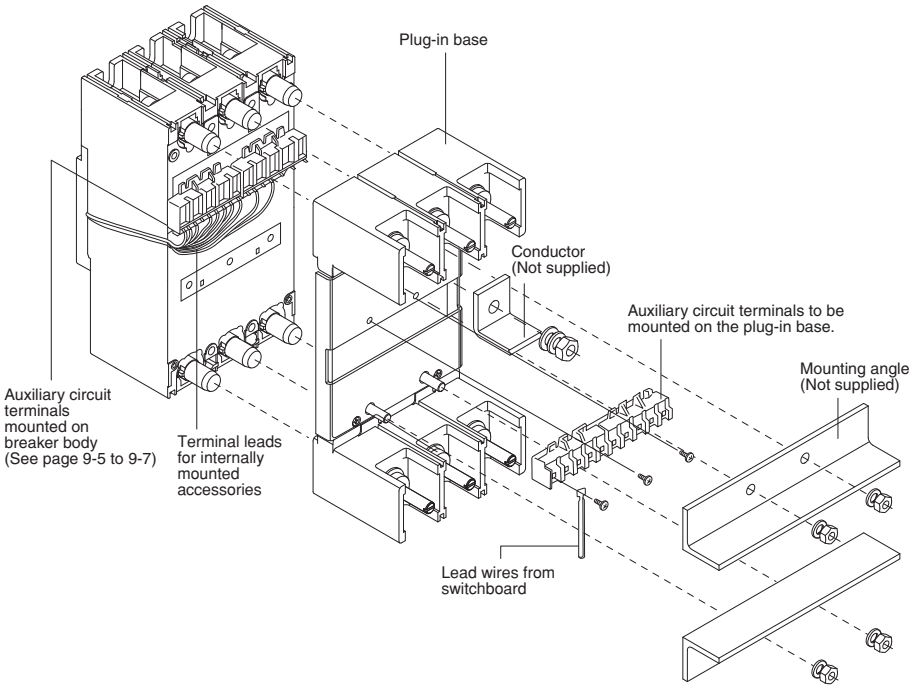

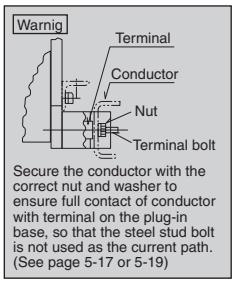

High-performance (PMB)

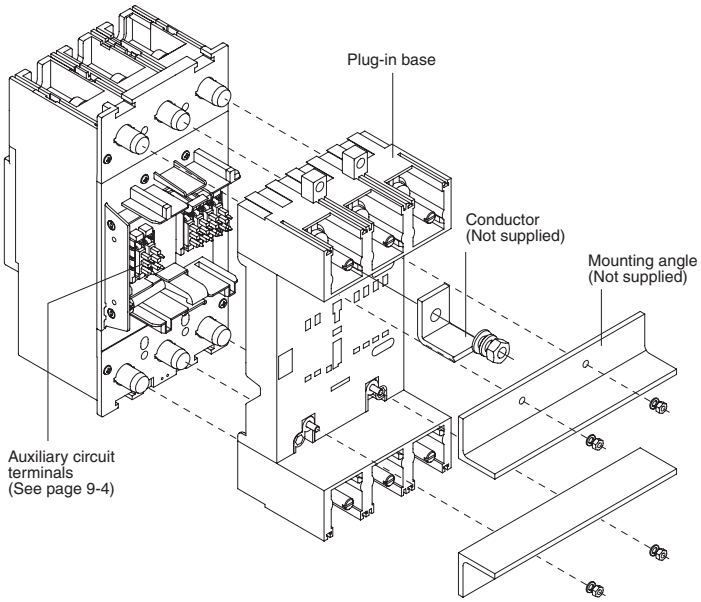

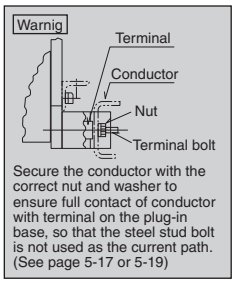

2. For distribution boards

Plug-in base

Frame size (A)	Breaker	No. of poles	Order codes for Plug-in bases	
50	**S50-SF**	2	For double	T2PM12LD2
			For single	T2PM12LS2
		3	For double	T2PM12LD3
			For single	T2PM12LS3
	S50-GF	3	For double	XDA2D-3
			For single	XDA2S-3
	E50-SF, E100-SF	2	For double	XDA1D-2
			For single	XDA1S-2
		3	For double	XDA1D-3
			For single	XDA1S-3
100	**S100-NF, S100-GF, S100-NN**	3	For double	XDA2D-3
			For single	XDA2S-3
125	**S125-SF**	2	For double	T2PM12LD2
			For single	T2PM12LS2
		3	For double	T2PM12LD3
			For single	T2PM12LS3
	S125-SN	3	For double	T2PM12LD3
			For single	T2PM12LS3

■ Components / Parts to be purchased

Breaker	Components / Parts to be purchased				Mounting/connecting screws			Remarks
		Name	Type	Qty	Size	Qty	Remarks	
E50-SF E50-CM E100-SF	For double	Plug-in base	XDA1D-2	2	M4×30	2	For breaker mounting	For 2-pole breaker
			XDA1D-3	2	M4×30	4	For breaker mounting	For 3-pole breaker
		Branching bar (thickness)	2RT-LD（t=2）	2	M5×12	2	For busbar connection	For 10 – 50A
					M4×8	4	For Mounting base installation	
			22S-LD（t=2）	1	M5×12	1	For busbar connection	
					M4×8	2	For Mounting base installation	
			2RT-LD10（t=3）	2	M5×12	2	For busbar connection	For 60 – 100A
					M4×8	4	For Mounting base installation	
			22S-LD10（t=3）	1	M5×12	1	For busbar connection	
					M4×8	2	For Mounting base installation	
		Connecting plate	Connecting plate 2 (for 2-pole breaker)	1	M4×35	4		
			Connecting plate 3PD (for 3-pole breaker)	1	M4×35	4		
		Insulator for arc	Arc guard 2PD (for 2-pole breaker)	1				
			Arc guard 3PD (for 3-pole breaker)	1				
		Branching bar barrier	Busbar barrier D	2				
	For single	Plug-in base	XDA1S-2	1	M4×30	2	For breaker mounting	For 2-pole breaker
			XDA1S-3	1	M4×30	4	For breaker mounting	For 3-pole breaker
		Branching bar (thickness)	1R-LD（t=2）	1	M5×12	3	For busbar connection	For 10 – 50A
			1S-LD（t=2）	1	M4×8	3	For Mounting base installation	
			1T-LD（t=2）	1				
			1R-LD10（t=3）	1	M5×12	3	For busbar connection	For 60 – 100A
			1S-LD10（t=3）	1	M4×8	3	For Mounting base installation	
			1T-LD10（t=3）	1				
S50-SF S125-SF S125-SN	For double	Plug-in base	T2PM12LD2	2	M4×30	2		For 2-pole breaker
			T2PM12LD3	2	M4×30	4		For 3-pole breaker
		Branching bar (thickness)	2RT-LDB（t=2）	2	M5×12	2	For busbar connection	For 15 – 50A
					M4×8	4	For Mounting base installation	
			22S-LDB（t=2）	1	M5×12	1	For busbar connection	
					M4×8	2	For Mounting base installation	
			2RT-LD10B（t=3）	2	M5×12	2	For busbar connection	For 60 – 125A
					M4×8	4	For Mounting base installation	
			22S-LD10B（t=3）	1	M5×12	1	For busbar connection	
					M4×8	2	For Mounting base installation	
		Connecting plate	Connecting plate 2 (for 2-pole breaker)	1	M4×35	4		
			Connecting plate 3PD (for 3-pole breaker)	1	M4×35	4		
		Insulator for arc	Arc guard 2PD (for 2-pole breaker)	1				
			Arc guard 3PD (for 3-pole breaker)	1				
		Branching bar barrier	Busbar barrier D	2				
	For single	Plug-in base	T2PM12LS2	1	M4×30	2	For breaker mounting	For 2-pole breaker
			T2PM12LS3	1	M4×30	4	For breaker mounting	For 3-pole breaker
		Branching bar (thickness)	1R-LDB（t=2）	1	M5×12	3	For busbar connection	For 15 – 50A
			1S-LDB（t=2）	1	M4×8	3	For Mounting base installation	
			1T-LDB（t=2）	1				
			1R-LD10B（t=3）	1	M5×12	3	For busbar connection	For 60 – 125A
			1S-LD10B（t=3）	1	M4×8	3	For Mounting base installation	
			1T-LD10B（t=3）	1				
S50-GF S100-NF S100-GF S100-NN S125-NF S125-GF S125-NN	For double	Plug-in base	XDA2D-3	2	M5×25	4	For breaker mounting	For 3-pole breaker
		Branching bar (thickness)	2RT-LE（t=2）	2	M5×12	2	For busbar connection	For 10 – 50A
					M4×8	4	For Mounting base installation	
			22S-LE（t=2）	1	M5×12	1	For busbar connection	
					M4×8	2	For Mounting base installation	
			2RT-LE10（t=3）	2	M5×12	2	For busbar connection	For 60 – 125A
					M4×8	4	For Mounting base installation	
			22S-LE10（t=3）	1	M5×12	1	For busbar connection	
					M4×8	2	For Mounting base installation	
		Connecting plate	Connecting plate 3P (for 3-pole breaker)	1	M4×35	4		
		Insulator for arc	Arc guard 3P (for 3-pole breaker)	1				
		Branching bar barrier	Busbar barrier E	2				
	For single	Plug-in base	XDA2S-3	1	M4×30	4	For breaker mounting	For 3-pole breaker
		Branching bar (thickness)	1R-LE（t=2）	1	M5×12	3	For busbar connection	For 10 – 50A
			1S-LE（t=2）	1	M4×8	3	For Mounting base installation	
			1T-LE（t=2）	1				
			1R-LE10（t=3）	1	M5×12	3	For busbar connection	For 60 – 125A
			1S-LE10（t=3）	1	M4×8	3	For Mounting base installation	
			1T-LE10（t=3）	1				

Notes:
1. The number required to form either single or double plug-in base.
2. Branch bars for 10 – 50A and 60 – 125A differ in thickness only. The conductor for 10 – 50A (2 mm thick) can be used for applications where the breaker rated current is 50A or less.

Outline dimensions

XDA1D-2, XDA1S-2, XDA1D-3, XDA1S-3

Applicable breaker types		
E50-SF	E50-CM	E100-SF

■ **XDA1D-2, XDA1D-3 (3 poles only for E50-CM)**

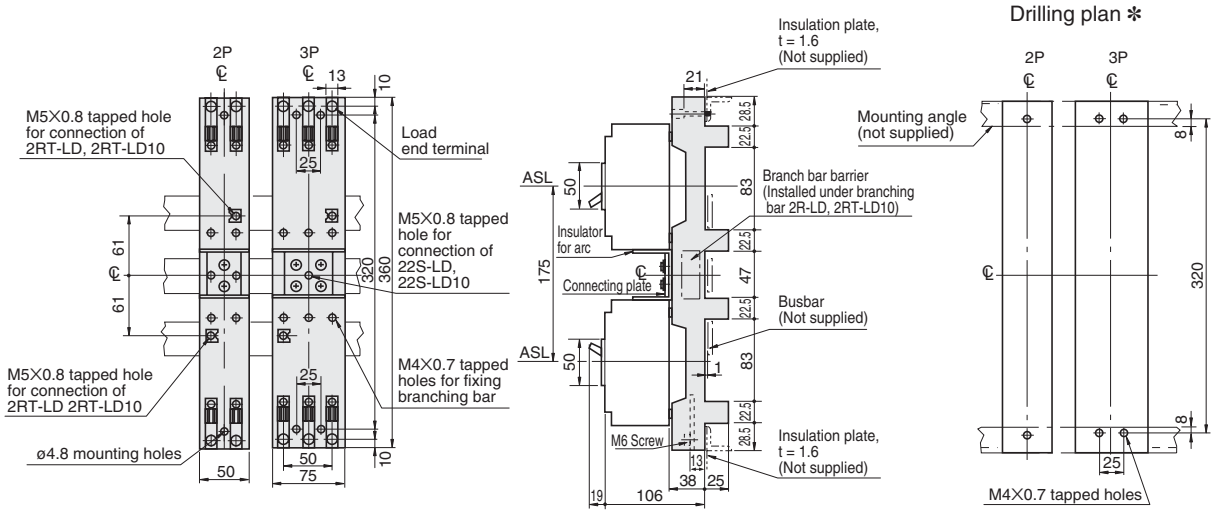

■ **XDA1S-2, XDA1S-3 (3 poles only for E50-CM)**

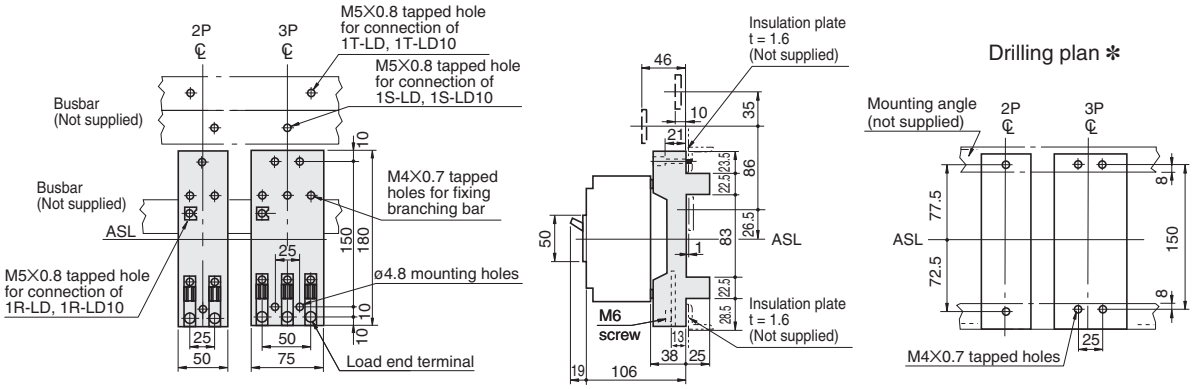

✻ Allow a clearance of 5 mm from the adjacent breaker if optional internally mounted accessories are installed.

■ **Components / Parts to be purchased**

◉**Branching bar**

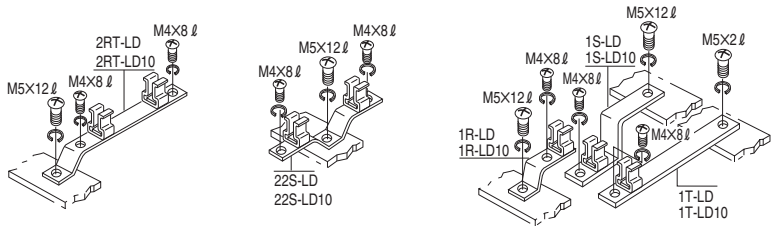

◉**Insulator for arc**

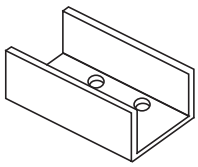

◉**Branching bar barrier**

◉**Connecting plate**

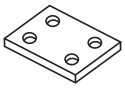

✻ Screws are not supplied.

Outline dimensions

T2PM12LD2, T2PM12LD3, T2PM12LS2, T2PM12LS3

Applicable breaker types		
S50-SF	S125-SF	S125-SN

■ **T2PM12LD2, T2PM12LD3**

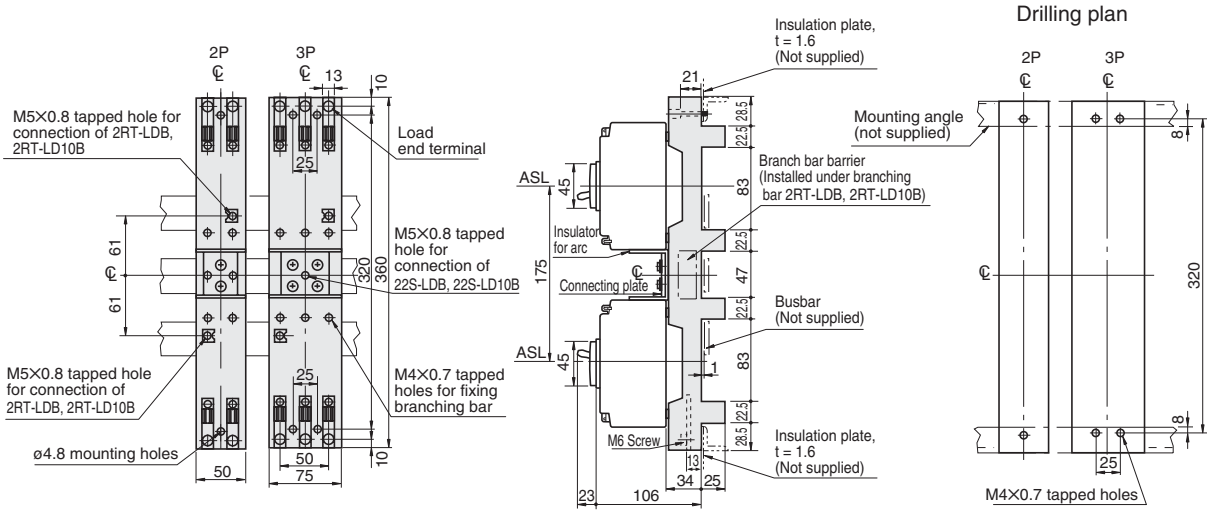

■ **T2PM12LS2, T2PM12LS3**

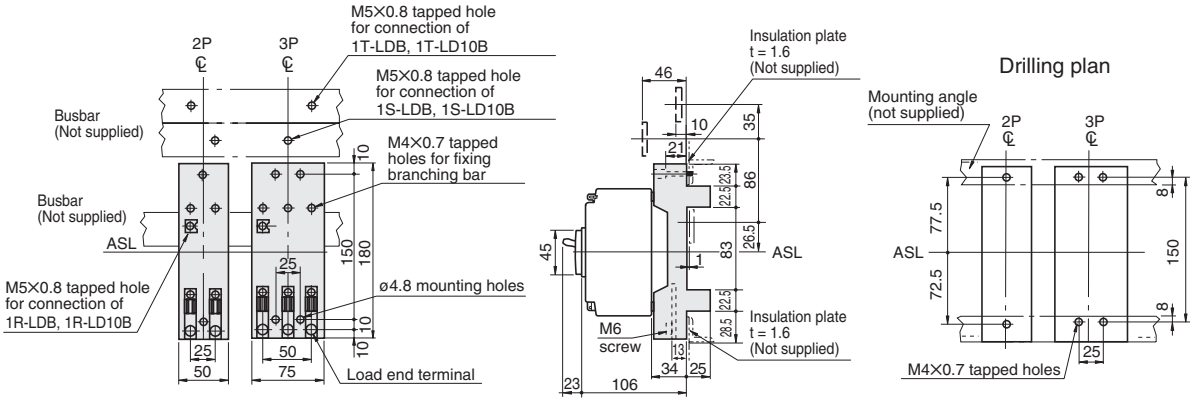

■ **Components / Parts to be purchased**

◉**Branching bar**

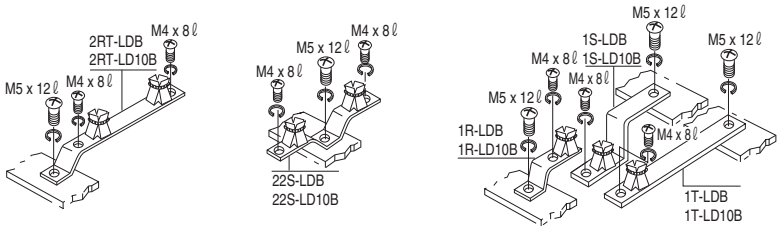

◉**Insulator for arc**

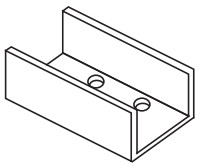

◉**Branching bar barrier**

◉**Connecting plate**

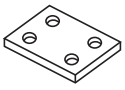

✻ Screws are not supplied.

Outline dimensions

XDA2D-3, XDA2S-3

Applicable breaker types						
S50-GF	S100-NF	S100-GF	S100-NN	S125-NF	S125-GF	S125-NN

■ **XDA2D-3**

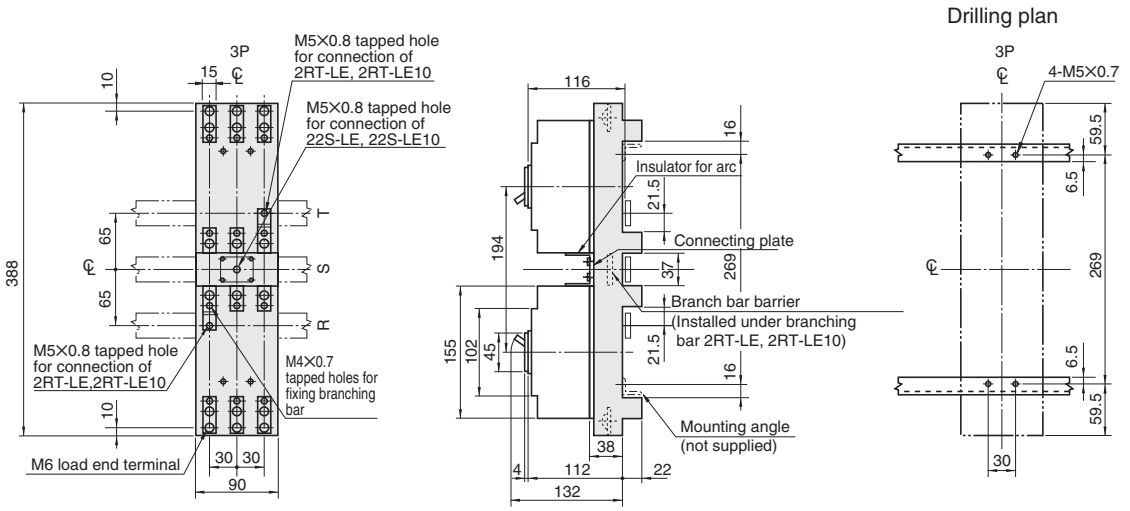

■ **XDA2S-3**

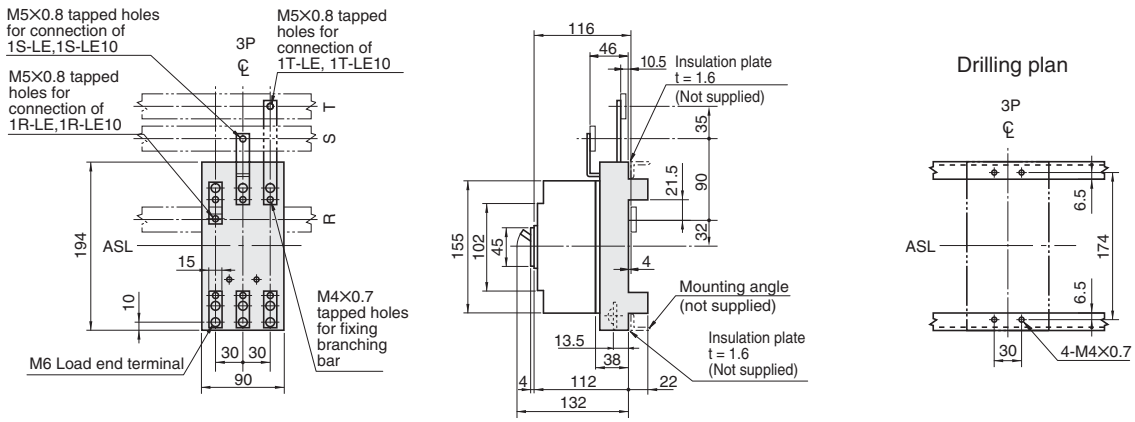

■ **Components / Parts to be purchased**

◉**Branching bar**

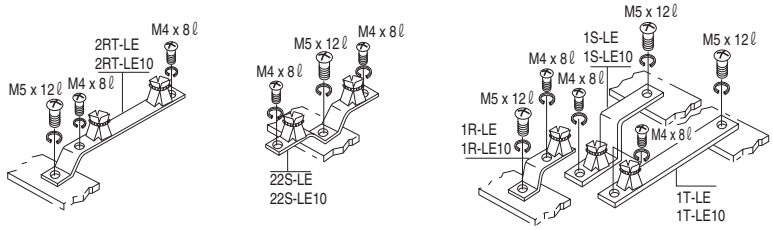

◉**Insulator for arc**

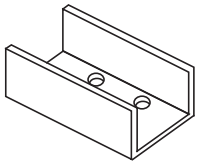

◉**Branching bar barrier**

◉**Connecting plate**

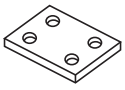

✻ Screws are not supplied.

Front connected type (without extension bar)

Frame size (A)	Breaker		Nominal wire size (mm²)									
			2	5.5	8	14	22	38	60	80	100	150
50	**E50-SF,S50-SF**		R2-5 (R2-6)	R5.5-5 (R5.5-6)	R8-5 (R8-6)	R14-5	NTMCB22-5S AMP33114					
	S50-GF		R2-8	R5.5-8	R8-8	R14-8	R22-8	AMP322870 JST38-S8 NTK-R38-8-1 NTM38-8S	60-S8 Note ③			
100	**S100-NF, S100-GF, S100-NM**											
	S100-NN								CB60-8			
	H100-NF, L100-NF											
125	**E100-SF, S125-SF, S125-SN, S125-NN**	(15-50A)	R2-5 (R2-6)	R5.5-5 (R5.5-6)	R8-5 (R8-6)	R14-5	NTMCB22-5S AMP33114					
		(60-125A)			R8-8	R14-8	R22-8	AMP322870 JST38-S8 NTM38-8S	60-S8 Note ③			
	H125-NF, L125-NF		R2-8	R5.5-8	R8-8	R14-8	R22-8	AMP322870 JST38-S8 NTK-R38-8-1 NTM38-8S	60-S8 Note ③			
									CB60-8			
225	**S225-NF, S225-GF, S225-GE, S225-NM** **H225-NF, L225-NF**							R38-8	R60-8	80-3BA Note ③	100-3BA Note ③	CB150-8
250	**S250-NF, S250-GF, E250-SF** **S250-SF, S250-SN**									CB80-8	CB100-8	
400	**S400-CF, S400-NF, S400-NE** **S400-GF, S400-GE, S400-NN** **S400-PF, S400-PE** **H400-NE, L400-NE**							R38-10 Note ②	R60-10 Note ②	80-4B Note ②	100-4B Note ②	150-4B Note ②
										CB80-10 Note ②	CB100-10 Note ②	CB150-10 Note ②

Front connected type (with extension bar)

Frame size (A)	Breaker		Nominal wire size (mm²)						
			38	60	80	100	150	200	325
225, 250	**S225-NF, S225-GF, S225-GE, S225-NM** **H225-NF, L225-NF** **S250-NF, S250-GF, E250-SF** **S250-SF, S250-SN**	3P	R38-10	R60-10	R80-10	R100-10	R150-10		
		4P					CB150-10		
400	**S400-CF, S400-NF, S400-NE** **S400-GF, S400-GE, S400-NN** **S400-PF, S400-PE** **H400-NE, L400-NE**		R38-12	R60-12	R80-12	R100-12	R150-12	R200-12	JST325-12
630	**S630-CF, S630-NF, S630-NE, S630-RF, S630-RE, S630-PF, S630-PE** **S630-GN** **H630-NE,L630-NE**			R60-12 RD60-12	R80-12 RD80-12	R100-12 RD100-12	R150-12 RD150-12	R200-12 RD200-12	JST325-12 SD325-12
800	**S800-CF, S800-NF, S800-NE, S800-RF, S800-RE, S800-PF, S800-PE** **S800-NN** **H800-NE, L800-NE**								
1250	**S1250-NE, S1250-GE, S1250-NN**				R80-12 RD80-12	R100-12 RD100-12	R150-12 RD150-12	R200-12 RD200-12	JST325-12 SD325-12
1000	**TL-1000NE**				R80-12 RD80-12	R100-12 RD100-12	R150-12 RD150-12	R200-12 RD200-12	JST325-12 SD325-12
1200	**TL-1200NE**				R80-12 RD80-12	R100-12 RD100-12	R150-12 RD150-12	R200-12 RD200-12	JST325-12 SD325-12

Notes:

①. Commercially made compression terminals can be used (refer to ▭ boxes)
- R/RD : JIS-compliant
- CB : JEM 1399-compliant
- AMP : Made by Tyco Electronics Japan G.K.
- JST : Made by Japan Solderless Terminal Manufacturing Co., Ltd.
- NTK : Made by Nippon Tanshi Co., Ltd.
- NTM : Made by Nichifu Terminal Industries Co., Ltd.

②. Only a single terminal can be connected.

③. Compression terminals in ▭ box cells are made by us at Terasaki. They are available from us or our authorized agents.

④. Compression terminals enclosed in parentheses are to be used as the lower terminal when two terminals are connected.

Connection (two terminals)

If a shortage of insulating occurs between the mounting plate and a terminal, use a recommended taping or insulator.

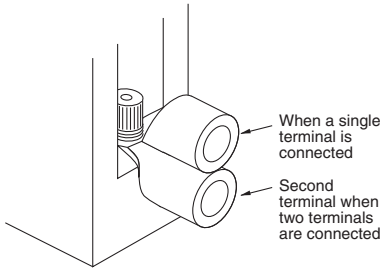

Terasaki made compression terminals are used (refer to box)

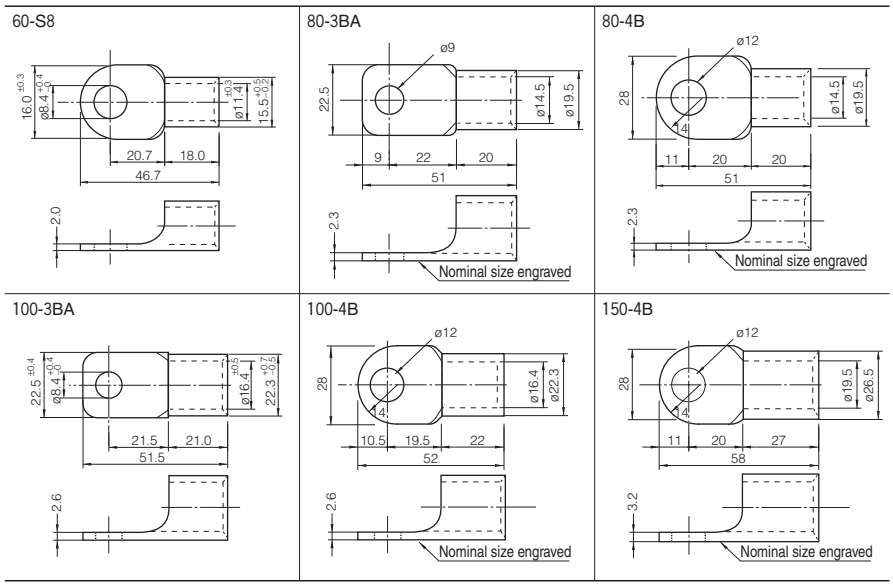

Connection (one electric cable)

If a shortage of insulating occurs, use a recommended taping or insulator.

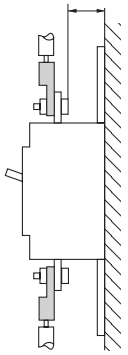

Make connection so that the screw heads face toward the mounting surface.

Connection (two electric cables)

If a shortage of insulating occurs, use a recommended typing or insulator.

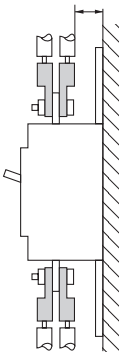

Make connection so that the screw heads face toward the mounting surface.

3 Terminal screw sizes and standard torques

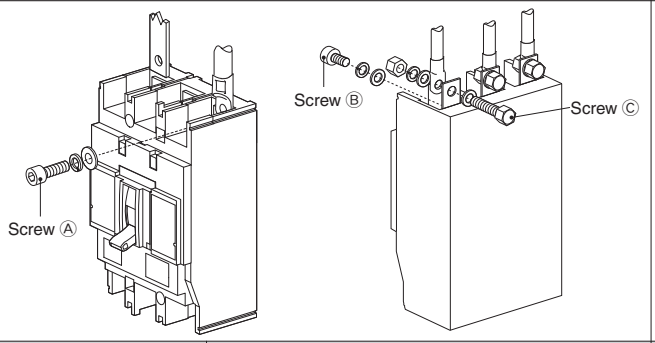

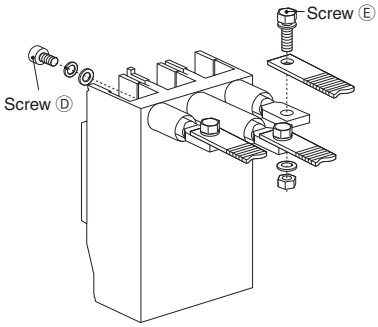

Connecting types / Type		Front connection (FC)						Rear connection (RC) (Flat bar stud)			
Frame size (A)	Breaker	Compression terminal		Extension bar							
		Screw size (A)	Torque (N·m)	Screw size (B)	Torque (N·m)	Screw size (C)	Torque (N·m)	Screw size (D)	Torque (N·m)	Screw size (E)	Torque (N·m)
50	**S50-SF**	Wire clamping M5×14	2.3～3.4	Wire clamping M5×14	2.3～3.4	Hex head M8×30	11.8～18.6	Pan head M5×14	2.3～2.8	Hex head M6×22	2.7～4.5
	S50-GF	Pan head M8×16	4.9～6.9	Pan head M8×16	4.9～6.9	Hex head M8×25	11.8～18.6	Hex socket head M6×20	7.8～11.8	Hex head M8×25	11.8～18.6
100	**S100-NF,S100-GF S100-NN**	Pan head M8×16	4.9～6.9	Pan head M8×16	4.9～6.9	Hex head M8×25	11.8～18.6	Hex socket head M6×20	7.8～11.8	Hex head M8×25	11.8～18.6
	S100-NM	Pan head M8×16	4.9～6.9	Pan head M8×16	4.9～6.9	Hex head M8×25	11.8～18.6	Hex socket head M6×20	7.8～11.8	Hex head M8×25	11.8～18.6
	H100-NF,L100-NF	Hex socket head M8×20	7.8～12.7	Hex socket head M8×20	7.8～12.7	Hex head M10×25	22.5～37.2	Hex socket head M6×20	7.8～11.8	Hex head M8×25	11.8～18.6
125	**S125-SF 15～50A**	Wire clamping M5×14	2.3～3.4	Wire clamping M5×14	2.3～3.4	Hex head M8×30	11.8～18.6	Pan head M5×14	2.3～2.8	Hex head M6×22	2.7～4.5
	S125-SF 60～125A	Pan head M8×14	4.9～6.9	Pan head M8×14	4.9～6.9	Hex head M8×30	11.8～18.6	Hex socket head M6×16	7.8～11.8	Hex head M8×23	11.8～18.6
	S125-SN	Pan head M8×14	4.9～6.9	Pan head M8×14	4.9～6.9	Hex head M8×30	11.8～18.6	Hex socket head M6×16	7.8～11.8	Hex head M8×23	11.8～18.6
	S125-NF,S125-GF S125-NN	Pan head M8×16	4.9～6.9	Pan head M8×16	4.9～6.9	Hex head M8×25	11.8～18.6	Hex socket head M6×20	7.8～11.8	Hex head M8×25	11.8～18.6
	H125-NF,L125-NF	Hex socket head M8×20	7.8～12.7	Hex socket head M8×20	7.8～12.7	Hex head M10×25	22.5～37.2	Hex socket head M6×20	7.8～11.8	Hex head M8×25	11.8～18.6
225	**S225-NF,S225-GF S225-GE H225-NF,L225-NF**	Hex socket head M8×20	7.8～12.7	Hex socket head M8×20	7.8～12.7	Hex head M10×25	22.5～37.2	Hex socket head M6×20	7.8～11.8	Hex head M8×25	11.8～18.6
	S225-NM	Hex socket head M8×20	7.8～12.7	Hex socket head M8×20	7.8～12.7	Hex head M10×25	22.5～37.2	Hex socket head M6×20	7.8～11.8	Hex head M8×25	11.8～18.6
250	**E250-SF,S250-SF S250-SN**	Hex socket head M8×20	7.8～12.7	Hex socket head M8×20	7.8～12.7	Hex head M10×25	22.5～37.2	Hex socket head M6×20	7.8～11.8	Hex head M8×25	11.8～18.6
	S250-NF,S250-GF	Hex socket head M8×20	7.8～12.7	Hex socket head M8×20	7.8～12.7	Hex head M10×25	22.5～37.2	Hex socket head M6×20	7.8～11.8	Hex head M8×25	11.8～18.6
400	**S400-CF,S400-NF S400-NES400-GF S400-GE,S400-PF S400-PE,S400-NN**	Hex socket head M10×25	13.7～22.5	Hex socket head M10×25	13.7～22.5	Hex head M12×35	40.2～65.7	Special hex socket head M10×20	18.6～29.4	Hex head M12×35	40.2～65.7
	H400-NE,L400-NE	Hex socket head M10×30	13.7～22.5	Hex socket head M10×30	13.7～22.5						
630	**S630-CF,S630-NF S630-NE,S630-RF S630-RE,S630-PF S630-PE,S630-GN**	—	—	Hex socket head M8×25×2	Extension bars are fitted as standard.	Hex head M12×40	40.2～65.7	Special hex socket head M10×27	18.6～29.4	Hex head M12×40	40.2～65.7
	H630-NE,L630-NE										
800	**S800-CF,S800-NF S800-NE,S800-RF S800-RE,S800-PF S800-PE,S800-NN**	—	—	Hex socket head M8×25×2	Extension bars are fitted as standard.	Hex head M12×40	40.2～65.7	Special hex socket head M10×27	18.6～29.4	Hex head M12×40	40.2～65.7
	H800-NE,L800-NE										

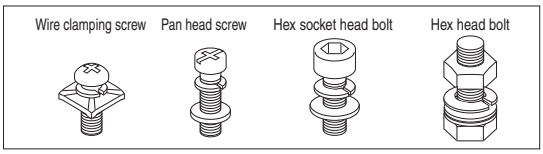

	Flush Plate (FP)				Plug-in (PM)		Draw-out (DR)	
	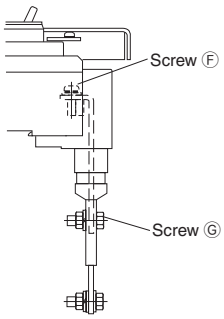				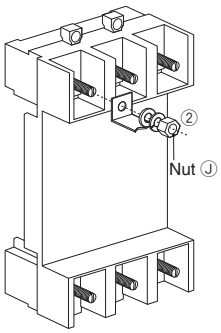		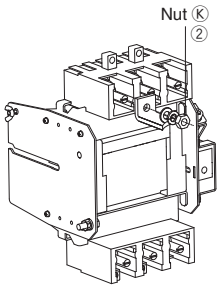	
	With flat bar stud							
	Screw size (F)	Torque (N·m)	Screw size (G)	Torque (N·m)	Nut size (J)	Torque (N·m)	Nut size (K)	Torque (N·m)
	Pan head M5×14	2.3～2.8	Hex head M6×22	2.7～4.5	Hex. nut M6	3.6～6.0	—	—
	Hex socket head M6×20	7.8～11.8	Hex head M8×25	11.8～18.6	Hex. nut M6	3.6～6.0	—	—
	Hex socket head M6×20	7.8～11.8	Hex head M8×25	11.8～18.6	Hex. nut M6	3.6～6.0	—	—
	Hex socket head M6×20	7.8～11.8	Hex head M8×25	11.8～18.6	—	—	—	—
	Hex socket head M6×20	7.8～11.8	Hex head M8×25	11.8～18.6	Hex. nut M8	8.8～14.7	—	—
	Pan head M5×14	2.3～2.8	Hex head M6×22	2.7～4.5	Hex. nut M6	3.6～6.0	—	—
	Hex socket head M6×16	7.8～11.8	Hex head M8×23	11.8～18.6	Hex. nut M6	3.6～6.0	—	—
	Hex socket head M6×16	7.8～11.8	Hex head M8×23	11.8～18.6	Hex. nut M6	3.6～6.0	—	—
	Hex socket head M6×20	7.8～11.8	Hex head M8×25	11.8～18.6	Hex. nut M6	3.6～6.0	—	—
	Hex socket head M6×20	7.8～11.8	Hex head M8×25	11.8～18.6	Hex. nut M8	8.8～14.7	—	—
	Hex socket head M6×20	7.8～11.8	Hex head M8×25	11.8～18.6	Hex. nut M8	8.8～14.7	—	—
	Hex socket head M6×20	7.8～11.8	Hex head M8×25	11.8～18.6	—	—	—	—
	Hex socket head M6×18	7.8～11.8	Hex head M8×25	11.8～18.6	Hex. nut M8	8.8～14.7	—	—
	Hex socket head M6×20	7.8～11.8	Hex head M8×25	11.8～18.6	Hex. nut M8	8.8～14.7	—	—
	Special hex socket head M10×40	18.6～29.4	Hex head M12×35	40.2～65.7	Hex. nut M10	18.6～29.4	Hex. nut M10	18.6～29.4
							—	—
	Special hex socket head M10×27	18.6～29.4	Hex head M12×40	40.2～65.7	Hex. nut M12	32.3～51.9	Note ①	
							—	—
	Special hex socket head M10×27	18.6～29.4	Hex head M12×40	40.2～65.7	Hex. nut M12	32.3～51.9	Noto ①	
							—	—

Notes:

①. Connecting method and standard torques are same as plug-in (PM).

②. Secure the conductor with the correct nut and washer to ensure full contact of conductor with terminal on the plug-in base, so that the steel terminal bolt is not used as the current path.

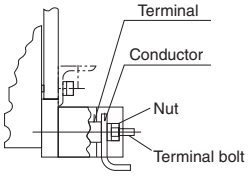

Molded Case Circuit Breakers

3 Terminal screw sizes and standard torques

Connecting types / Type		Front connection (FC)				Rear connection (RC) (Flat bar stud)					
		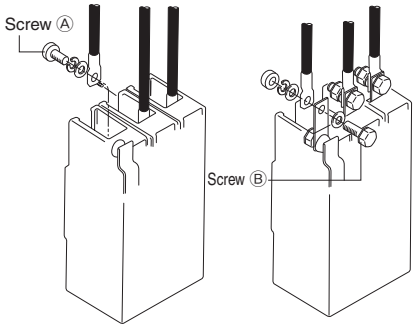				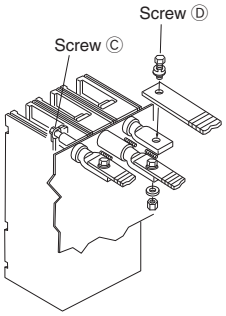				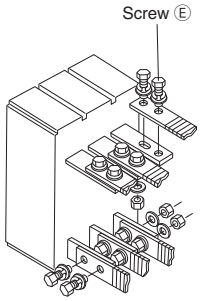	
Frame size (A)	Breaker	Compression terminal		Extension bar							
		Screw size (A)	Torque (N·m)	Screw size (B)	Torque (N·m)	Screw size (C)	Torque (N·m)	Screw size (D)	Torque (N·m)	Screw size (E)	Torque (N·m)
50	**TB-5S,TB-5P**	Pan head M5×12 Wire clamping screw	2.3～3.4	—	—	—	—	—	—	—	—
	TB-5D	—	—	—	—	—	—	—	—	—	—
	E50-SF	Pan head M5×12 Wire clamping screw	2.3～3.4	—	—	—	—	—	—	—	—
100	**E100-SF (10～50A)**	Pan head M5×12 Wire clamping screw	2.3～3.4	—	—	—	—	—	—	—	—
	E100-SF (60～100A)	Pan head M8×14	4.9～6.9	—	—	—	—	—	—	—	—
1000	**TL-1000NE**	—	—	Hex head M12×55	40.2～65.7	—	—	—	—	Hex head M12×47	40.2～65.7
1200	**TL-1200NE**	—	—	Hex head M12×55	40.2～65.7	—	—	—	—	Hex head M12×47	40.2～65.7
1250	**S1250-NE,S1250-GE S1250-NN**	—	—	Hex head M12×55	40.2～65.7	—	—	—	—	Hex head M12×47	40.2～65.7
1600 ②	**S1600-NE S1600-NN**	—	—	Hex head M12×60	40.2～65.7	—	—	—	—	Hex head M10×45	22.5～37.2
2000 ②	**XS2000NE XS2000NN**	—	—	Hex head M10×60	22.5～37.2	—	—	—	—	Hex head M10×60	22.5～37.2

Note ②: Terminal screws for 1600AF and over are not provided as standard.

	Rear connection (RC) (Bolt stud)				Plug-in (PM)		Draw-out (DR)	
	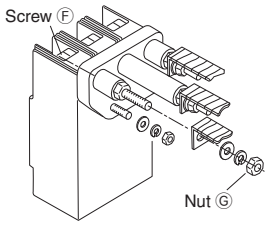				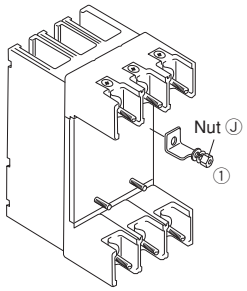		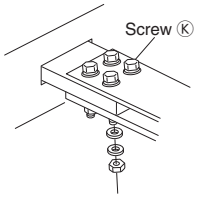	
	Screw size (F)	Torque (N·m)	Nut size (G)	Torque (N·m)	Nut size (J)	Torque (N·m)	Screw size (K)	Torque (N·m)
	—	—	—	—	—	—	—	—
	—	—	—	—	Pan head M5×8 (screw)①	2.2～3.5	—	—
	Pan head M4×12	1.1～1.7	Hex. nut M6	2.7～4.5	Hex. nut M6	3.6～6.0	—	—
	Pan head M4×14	1.1～1.7	Hex. nut M6	2.7～4.5	Hex. nut M6	3.6～6.0	—	—
	Hex head M6 nut	2.7～4.5	Hex. nut M8	6.9～10.8	Hex. nut M6	3.6～6.0	—	—
	—	—	—	—	Hex. nut M12×47 (screw)	40.2～65.7	—	—
	—	—	—	—	Hex. nut M12×47 (screw)	40.2～65.7	—	—
	—	—	—	—	Hex. nut M12×47 (screw)	40.2～65.7	—	—
	—	—	—	—	—	—	Hex head M10×45	22.5～37.2
	—	—	—	—	—	—	Hex head M10×60	22.5～37.2

Note:

①. Secure the conductor with the correct nut and washer to ensure full contact of conductor with terminal on the plug-in base, so that the steel terminal bolt is not used as the current path.

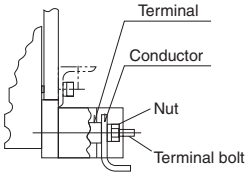

4 Insulation distance from the line side

The insulation distance between the breaker and earthed metal parts and insulators shown in the table on the next page must be maintained to prevent arcing faults occurring due to conductive ionised gas. In addition, completely cover exposed conductors, to their roots at the breaker or to below the height protected by interpole barriers, on the line side of the breaker using insulation tube or tape, in order to provide positive protection against short circuit or ground fault due to metal chipping, surge voltage, dust particles or salt. Be sure to install the interpole barriers supplied with the breaker.

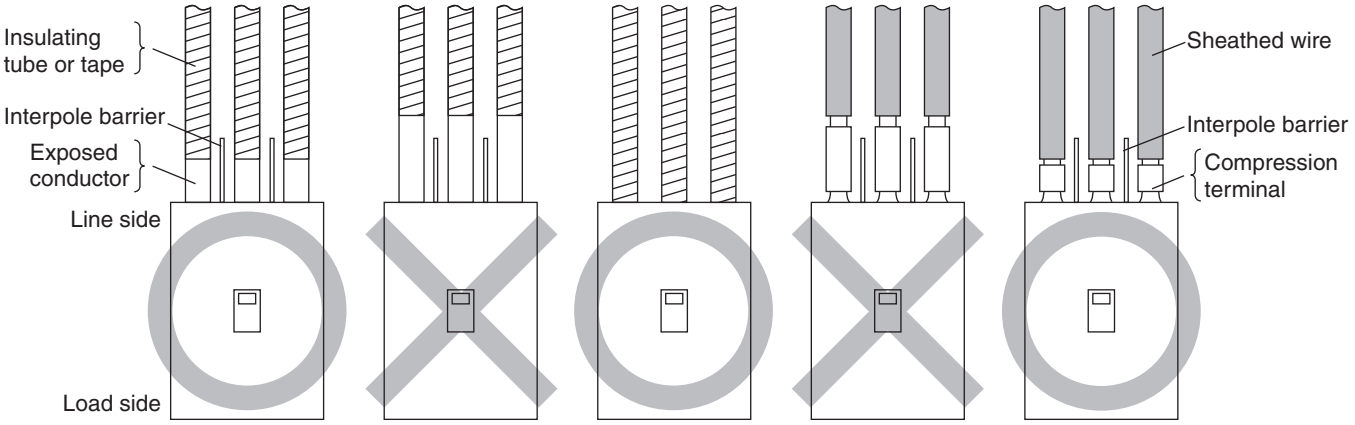

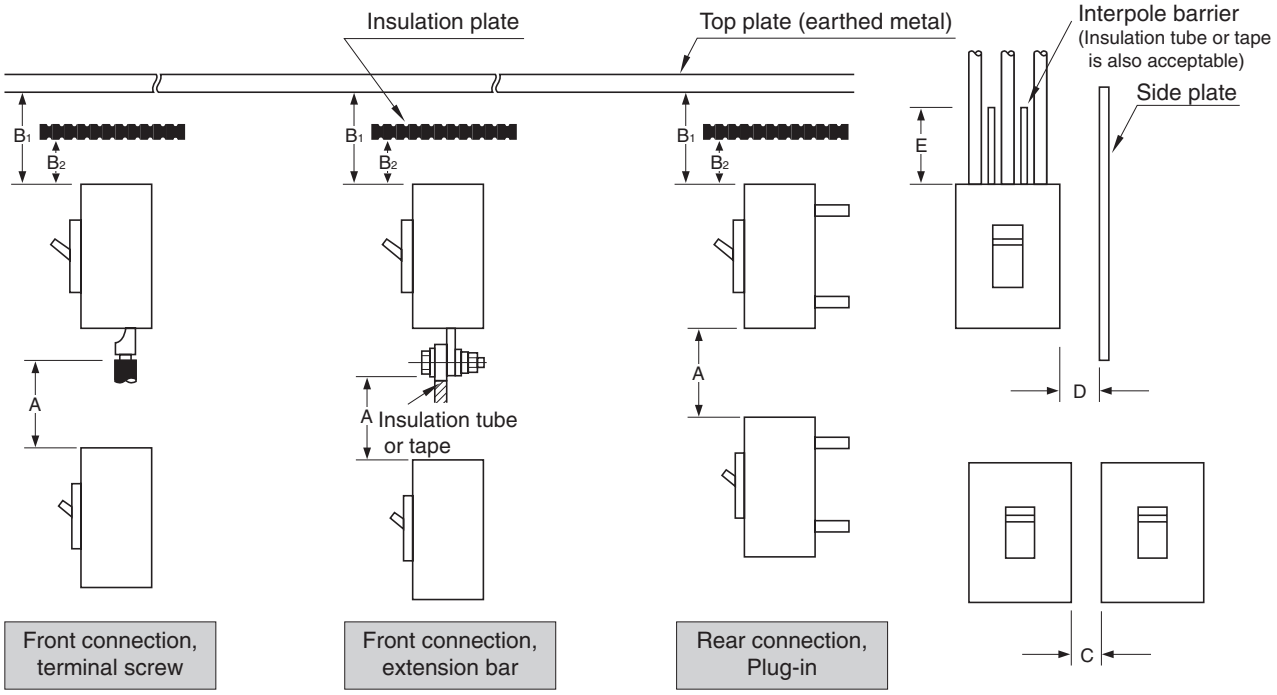

A . Distance from lower breaker to exposed live part of upper breaker terminal (front connection) or distance from lower breaker to end face of upper breaker (rear connection).
B_1 . Distance from end face of breaker to top plate.
B_2 . Distance from end face of breaker to insulation plate.
C . Gap between breakers.
D . Distance from side of breaker to side plate (earthed metal).
E . Dimension of insulation over exposed conductors.

Insulation distance, mm (AC 460 V or less) Note ①

Molded Case Circuit Breakers

Series	Breaker	A Note②	B1	B2		C	D	E
Economical	E50-SF E100-SF	30	10	10	✻	Possible to set close	25	Not less than the length of the bare live part Note ③
	E250-SF	50	40	40	✻	Possible to set close	50	Not less than the length of the bare live part Note ③
Standard	S50-SF	30	30	10	✻	Possible to set close	25	Not less than the length of the bare live part Note ③
	S125-SF	30	30	10	✻	Possible to set close	25	Not less than the length of the bare live part Note ③
	S100-NF S125-NF	50	50	10	✻	Possible to set close	25	Not less than the length of the bare live part Note ③
	S250-SF	50	50	40	✻	Possible to set close	50	Not less than the length of the bare live part Note ③
	S225-NF S250-NF	50	50	40	✻	Possible to set close	50	Not less than the length of the bare live part Note ③
	S400-CF S400-NF S400-NE	100	80	60	✻	Possible to set close	80	Not less than the length of the bare live part Note ③
	S630-CF S630-NF S630-NE S800-CF S800-NF S800-NE	120	100	80		Possible to set close	80	Not less than the length of the bare live part Note ③
	S1250-NE	150	120	80		Possible to set close	80	Not less than the length of the bare live part Note ③
	S1600-NE	150	150	100		Possible to set close	100	Not less than the length of the bare live part Note ③
High-fault Level	S50-GF S100-GF S125-GF	75	60	25	✻	Possible to set close	25	Not less than the length of the bare live part Note ③
	S225-GF S225-GE S250-GF	100	80	60	✻	Possible to set close	50	Not less than the length of the bare live part Note ③
	S400-GF S400-GE	100	80	60	✻	Possible to set close	50	Not less than the length of the bare live part Note ③
	S400-PF S400-PE	120	120	80	✻	Possible to set close	80	Not less than the length of the bare live part Note ③
	S600-RF S600-RE S630-PF S630-PE S800-RF S800-RE S800-PF S800-PE	150	120	80		Possible to set close	80	Not less than the length of the bare live part Note ③
	S1250-GE	150	150	100		Possible to set close	100	Not less than the length of the bare live part Note ③
Current-limiting	H100-NF H125-NF H225-NF	100	80	60	✻	Possible to set close	50	Not less than the length of the bare live part Note ③
	H400-NE	120	120	80	✻	Possible to set close	80	Not less than the length of the bare live part Note ③
	H630-NE H800-NE	120	120	80		Possible to set close	80	Not less than the length of the bare live part Note ③
	TL-1000NE TL-1200NE	150	150	100		Possible to set close	100	Not less than the length of the bare live part Note ③
	L100-NF L125-NF L225-NF	100	80	60	✻	Possible to set close	50	Not less than the length of the bare live part Note ③
	L400-NE	120	120	80	✻	Possible to set close	80	Not less than the length of the bare live part Note ③
	L630-NE L800-NE	120	120	80		Possible to set close	80	Not less than the length of the bare live part Note ③
Motor protection	S100-NM	50	50	10	✻	Possible to set close	25	Not less than the length of the bare live part Note ③
	S225-NM	50	50	40	✻	Possible to set close	50	Not less than the length of the bare live part Note ③

Notes:

①. Required to allow free and uninterrupted flow of arc gases. Ensure additional clearance or insulation distance if required to perform wiring, barrier installation or electrical work or to meet the need for more insulation distance between bare live parts and grounded metal members in a switchboard or the like.

②. The figures are for lower breakers.

③. For front connection breakers, insulate all exposed conductors of the line side until the breaker end. If interpole barriers are packed, be sure to use the barriers; more over, insulate all exposed conductors by insulating tape or the like so that the tape overlaps with the barriers.

✻. If using extension bars (optional), ensure the insulation distance specified for the application.

5 Reverse connection

The breakers are available for normal connection by default. Reverse connection is optionally allowed. See the tables below.

Breaker	AC240V	AC415V	AC450V	AC690V
TB-5S, TB-5P, TB-5D E50-SF, E100-SF, E250-SF H100-NF, L100-NF H125-NF, L125-NF H225-NF, L225-NF	◎	◎	◎	×
S50-SF, S50-GF, S100-NF, S100-GF S100-NM, S100-NN S125-SF, S125-NF, S125-GF S125-NN, S125-SN S225-NF, S225-GF, S225-GE, S225-NM S250-SF, S250-NF, S250-GF, S250-SN S400-CF, S400-NF, S400-NE, S400-NN S400-GF, S400-GE, S400-PF, S400-PE H400-NE, L400-NE S630-CF, S630-NF, S630-NE, S630-RF, S630-PF S630-RE, S630-PE, S630-GN S800-CF, S800-NF, S800-NE, S800-RF, S800-PF S800-RE, S800-PE, S800-NN H630-NE, L630-NE, H800-NE, L800-NE S1250-NE, S1250-GE, S1250-NN S1600-NE, S1600-NN XS2000NE, XS2000NN TL-1000NE, TL-1200NE	◎	◎	◎	◎

◎ : Standard.
× : Not available.

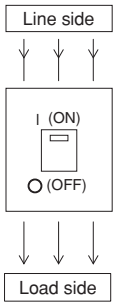

Normal connection

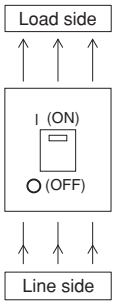

Reverse connection

Molded Case Circuit Breakers

6 Lists of breaker mounting screws

Series	Breaker	Number of poles	Front-connected (FC)		Rear-connected (RC)		Plug-in (PM) for switchboards			
							Standard		High-fault Level	
			Screw size	Qty	Screw size	Qty	Screw size	Qty	Screw size	Qty
Economical	**E50-SF**	2	Pan head M4×35	2	Pan head M4×35	2	Pan head M4×35	2	—	—
		3	Pan head M4×35	2	Pan head M4×35	2	Pan head M4×35	2	—	—
	E100-SF	2	Pan head M4×65	2	Pan head M4×65	2	Pan head M4×65	2	—	—
		3	Pan head M4×65	2	Pan head M4×65	2	Pan head M4×65	2	—	—
	E250-SF	2	Pan head M4×55	2	Pan head M4×55	2	Pan head M4×65	2	—	—
		3	Pan head M4×55	2	Pan head M4×55	2	Pan head M4×65	2	—	—
Standard	**S50-SF**	2	Pan head M4×61	2	Pan head M4×61	2	Pan head M4×75	2	—	—
		3	Pan head M4×61	2	Pan head M4×61	2	Pan head M4×75	2	—	—
	S50-GF	3	Pan head M4×55	2	Pan head M4×55	2	Pan head M4×58	2	Pan head M4×80	2
		4	Pan head M4×55	4	Pan head M4×55	4	Pan head M4×58	4	Pan head M4×80	4
	S100-NF, S100-GF	2	Pan head M4×55	2	Pan head M4×55	2	Pan head M4×58	2	Pan head M4×80	2
		3	Pan head M4×55	2	Pan head M4×55	2	Pan head M4×80	2	—	—
		4	Pan head M4×55	4	Pan head M4×55	4	Pan head M4×58	4	Pan head M4×80	4
	S125-SF	2	Pan head M4×61	2	Pan head M4×61	2	Pan head M4×75	2	—	—
		3	Pan head M4×61	2	Pan head M4×61	2	Pan head M4×75	2	—	—
		4	Pan head M4×61	2	Pan head M4×61	2	—	—	—	—
	S125-NF, S125-GF	2	Pan head M4×55	2	Pan head M4×55	2	Pan head M4×58	2	Pan head M4×80	2
		3	Pan head M4×55	2	Pan head M4×55	2	Pan head M4×80	2	—	—
		4	Pan head M4×55	4	Pan head M4×55	4	Pan head M4×58	4	Pan head M4×80	4
	S100-NM	3	Pan head M4×55	2	Pan head M4×55	2	—	—	—	—
	S225-NF, S225-GF **S250-NF, S250-GF**	2	Pan head M4×55	2	Pan head M4×55	2	Pan head M4×65	2	Pan head M4×80	2
		3	Pan head M4×55	2	Pan head M4×55	2	Pan head M4×80	2	—	—
		4	Pan head M4×55	4	Pan head M4×55	4	Pan head M4×65	4	Pan head M4×80	4
	S250-SF	2	Pan head M4×55	2	Pan head M4×55	2	Pan head M4×65	2	—	—
		3	Pan head M4×55	2	Pan head M4×55	2	Pan head M4×65	2	—	—
		4	Pan head M4×55	4	Pan head M4×55	4	Pan head M4×65	4	—	—
	S225-GE	3	Pan head M4×90	2	Pan head M4×90	2	Pan head M4×100	2	Pan head M4×115	4
		4	Pan head M4×90	4	Pan head M4×90	4	Pan head M4×100	4	Pan head M4×115	4
	S225-NM	3	Pan head M4×55	2	Pan head M4×55	2	—	—	—	—
	S400-CF, S400-NF **S400-GF** **S400-NE, S400-GE** **S400-PF, S400-PE**	3	Pan head M6×100	4	Pan head M6×100	4	Pan head M6×100	4	Pan head M6×120	4
		4	Pan head M6×100	4	Pan head M6×100	4	—	—	Pan head M6×120	4
	S630-CF, S630-NF, S630-RF **S630-PF, S630-NE, S630-RE** **S630-PE**	3	Pan head M8×45	4	Pan head M8×45	4	Cap nut ✻	4	Pan head M8×45	4
	S800-CF, S800-NF, S800-RF **S800-PF, S800-NE, S800-RE** **S800-PE,**	4	Pan head M8×45	4	Pan head M8×45	4	—	—	Pan head M8×45	4
	S1250-NE, S1250-GE	3	Pan head M8×50	4	Pan head M8×50	4	Cap nut ✻	4	—	—
		4	Pan head M8×50	4	Pan head M8×50	4	—	—	Cap nut ✻	4
	S1600-NE	3	Pan head M8×50	4	Pan head M8×50	4	—	—	—	—
		4	Pan head M8×50	4	Pan head M8×50	4	—	—	—	—
Current limiting	**H100-NF, H125-NF, H225-NF** **L100-NF, L125-NF, L225-NF**	3	Pan head M4×90	2	Pan head M4×90	2	Pan head M4×100	2	Pan head M4×115	4
		4	Pan head M4×90	4	Pan head M4×90	4	Pan head M4×100	4	Pan head M4×115	4
	H400-NE, L400-NE	3	Pan head M6×140	4	Pan head M6×140	4	Pan head M6×140	4	Pan head M6×160	4
		4	Pan head M6×140	4	Pan head M6×140	4	—	—	Pan head M6×160	4
	H630-NE, L630-NE **H800-NE, L800-NE**	3	Pan head M8×85	4	Pan head M8×85	4	Cap nut ✻	4	Pan head M8×85	4
		4	Pan head M8×85	4	Pan head M8×85	4	—	—	Pan head M8×85	4
Switch disconnector	**S125-SN**	3	Pan head M4×61	2	Pan head M4×61	2	Pan head M4×75	2	—	—
		4					—	—		
	S100-NN, S125-NN	3	Pan head M4×55	2	Pan head M4×55	2	Pan head M4×58	2	Pan head M4×80	2
		4	Pan head M4×55	4	Pan head M4×55	4	Pan head M4×58	4	Pan head M4×80	4
	S250-SN	3	Pan head M4×55	2	Pan head M4×55	2	Pan head M4×65	2	—	—
		4	Pan head M4×55	4	Pan head M4×55	4	Pan head M4×65	4	—	—
	S400-NN	3	Pan head M6×100	4	Pan head M6×100	4	Pan head M6×100	4	Pan head M6×120	4
		4	Pan head M6×100	4	Pan head M6×100	4	—	—	Pan head M6×120	4
	S630-GN, S800-NN	3	Pan head M8×45	4	Pan head M8×45	4	Cap nut ✻	4	Pan head M8×45	4
		4	Pan head M8×45	4	Pan head M8×45	4	—	—	Pan head M8×45	4
	S1250-NN	3	Pan head M8×50	4	Pan head M8×50	4	Cap nut ✻	4	—	—
		4	Pan head M8×50	4	Pan head M8×50	4	—	—	Cap nut ✻	4
	S1600-NN	3	Pan head M8×50	4	Pan head M8×50	4	—	—	—	—
		4	Pan head M8×50	4	Pan head M8×50	4	—	—	—	—

✻. Width across flats of hex socket: 8 mm (M10), thread size: M8

Series	Breaker	Number of poles	Front-connected (FC)		Rear-connected (RC)		Plug-in (PM) for switchboards	
							Standard	
			Screw size	Qty	Screw size	Qty	Screw size	Qty
Standard	**XS2000NE**	3,4	Hex socket head M10×160	4	Hex socket head M10×120	4	—	—
Current limiting	**TL-1000NE, TL-1200NE**	3,4	Pan head M8×50	4	Pan head M8×50	4	Cap nut ✻	4
Non-automatic trip breaker	**XS2000NN**	3,4	Hex socket head M10×160	4	Hex socket head M10×120	4	—	—

Notes:

①. The length of mounting screws may differ from the standard one if the breaker is equipped with external accessories (motor operator, external operation handle, etc.) Consult the operating Instructions of external accessories for details.

✻. Width across flats of hex socket: 8 mm (M10), thread size: M8

6 Accessories

1. TemBreak2 Electronic OCR (Standard type)

(1) Overcurrent trip characteristics

■ TemBreak2 electronic OCR for S400-NE

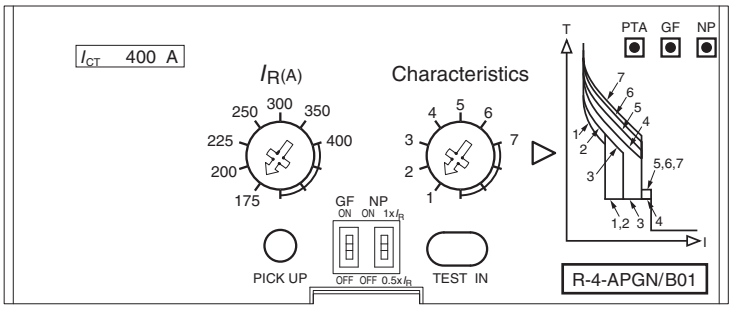

■ TemBreak2 OCR Specifications

CT rated current (I_{CT})	poles	Protection code	Long time, Short time, Instantaneous	Preferential trip alarm (PTA)	Ground falut trip (GF)	Neutral protection (NP)
			A	P	G	N
250	3	A	●	—	—	—
	3	AP	●	●	—	—
	4	A	●	—	—	—
	4	AP	●	●	—	—
	4	AN	●	—	—	●
	4	APN	●	●	—	●
400 630 800 1000 1250 1600	3	A	●	—	—	—
	3	AP	●	●	—	—
	3	AG	●	—	●	—
	3	APG	●	●	●	—
	4	A	●	—	—	—
	4	AP	●	●	—	—
	4	AN	●	—	—	●
	4	APN	●	●	—	●
	4	AGN	●	—	●	●
	4	APGN	●	●	●	●

■ OCR characteristics for S400-NE

Characteristics No.			1	2	3	4	5	6	7
Long time-delay pick-up current (A) : (I_R)			CT rated current : (I_{CT}) = 250A 125, 150, 175, 200, 225						
			CT rated current : (I_{CT}) = 400A 175, 200, 225, 250, 300, 350, 400						
Long time-delay time settings (s) : (t_R)			11	21	21	5	10	19	29
			at 200%×(I_R)			at 600%×(I_R)			
			Setting tolerance ±20%						
Short time-delay pick-up current (A) : (I_{sd})			2.5	2.5	5	10	10	10	10
			Setting tolerance ±15%						
Short time-delay time settings (s) : (t_{sd})			0.1	0.1	0.1	0.1	0.2	0.2	0.2
			Total clearing time +50ms, resettable time –20ms						
Instantaneous trip pick-up current (A) : (I_i)			(I_R)×1400% Setting tolerance ±20%		Max: (I_{CT})×1300%				
Option	Preferential trip alarm								
		Pick-up current (A) : (I_p)	(I_R)×80% Setting tolerance ±10%						
		Time-settings (s) : (t_p)	Definite time-delay characteristic, 40sec. Setting tolerance ±10%						
	Ground falut trip								
		Pick-up current (A) : (I_g)	(I_{CT})×20% Setting tolerance ±15%①						
		Time-settings (s) : (t_g)	Difinite time-delay characteristic, 0.2sec. Total tripping time +50ms, resettable time –20ms.						
	Neutral protection								
		Pick-up current (A) : (I_N)	(I_R)×100% or 50% selectable ②						
		Time-settings (s) : (t_N)	(t_N)=(t_R) Same as Long time-delay time settings						

Notes:
①. Ground fault trip is not available when (I_{CT}) is 250A.
②. In case of (I_R)<(I_{CT}), the setting tolerance becomes big when (I_N) is set at (I_R)×50%.
Characteristic No.4 will be applied as standard setting unless otherwise specified.

■ Applicable breakers

Frame size (A)	Type of breaker
225	S225-GE
400	S400-NE, S400-GE, S400-PE
	H400-NE, L400-NE
630	S630-NE, S630-RE, S630-PE, H630-NE, L630-NE
800	S800-NE, S800-RE, S800-PE, H800-NE, L800-NE
1250	S1250-NE, S1250-GE
1600	S1600-NE

TemBreak2 electronic OCR allows you to achieve a wide range of protection simply by setting two dials located on the front of the breakers; one for selecting the rated current and the other for selecting a protection characteristic.
Coming standard with seven protection characteristics, the OCR provides optimum selective coordination between upstream breakers and downstream breakers and/or loads.
(5 protection characteristics for S225-GE)

Characteristic 1: For generator protection

Characteristics 2, 3 and 4: For general feeder protection. The possibility of selecting one from three options makes it easy to achieve selective coordination with upstream or downstream breakers.

Characteristics 5, 6 and 7: For motor protection. The selection of the option best suited to motor startup characteristics provides an optimum protection solution to motors.

If you require a characteristic which is not available as a preset on our standard electronic protection unit, send us the details and we will program a customized characteristic to your specification.
Note: Characteristic is programmable within certain limits. Contact us for details.

Time/Current characteristic curves

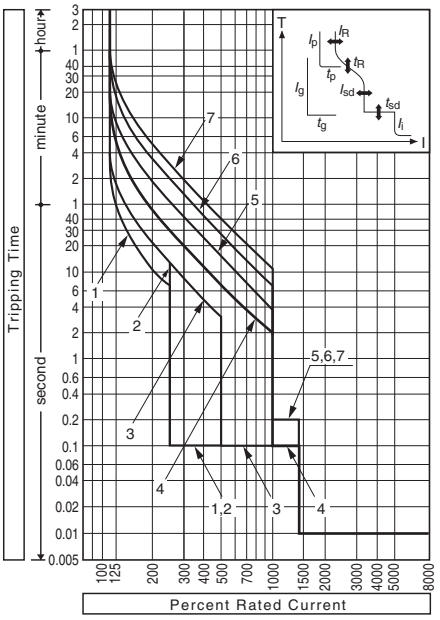

Ex.S400-NE

(2) Optional OCR functions

■ Pretrip alarm (PTA)

The pretrip alarm function causes the alarm LED to flash when the load current exceeds 80% of the rated current (I_R) and, after 40 seconds, provides a contact output (1a). The contact output can be used to provide an alarm. The PTA function uses RMS sensing and hence does not suffer a malfunction due to harmonics. Control power and the OCR controller (supplied by Terasaki) are required to use this function.

Note ① : When the OCR controller is installed on the breaker, the breaker cannot be equipped with a terminal block for connection to the shunt trip device and undervoltage trip device.

● Specifications of OCR controller

Control voltage ② (Rated voltage)	AC100 – 120 V or AC200 – 240 V
Current consumption, VA	2VA

Note ② : The control voltage must be 85 to 110% of the rated voltage. Please state the rated voltage when ordering.

Operating time (s) [t_P]	40 secs (fixed definite time-delay) setting tolerance is ± 10%.		
Output contact	Normally open contact, (1a) Integral lead is standard. length (450mm)		
		Resistive load	Inductive load
Rating of contact	250V AC	125V A (2A max)	20V A (2A max)
	220V DC	60W (2A max)	10W (2A max)
Tripped indication	Pick-up LED flickers		

NOTE: the pick-up LED flickers at a higher current than [I_P].
When higher current flows continuously for 40 secs, the contact (1a) automatically resets.

● OCR controller connection diagram

Applicable breakers: S225-GE

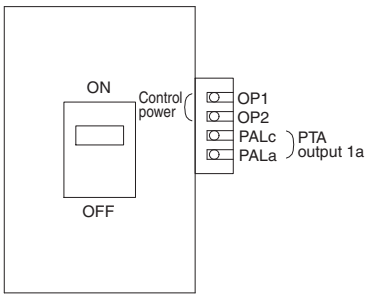

Note ③ : Separate installation of the OCR controller is not available.

Applicable breakers: S400-NE, S400-GE, S400-PE, H400-NE, L400-NE
S630-NE, S630-RE, S630-PE, H630-NE, L630-NE
S800-NE, S800-RE, S800-PE, H800-NE, L800-NE
S1250-NE, S1250-GE, S1600-NE

OCR controller installed on the breaker

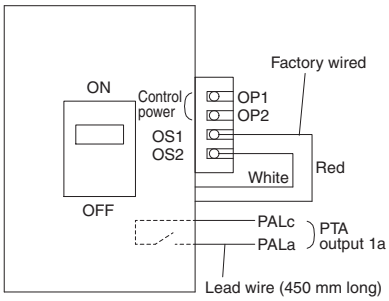

OCR controller installed external to the breaker

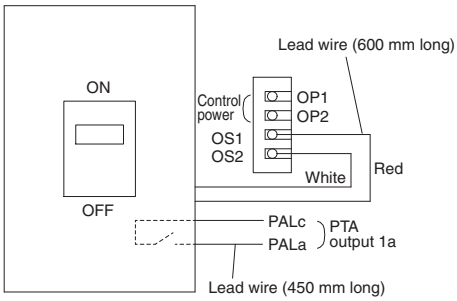

Note ④ : Standard installation of the OCR controller is on the right side of the breaker.
Separate installation is standard for the flush-mounted breakers.

1. TemBreak2 Electronic OCR (Standard type)

(2) Optional OCR functions

- **Mounting dimensions and terminal arrangement of the OCR controller installed on the breaker**

Applicable breakers: S225-GE

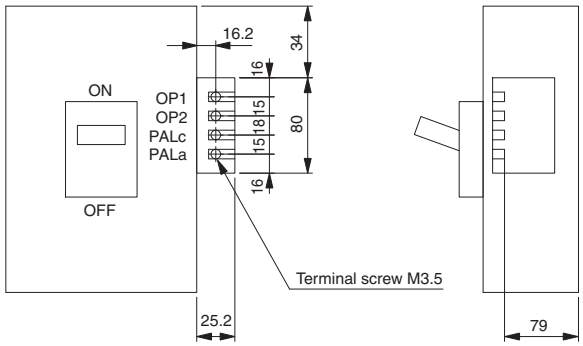

Notes: 1. Tightening torque of terminal screws: 0.9 – 1.2 N·m
2. Applicable wire size: 2.0 mm^2 max

Applicable breakers		A (mm)	B (mm)	C (mm)	D (mm)
S400-NE, S400-GE, S400-PE	3P, 4P	71	74	25.2	16.2
H400-NE, L400-NE	3P, 4P	71	111	25.2	16.2
S630-NE, S630-RE, S630-PE S800-NE, S800-RE, S800-PE	3P, 4P	62.5	74	25.2	16.2
H630-NE, L630-NE H800-NE, L800-NE	3P, 4P	62.5	111	25.2	16.2
S1250-NE, S1250-GE	3P	33	72	21	12
	4P	43	72	21	12
S1600-NE	3P	33	92	21	12
	4P	43	92	21	12

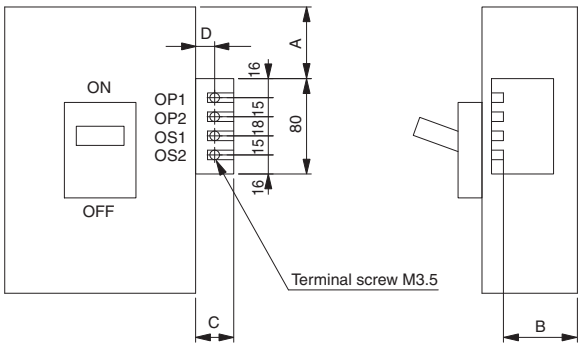

Notes: 1. Tightening torque of terminal screws: 0.9 – 1.2 N·m
2. Applicable lead wire size: 2.0 mm^2 max

- **Outline of the OCR controller installed external to the breaker**

Applicable breakers:
S400-NE, S400-GE, S400-PE
H400-NE, L400-NE
S630-NE, S630-RE, S630-PE
H630-NE, L630-NE
S800-NE, S800-RE, S800-PE
H800-NE, L800-NE
S1250-NE, S1250-GE
S1600-NE

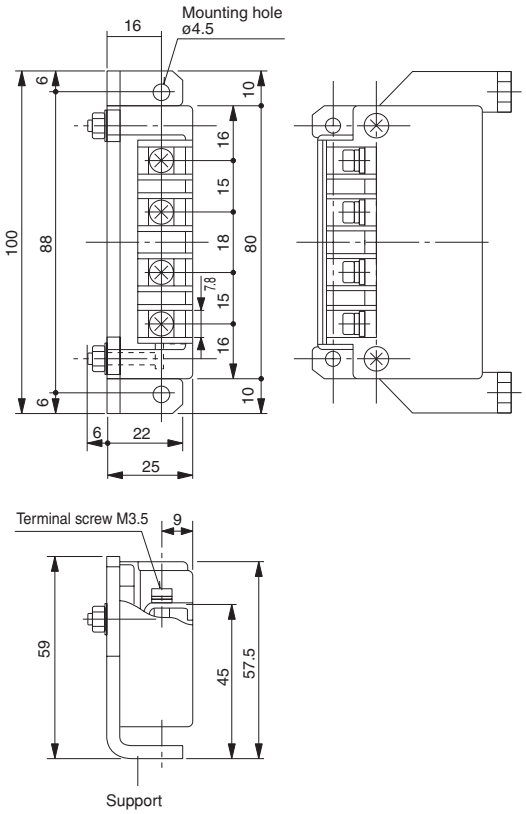

■ Ground fault trip (GF)

The ground fault trip pickup current is 20% of the CT rated current (I_{CT}). The GF function provides protection against fire that may be caused by arcing ground fault current. The GF function is not available when I_{CT} is 250A.

Note: Separate type neutral CT is required when the GF function is added to a 3-pole breaker used in a 3-phase, 4-wire system. Contact us for details.

■ N-phase protection (NP)

The NP function is available on 4-pole breakers and provides protection to the neural conductor in a 3-phase, 4-wire system against overcurrent. The NP pickup current (I_N) can be selected with 1.0 or 0.5 × I_R rated current. For S225 and H225, I_N is 1.0 × I_R only. Characteristic of N-phase protection (t_N vs I_N) is identical to characteristic of phase protecion (t_R vs I_R).

(3) How to change the tripping characteristics

The electronic breakers are designed so that their protective functions, i.e., long time delay trip, short time delay trip, instantaneous trip, ground fault trip and pretrip alarm functions, can be adjusted depending on a change in load or layout of power distribution lines.

Outer view

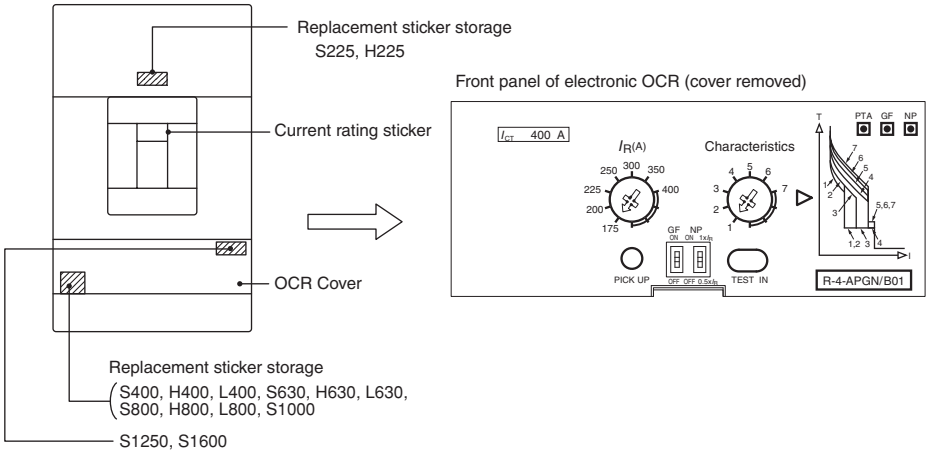

Item	Rated current	Long time delay trip, short time delay trip, instantaneous trip, ground fault trip, pretrip alarm
Adjusting procedure	**• Turn the breaker to OFF position before changing the settings.** 1. Peel the sealing sticker off and remove the cover. 2. Rotate the "I_R(A)" dial to the desired position using a flatblade screwdriver. 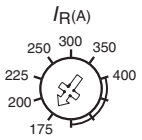 3. Take an appropriate current rating sticker and a sealing sticker from the replacement sticker storage. 4. Peel the existing current rating sticker off and affix the replacement current rating sticker. 5. Reinstall the cover and affix the replacement sealing sticker.	**• Turn the breaker to OFF position before changing the settings.** 1. Peel the sealing sticker off and remove the cover. 2. Rotate the "Characteristics" dial to the desired position using a flatblade screwdriver. 3. Take a sealing sticker from the replacement sticker storage. 4. Reinstall the cover and affix the replacement sealing sticker.

2. TemBreak Electronic OCR

(1) Overcurrent trip characteristics

■ TemBreak electronic OCR for XS2000NE

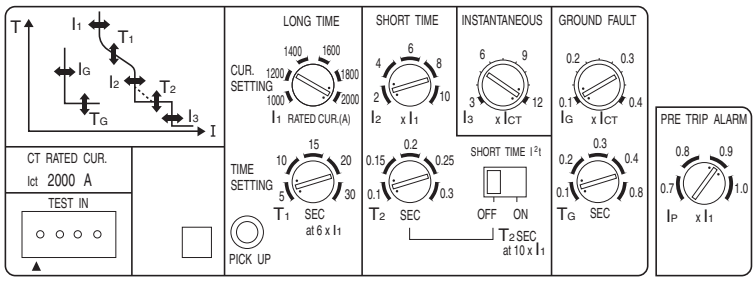

■ Applicable breakers

Frame size (A)	Type of breaker
1000	TL-1000NE
1200	TL-1200NE
2000	XS2000NE

Standard Protective Characteristics

The electronic type TemBreak incorporates an adjustable long time-delay, short time-delay and instantaneous trips, enabling co-ordination with fuses on the high voltage side and down stream breakers.

Adjustable LTD

Essential for general industrial plants and generator protection

Ramp Characteristic [I²t], STD

The ramp characteristic [I²t] enables precise co-ordination with thermal magnetic MCCBs or fuses. The ramp characteristic or the definite time-delay characteristic can be used by operating the OFF-ON switch (on for[I²t] ramp characteristic).
The definite time-delay characteristic is 1000% of the rated current [I_1]

■ OCR characteristics for XS2000NE

CT rated current (A) (I_{CT})	2000
Long time-delay pick-up current (A) (I_1)	1000, 1200, 1400, 1600, 1800, 2000
Long time-delay time settings (S) (T_1)	(5–10–15–20–30) at (I_1) x 600% current Setting tolerance ±20%
Short time-delay pick-up current (A) (I_2)	(I_1) x 200, 400, 600, 800, 1000% Setting tolerance ± 15%
Short time-delay time settings (S) (T_2)	Opening time (0.1, 0.15, 0.2, 0.25, 0.3) in the definite time-delay. Total clearing time is +50ms and resettable time –20ms for the time-delay settings
Instantaneous trip pick-up current (A) (I_3)	Continuously adjustable from (I_{CT}) x 300 ~ 1200%. Setting tolerance ±20%
Pre-trip alarm pick-up current (A) (I_P) (optional)	(I_1) x 70, 80, 90, 100% Setting tolerance ±10%
Pre-trip alarm time setting (S) (T_P) (optional)	40 fixed definite time-delay. Setting tolerance ±10%
Ground fault trip pick-up current (A) (I_G) (optional) ⑥④	Continuously adjustable from (I_{CT}) x 10 ~ 40% Setting tolerance ±15%
Ground fault trip-time setting (S) (T_G) (optional) ⑥④	Opening time (0.1, 0.2, 0.3, 0.4, 0.8) in the definite time- delay. Total clearing time is +50ms and resettable time –20ms for the time-delay settings

NOTE: The underlined values will be applied as standard ratings unless otherwise specified when ordering

Time/Current characteristic curves

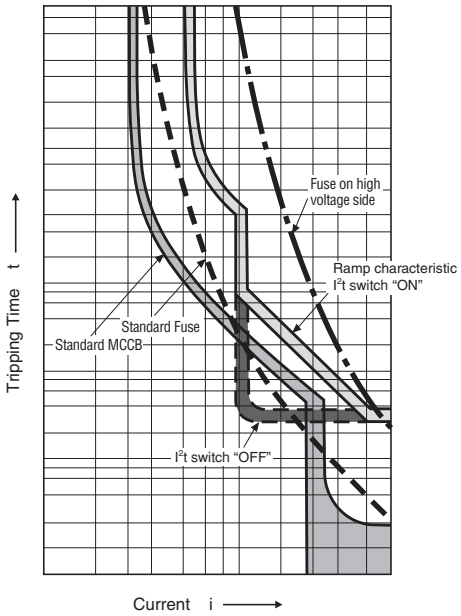

(2) Optional OCR functions

■ Pretrip alarm (PTA)

The pretrip alarm function causes the alarm LED to flash when the load current exceeds the pre-set current value and, after 40 seconds, provides a contact output (1a). The contact output can be used to provide an alarm. The PTA function uses RMS sensing and hence does not suffer a malfunction due to harmonics. Control power and the OCR controller (supplied by Terasaki) are required to use this function.

● PTA specifications

Pick-up current (A) [I_P]

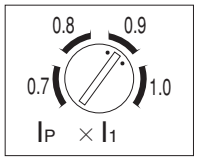

Adjustable steps of 70, 80, 90, 100% of the selected rated current [I_1].
Setting tolerance ± 10%
Note: The long time-delay trip does not operate 'first' when the pick-up current is adjusted to 100% of the rated current [I_1].

Operating time (s) [T_P]		40 secs (fixed definite time-delay) setting tolerance is ± 10%.		
Output contact		Normally open contact, (1a) Integral lead is standard length (450mm)		
			Resistive load	Inductive load
	Rating of contact	250V AC	125V A (2A max)	20V A (2A max)
		220V DC	60W (2A max)	10W (2A max)
Tripped indication ①		Pick-up LED flickers		

Note ①: the pick-up LED flickers at a higher current than [I_P].
When higher current flows continuously for 40 secs, the contact (1a) automatically resets.
PTA is automatically reset at a lower current than [I_P].

● PTA Characteristics

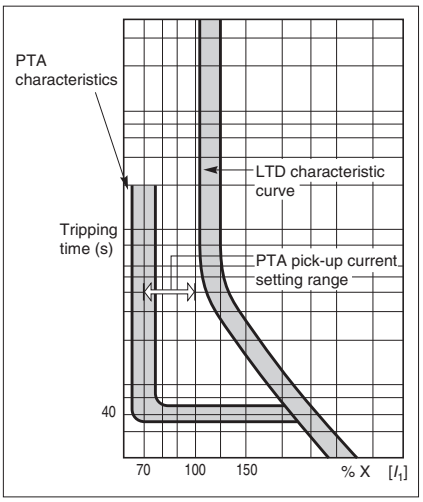

● OCR controller (PTA and trip indication)

The OCR controller is installed in the left hand of the breaker (standard). This can also be installed externally to the breaker (please specify when ordering).

● Specifications of OCR controller

Control voltage ② (Rated voltage)	AC100 - 120 V or AC200 - 240 V
Current consumption, VA	2VA

Note ②: The control voltage must be 80 to 110% of the rated voltage.
Please state the rated voltage when ordering.

● OCR controller connection diagram

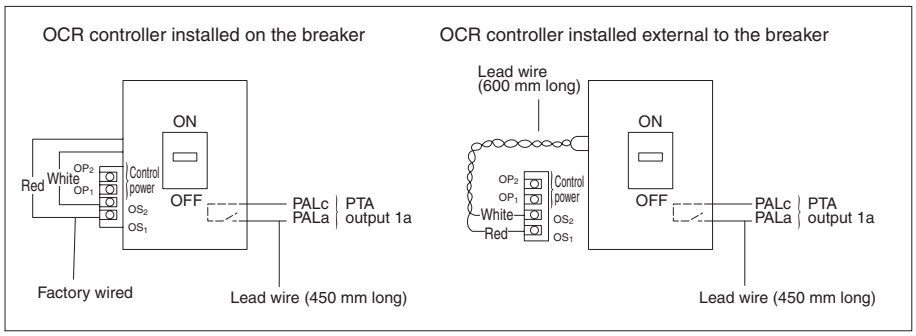

● Outline of the OCR controller installed external to the breaker

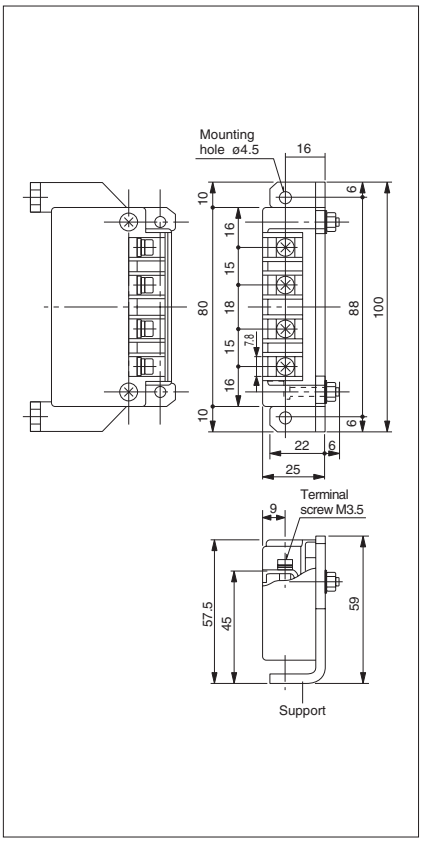

● Mounting dimensions and terminal arrangement of the OCR controller installed on the breaker

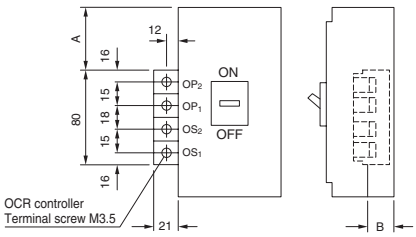

Dimension table (mm)

Type of MCCB	A		B
	With UVT contoroller	Without UVT contoroller	
TL-1000NE TL-1200NE	51	114	92
XS2000NE	54	180	115

Remarks 1): Standard torque for the terminal screws M3.5 —— 0.9~1.2N.m
2): Connected cable size —— Max. 2.0mm²

2. TemBreak Electronic OCR

(2) Optional OCR functions

■ Ground fault trip (GF)

The ground fault trip pickup current is 10 to 40% of the CT rated current (I_{CT}). The GF function provides protection against fire that may be caused by arcing ground fault current. Note that a separate type neutral CT is required when the GF function is added to a 3-pole breaker used in a 3-phase, 4-wire system. Contact us for details.

● GF Specifications

Pick-up current (A): [I_G] 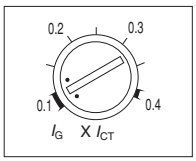	Continuously adjustable from 10 to 40% of the rated CT current [I_{CT}]. Setting tolerance ±15%
Time-delay (S) [T_G] 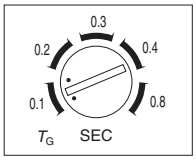	The GFT has a definite time-delay characteristic and is adjustable in steps of 0.1, 0.2, 0.3, 0.4 and 0.8s. Total clearing time is +50ms and resettable time is –20ms for the pre-set time-delay.

● GF characteristics

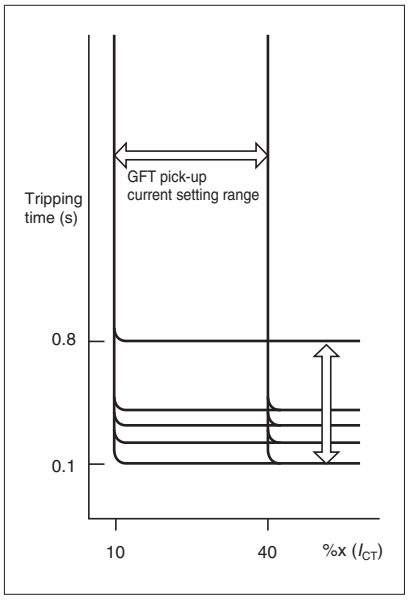

■ Trip indicators

The LEDS, when lit, indicate which trip function tripped the breaker; Long time-delay (LTD), short time-delay/instantaneous (ST/INST) or ground fault (GF) (control power required)
If a pre-trip alarm (PTA) is fitted, the LED control power can be used (common). See page 6-7 for PTA. This is not applicable to high instantaneous trip breakers (See page 4-3).

● Trip indicator display

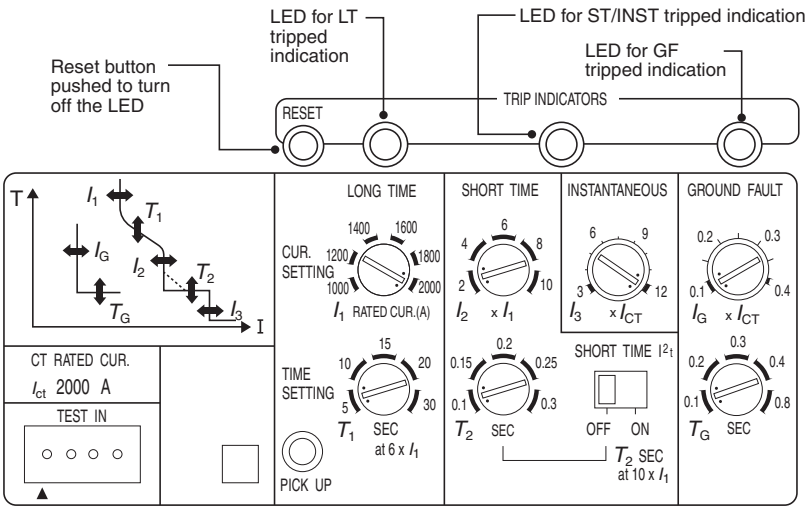

Example XS2000NE

(3) How to chanege the tripping characteristics

The electronic breakers are designed so that their protective functions, i.e., long time delay trip, short time delay trip, instantaneous trip, ground fault trip and pretrip alarm functions, can be adjusted depending on a change in load or layout of power distribution lines.

Outer view

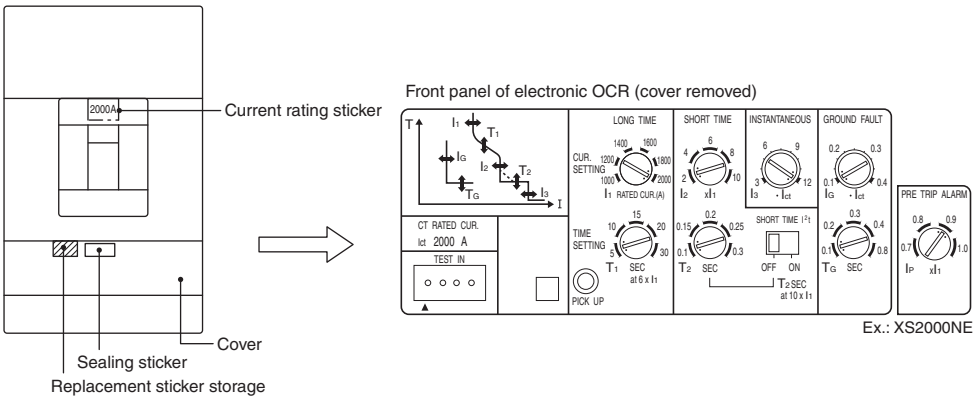

Item	Rated current	Long time delay trip, short time delay trip, instantaneous trip, ground fault trip, pretrip alarm
Adjusting procedure	**• Turn OFF the breaker before changing the settings.** 1. Peel the sealing sticker off, loosen the cover mounting screws and remove the cover. 2. Rotate the "RATED CUR. (A)" dial using a flatblade screwdriver so that the black points on the dial point the desired position. 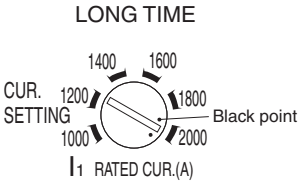 (Ex.: XS2000NE) 3. Take an appropriate current rating sticker and a sealing sticker from the replacement sticker storage. 4. Peel the existing current rating sticker off and affix the replacement current rating sticker. 5. Reinstall the cover and affix the replacement sealing sticker.	**• Turn OFF the breaker before changing the settings.** 1. Peel the sealing sticker off, loosen the cover mounting screws and remove the cover. 2. Rotate the desired dial using a flatblade screwdriver so that the black points on the dial point the desired position. The instantaneous trip and ground fault trip pickup current can be continuously adjusted. 3. Take a sealing sticker from the replacement sticker storage. 4. Reinstall the cover and affix the replacement sealing sticker.

1. Overview

The following internally mounted accessories are available. See the tables of possible combinations of internally mounted accessories on pages 6-12 to 6-14 for the number of accessories that can be installed per breaker and their locations.

Alarm switch — AL

Provides an electrical indication that the breaker is in a tripped state.

Auxiliary switch — AX

Provides an electrical indication that the breaker is in a ON or OFF state.

Shunt trip device — SH

Electrically trips the breaker open from a remote location.

Undervoltage trip device — UV

Trips the breaker open when the voltage of the power distribution line lowers. This device can also be used to trip the breaker open from a remote location.

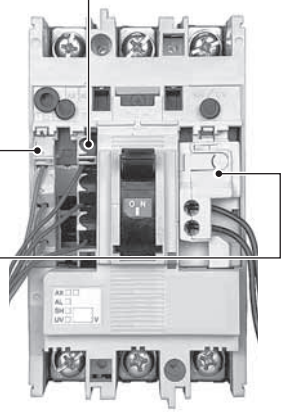

Caution: Combined use of SH and UV is not available.

Termination or ending of lead wires from accessories

There are three manners in which lead wires from accessories are ended or terminated, as shown below:

Lead wires are open:

- Standard lead wire ending manner for front-connected, rear-connected and flush-mounted breakers. Lead wires from accessories are derived vertically, thereby enabling contact mounting.

- **Lead wire specifications**

TemBreak2 series

accessory	Grade	Size	Finished OD	Length	Color
SH	Heat resistant	0.5mm²	3mmø	500mm	Black
UV			3mmø	500mm	Black
AX			1.8mmø	700mm	Gray
AL			1.8mmø	700mm	Black

XS, TL series

accessory	Grade	Size	Finished OD	Length	Color
SH	Heat resistant	0.5mm²	3mmø	450mm	Black
UV			3mmø	450mm	Black
AX			1.8mmø	450mm	Gray
AL			1.8mmø	450mm	Black

Lead wires are terminated in a terminal block:

- Optional lead wire termination manner for front-connected and rear-connected breakers.
- There are two types of terminal blocks available depending on the direction in which lead wires are derived; vertical and horizontal. See pages 6-75 to 6-79 for details.

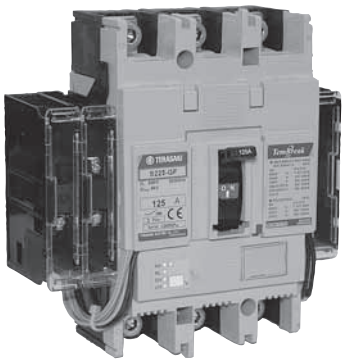

Lead wires are ended at auxiliary circuit (self-engaging) terminals:

- Standard lead wire ending manner for plug-in breakers.
- See pages 9-4 and 9-7 for the standard arrangement of auxiliary circuit terminals.
  Contact us for other arrangements.

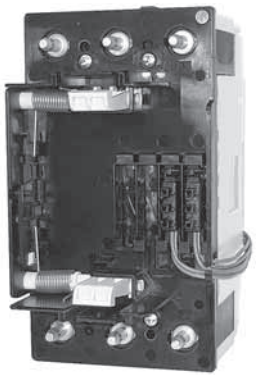

2. Connection diagrams and terminal numbers

Accessory	Combination symbol	Connection diagram and terminal No.	Remarks
Shunt trip device (SH)		• With anti-burn switch 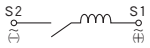	Applicable to E50-SF, E100-SF, E50-CM, TL-1000NE and TL-1200NE. Shunt trips are fitted with anti-burn switches.
		• Without anti-burn switch 	Applicable to other breakers except above breakers. Shunt trips are continuous rating without anti-burn switches.
Undervoltage trip device (UV)		For AC With UVT controller 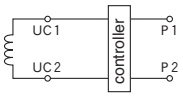 For DC 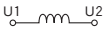	Applicable to E50-SF, E100-SF, TL-1000NE and TL-1200NE. UVT controller is required for AC UVT. See page 6-18 for the details.
			Applicable to other breakers except above breakers.
Auxiliary switch (AX)		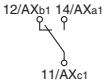	1pc Aux. SW installed.
		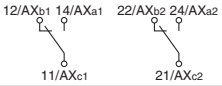	2pcs Aux. SW installed.
		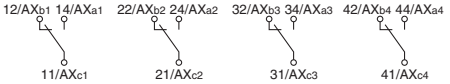	4pcs Aux. SW installed.
		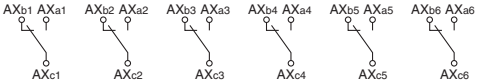	6pcs Aux. SW installed.
		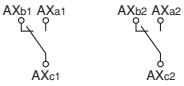	Applicable to E50-SF, E100-SF and E50-CM
Alarm switch (AL)		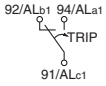	1pc Alarm. SW installed.
		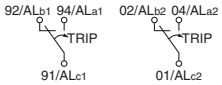	2pcs Alarm. SW installed. Available for S125-SF, S250-SF, S630, S800, S1250 and S1600.
			Applicable to E50-SF, E100-SF and E50-CM

3. Possible combinations

Molded Case Circuit Breakers

Type: Economical series					E250-SF			
Type: Standard series	S50-SF S125-SF	S50-SF S125-SF	S100-NF S125-NF	S100-NF S125-NF S225-NF S250-NF	S250-SF	S400-CF S400-NF S400-NE	S630-CF S630-NF S630-NE S800-CF S800-NF S800-NE	S1250-NE S1600-NE
Type: High-fault level series				S50-GF S100-GF S125-GF S225-GF S225-GE S250-GF		S400-GF S400-GE S400-PF S400-PE	S630-RF S630-RE S630-PF S630-PE S800-RF S800-RE S800-PF S800-PE	S1250-GE
Type: Current limiting series				H100-NF H125-NF H225-NF		H400-NE	H630-NE H800-NE	
Type: Current limiting series				L100-NF L125-NF L225-NF		L400-NE	L630-NE L800-NE	
Type: Motor protection series				S100-NM S225-NM				
Number of poles	2	3	2	3	3	3	3	3
Combinations of accessories: AX		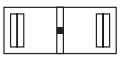		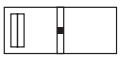	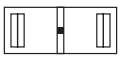	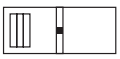	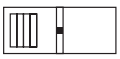	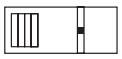
Combinations of accessories: AL								
Combinations of accessories: SH		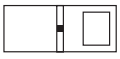		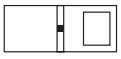	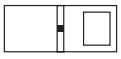	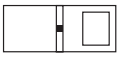	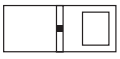	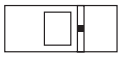
Combinations of accessories: UV								
Combinations of accessories: AX–AL								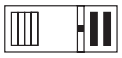
Combinations of accessories: AX–SH		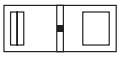		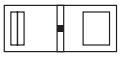	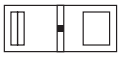	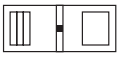	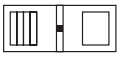	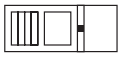
Combinations of accessories: AX–UV								
Combinations of accessories: AL–SH								
Combinations of accessories: AL–UV								
Combinations of accessories: AX–AL–SH								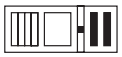
Combinations of accessories: AX–AL–UV								

Molded Case Circuit Breakers

Type: Economical series	**E50-SF**	**E50-SF**	**E100-SF**	**E100-SF**		
Type: Standard series						**XS2000NE**
Type: High-fault level series						
Type: Current limiting series					**TL-1000NE** **TL-1200NE**	
Number of poles ①	2	3	2	3	3	3
Combinations of accessories: AX						
Combinations of accessories: AL						
Combinations of accessories: SH						
Combinations of accessories: ② UV						
Combinations of accessories: AX–AL						
Combinations of accessories: AX–SH						
Combinations of accessories: AX–② UV						
Combinations of accessories: AL–SH						
Combinations of accessories: AL–② UV						
Combinations of accessories: AX–AL–SH						
Combinations of accessories: AX–AL–UV						

Notes:
① : For the four-pole type, see the column for the three-pole type.
② : A breaker with AC UVT is provided with an external UVT controller. See page 6-18.

Molded Case Circuit Breakers

Motor protection series

Type	**E50-CM**
Number of poles	3
Combinations of accessories: AX	
Combinations of accessories: AL	
Combinations of accessories: SH	
Combinations of accessories: UV	
Combinations of accessories: AX–AL	
Combinations of accessories: AX–SH	
Combinations of accessories: AX–UV	
Combinations of accessories: AL–SH	
Combinations of accessories: AL–UV	
Combinations of accessories: AX–AL–SH	
Combinations of accessories: AX–AL–UV	

3. Possible combinations

Molded Case Circuit Breakers

Switch disconnectors

Type	S125-SN	S100-NN S125-NN	S250-SN	S400-NN	S630-GN S800-NN	S1250-NN S1600-NN
Number of poles	3	3	3	3	3	3
Combinations of accessories: AX						
AL						
SH						
UV						
AX – AL						
AX – SH						
AX – UV						
AL – SH						
AL – UV						
AX – AL – SH						
AX – AL – UV						

Molded Case Circuit Breakers

Non-automatic breakers

Type	XS2000NN
Number of poles	3
Combinations of accessories: AX	
AL	
SH	
UV	
AX – AL	
AX – SH	
AX – ② – UV	
AL – SH	
AL – ② – UV	
AX – AL – SH	
AX – AL – ② – UV	

Notes:

② : A breaker with AC UVT is provided with an external UVT controller. See page 6-18.

4. Ratings and operation data of auxiliary and alarm switches

(1) Ratings of AX and AL

• The applicable load of the switch shall be no larger than the rating and no smaller than the minimum load.

Type of breaker	Standard							For microload ①		
	AC (V)			DC (V)			Minimum load	DC (V)		Minimum load
	Voltage (V)	Current (A)		Voltage (V)	Current (A)			Voltage (V)	Current (A)	
		Resistive load	Inductive load ②		Resistive load	Inductive load ②			Resistive load	
E250-SF **S50-SF** **S125-SF** **S50-GF** **S100-NF,S100-GF** **S125-NF, S125-GF** **S225-NF, S225-GF** **S225-GE** **S250-NF, S250-GF** **S400-CF, S400-NF** **S400-GF, S400-GE** **S400-PF, S400-PE** **S630-CF, S630-NF, S630-RF, S630-PF** **S630-NE, S630-RE, S630-PE** **S800-CF, S800-NF, S800-RF, S800-PF** **S800-NE, S800-RE, S800-PE** **S1250-NE** **S1600-NE** **S250-SF** **H100-NF, L100-NF** **H125-NF, L125-NF** **H225-NF, L225-NF** **H400-NF, L400-NE** **H630-NE, L630-NE** **H800-NE, L800-NE** **S100-NM** **S225-NM** **S125-SN** **S250-SN** **S100-NN** **S125-NN** **S400-NN** **S630-GN** **S800-NN** **S1250-NN** **S1600-NN**	480	—	—	250	—	—	DC15V 100mA	30	0.1	DC5V 1mA
	250	3	2	125	0.4	0.05				
	125	3	2	30	3	2				
E50-SF, E100-SF, E50-CM	480	—	—	250	0.2	0.03	DC6V 100mA DC24V 25mA	125	0.1	DC6V 5mA DC24V 1.25mA
	250	3	2	125	0.4	0.05		30	0.1	
	125	3	2	30	3	2				
XS2000NE **TL1000-NE, TL1200-NE** **XS2000NN**	480	3	2	250	0.3	0.3	DC5V 160mA DC30V 26.7mA	30	0.1	DC5V 1mA DC30V 1mA
	250	5	5	125	0.6	0.6				
	125	5	5	30	5	4				

Note: ① This is a custom-made product. When ordering for this product, specify that it is intended for microlead use.
Note: ② The inductive load means power factor of no smaller than 0.4 for AC and time constant of no larger than 7 ms for DC.

(2) Operation of AX and AL

Switch	Breaker status	[ON]	[OFF]	[TRIP]
Auxiliary switch (AX) status	12/AXb 14/AXa 91/AXc	11/AXc-14/AXa “Closed” 11/AXc-12/AXb “Open”	11/AXc-14/AXa “Open” 11/AXc-12/AXb “Closed”	11/AXc-14/AXa “Open” 11/AXc-12/AXb “Closed”
Alarm switch (AL) status	92/ALb 94/ALa TRIP 91/ALc	91/ALc-94/ALa “Open” 91/ALc-92/ALb “Closed”	91/ALc-94/ALa “Open” 91/ALc-92/ALb “Closed”	91/ALc-94/ALa “Closed” 91/ALc-92/ALb “Open”

5. Shunt trip device (SH)

Ratings of SHT

Type of breaker	Peak exciting current, A						
	Rated voltage	AC (V)			DC (V)			
		100-120	200-240	380-450	24	48	100-120	200-240
E250-SF S50-GF, S50-SF S100-NF, S100-GF S125-NF, S125-GF S125-SF S225-NF, S225-GF S225-GE S250-NF, S250-GF S250-SF S400-CF, S400-NF S400-GF, S400-GE S400-PF, S400-PE S630-CF, S630-NF, S630-RF, S630-PF S630-NE, S630-RE, S630-PE S800-CF, S800-NF, S800-RF, S800-PF S800-NE, S800-RE, S800-PE S1250-NE, S1250-GE S1600-NE H100-NF, L100-NF H225-NF, L225-NF H125-NF, L125-NF H400-NE, L400-NE H630-NE, L630-NE H800-NE, L800-NE S100-NM S225-NM S100-NN S125-SN S250-SN S400-NN S630-GN S800-NN S1250-NN S1600-NN		0.014	0.014	0.0065	0.03	0.03	0.011	0.011

Type of breaker	Peak exciting current, A						
	Rated voltage	AC (V)		DC (V)			
		100-115	200-480	24	48	100-115	200-230
E50-SF, E100-SF, E50-CM		3.4	0.83	1.6	0.71	0.4	0.16
XS2000NE, XS2000NN		1.1	① 0.4 (AC200-240V) 0.93 (AC380-480V)	2.52	1.55	0.67	0.35
TL1000-NE, TL1200-NE		1.1	0.93	2.52	1.55	0.67	0.35

Notes:
①: Exclusive use for 200V class and 400V class.
(1) The permissible voltage range is from 70% to 110% of the rated voltage.
Ensure that the voltage does not drop exceeding the permissible voltage range when SHT is actuated.
(2) Breaker contacts usually start opening within 30 ms after the rated voltage is applied to the breaker.

6. Undervoltage trip device (UV)

Ratings of UVT with Inst

Type of breaker	Power supply capacity, VA ①			Exciting current, mA ①		
Rated voltage	AC (V)			DC (V)		
	100-120	200-240	380-450	24	100-120	200-240
S50-GF **S100-NF, S100-GF** **S125-NF, S125-GF** **S225-NF, S225-GF** **S225-GE** **S250-NF, S250-GF** **S400-CF, S400-NF** **S400-NE** **S400-GF, S400-GE** **S400-PF, S400-PE** **H100-NF, L100-NF** **H125-NF, L125-NF** **H225-NF, L225-NF** **H400-NE, L400-NE** **S100-NM** **S225-NM** **S100-NN** **S400-NN**	1.4	2.8	2.3	23	10	10
S50-SF, S125-SF, S125-SN **E250-SF, S250-SF, S250-SN**	1.4	1.5	2.3	23	10	3.5

Note: ①: No UVT controller is required.
(1) Tripping voltage is from 35% to 70% of the rated voltage.
Resettable voltage is 85% or less of the rated voltage.
(2) Response time is below 50ms.

Type of breaker	Power supply capacity, VA ①						Exciting current, mA ①		
Rated voltage	AC (V)						DC (V)		
	100-110	115-120	200-220	230-240	380-415	440-450	24	100-120	200-240
S630-CF, S630-NF, S630-RF, S630-PF **S630-NE, S630-RE, S630-PE** **S800-CF, S800-NF, S800-RF, S800-PF** **S800-NE, S800-RE, S800-PE** **S1250-NE, S1250-GE** **S1600-NE** **H630-NE, L630-NE** **H800-NE, L800-NE** **S630-GN** **S800-NN** **S1250-NN** **S1600-NN**	1.5	1.6	2.4	2.9	2.1	2.3	29	13	11

Note: ①: No UVT controller is required.
(1) Tripping voltage is from 35% to 70% of the rated voltage.
Resettable voltage is 85% or less of the rated voltage.
(2) Response time is below 50ms.

Type of breaker	Power supply capacity, VA ②			Exciting current, mA ①		
Rated voltage	AC (V)			DC (V)		
	100-120	200-240	380-450	24	100-120	200-240
E50-SF, E100-SF	5 min	5 min	5 min	18.2	4.8	—
XS2000NE, XS2000NN	5 min	5 min	5 min	22.7	6	—
TL1000-NE, TL1200-NE	5 min	5 min	5 min	22.7	6	—

Notes: ①: No UVT controller is required.
②: Equipped with the UVT controller. See page 6-18 for specifications of the UVT controller.
(1) Tripping voltage is from 35% to 70% of the rated voltage.
Resettable voltage is 85% or less of the rated voltage.
(2) The UVT consists of a tripping mechanism and mechanism of maintain handle at OFF position when without the control voltage.
Please reset the breaker before turning the handle to ON position.

6. Undervoltage trip device (UV)

UVT controller

- See pages 6-17 for the breakers on which the UVT controller is installed.
  A breaker equipped with the AC UVT need a UVT controller. The UVT controller is installed on the breaker by default. Separate installation of the controller is also available on request. If the breaker is of flush-mounted (FP) type, the UVT controller is separately installed by default. Also a UVT controller (type XCU1D) with a time delay of less than 500 ms is available on request.

- **UVT controller connection diagram**

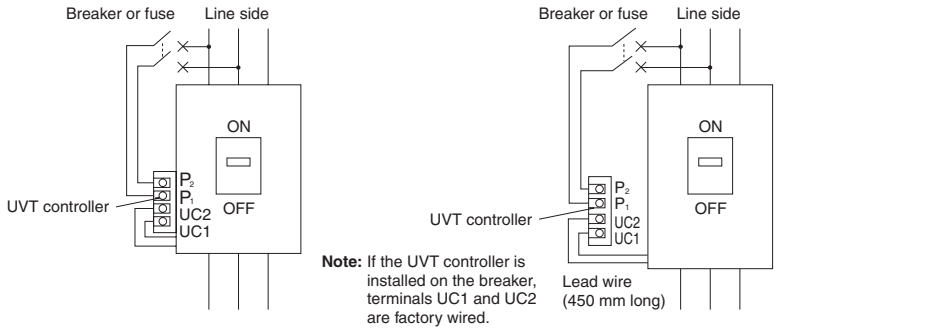

- Mounting dimensios and terminal arrangement of the UVT controller installed on the breaker

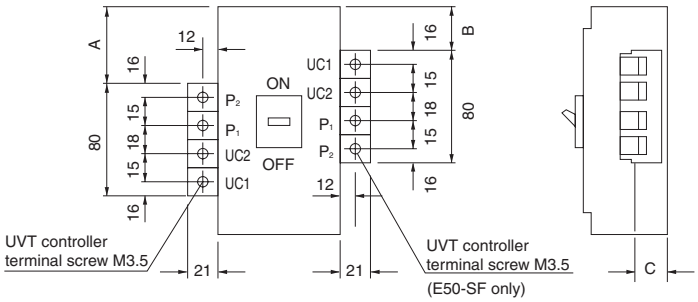

Mounting dimensions

Frame size (A)	Type of breaker	A	B	C
50	**E50-SF**	—	12.5	38
100	**E100-SF**	30.5	—	38
1000 1200	**TL-1000NE,TL-1200NE**	114 (138)	—	92
2000	**XS2000NE,XS2000NN**	180	—	115

Notes:
1. Dimension A shown in parentheses "( )" are the case fitted with OCR controller.
2. Tightening torque of terminal screws: 0.88 – 1.18 N·m
3. Applicable wire size: 2.0 mm² max

- Outline of the UVT controller installed external to the breaker

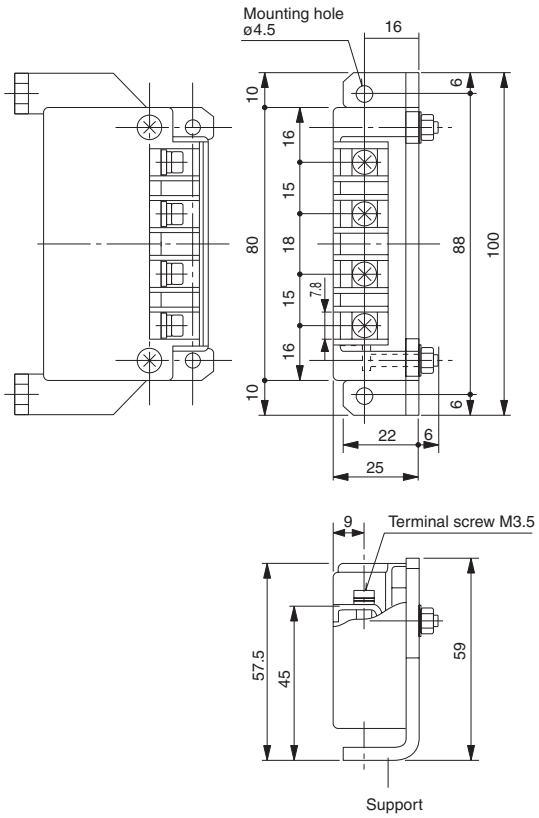

UVT with time delays for TemBreak2

TemBreak2 UVT are available with 500±300 msec time delays.
UVT controller is installed on the breaker.

Rating of UVT with time delay

Time delays: 500±300 msec.

Applicable breakers	Power supply capacity, VA							Exciting current, mA				
	Rated voltage	AC (V)						DC (V)				
		100-110	115-120	200-220	230-240	380-415	440-450	24	100-110	115-120	200-220	230-240
S50-GF, S100, S125-NF, S125-GF, S125-NN, E250, S225, S250-NF, S250-GF, H100, H125, H225, L100, L125, L225, S400, H400, L400		1.1	1.3	2.1	2.5	1.5	1.7	22	7.6	8.3	8.6	9.3
S50-SF, S125-SF, S125-SN E250-SF, S250-SF, S250-SN		1.4	1.4	1.5	1.5	2.3	2.3	23	8.3	8.3	3.5	3.5

Applicable breakers	Power supply capacity, VA							Exciting current, mA				
	Rated voltage	AC (V)						DC (V)				
		100-110	115-120	200-220	230-240	380-415	440-450	24	100-110	115-120	200-220	230-240
S630, S800, H630, L630, H800, L800, S1250, S1600		1.5	1.6	2.4	2.9	2.1	2.3	29	13	13	11	11

● Mounting dimensios and terminal arrangement of the UVT controller installed on the breaker

Applicable breakers		A (mm)	B (mm)	C (mm)	D (mm)
S50-GF, S100, S125-NF, S125-GF, S125-NN	2P, 3P, 4P	28.5	44	25.2	16.2
S50-SF, S125-SF, S125-SN	2P, 3P, 4P	34	55	24	15
S225, S250-NF, S250-GF (except **S225-GE**)	3P, 4P	33.5	44	25.2	16.2
E250-SF, S250-SF, S250-SN	3P, 4P	49.5	55	24	15
S225-GE H100, H125, H225 L100, L125, L225	3P, 4P	33.5	79	25.2	16.2
S400	3P, 4P	71	74	25.2	16.2
H400, L400	3P, 4P	71	111	25.2	16.2
S630, S800	3P, 4P	62.5	74	25.2	16.2
H630, L630, H800, L800	3P, 4P	62.5	111	25.2	16.2

• The UVT controller is installed in the right hand side of the breaker

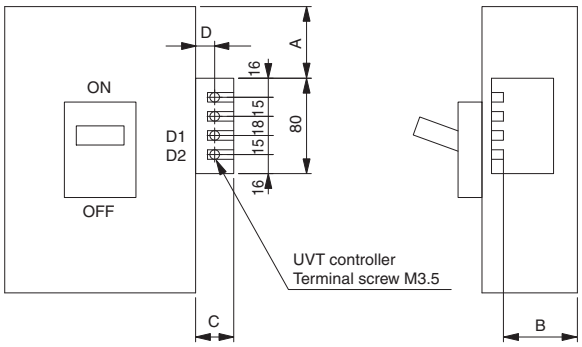

Notes: 1. Tightening torque of terminal screws: 0.9 – 1.2 N·m
2. Applicable lead wire size: 2.0 mm² max

Applicable breakers	A (mm)	B (mm)	C (mm)	D (mm)
S1250	114	72	21	12
S1600	114	92	21	12

• The UVT controller is installed in the left hand side of the breaker

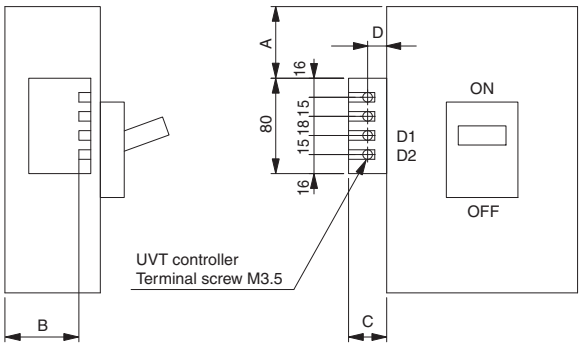

Notes: 1. Tightening torque of terminal screws: 0.9 – 1.2 N·m
2. Applicable lead wire size: 2.0 mm² max

1. Overview

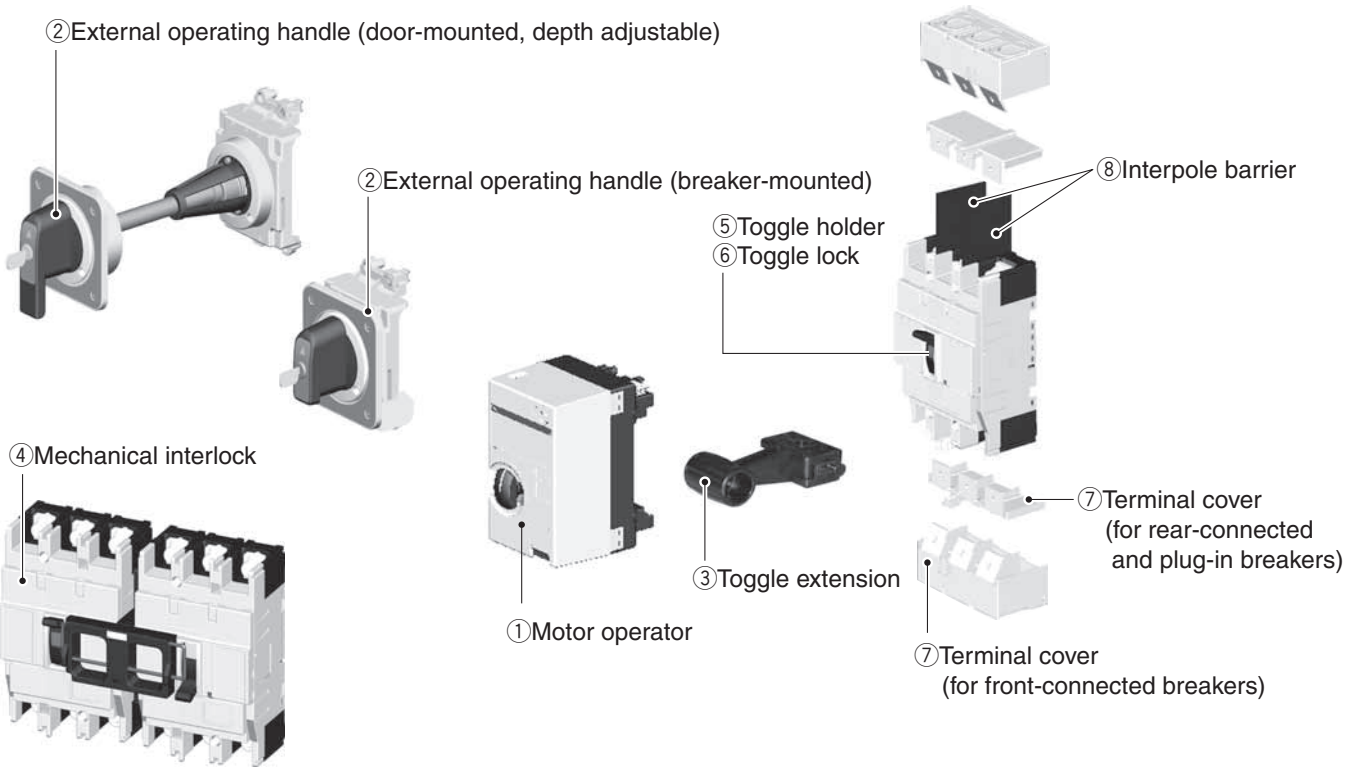

①Motor operator — MC

Allows electrical operation (closing, opening and resetting) of the breaker.

②External operating handle

Allows the breaker installed in a switchboard or box to be operated from outside.

Breaker-mounted — HB

The handle is mounted directly on the breaker.

Door-mounted (depth adjustable) — HP

The handle is coupled to the breaker through a shaft.

③Toggle extension — HA

Lessens the force require to close, open or reset the breaker. (Applicable to breakers with a frame size of 600A or larger)

④Mechanical interlock

Provides an interlock that allows one of two breakers to be closed.

Slide type — MS

⑤Toggle holder — HH

Holds the breaker on or off when simply fitted onto the breaker toggle.

⑥Toggle lock — HL

Allows the breaker to be locked on or off with commercially available padlocks.

⑦Terminal cover

Prevents live parts of the breaker from being exposed.

For front-connected breakers — CF

For rear-connected and plug-in breakers — CR

For front-connected breakers with cable clamps — CS

⑧Interpole barrier — BA

Enhances electrical insulation between poles and prevents short-circuit due to electrically conductive foreign matter.

⑨Terminal block — TF

Terminates lead wires from internally mounted accessories.

⑩Door flange — DF

Is intended to cover the cutout of a switchboard panel from the front.

⑪DIN rail adaptor

Allows the breaker to be mounted on DIN rails.

2. Toggle extension (HA)

Outline dimensions T2HA40L

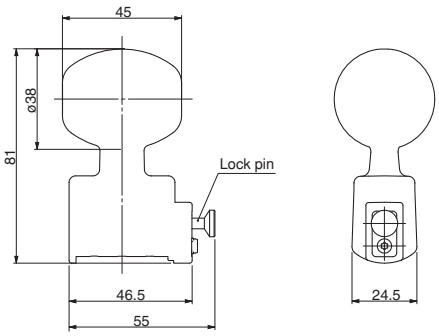

Frame size (A)	Type of breaker	Toggle extension Order code
400	**S400, H400, L400**	T2HA40L

Note: Optional. Specify when ordering.
Please be careful of pull lock pin when use with machanical interlock.
For more details please refer to the instruction manual.

Outline dimensions XHA9B, T2HA80

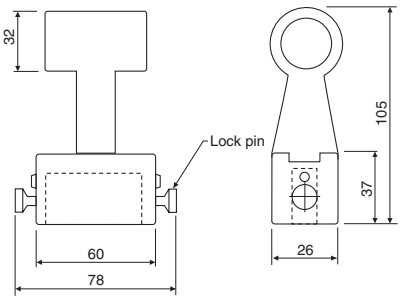

XHA10

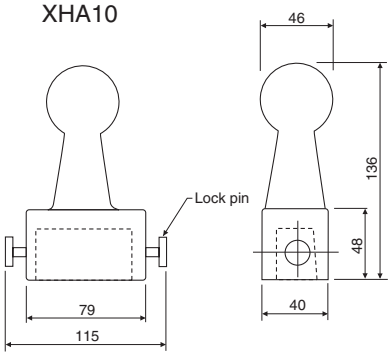

Frame size (A)	Type of breaker		Toggle extension Order codes
630	**S630-CF, S630-NF, S630-NE S630-RF, S630-RE, S630-PF, S630-PE S630-GN, H630-NE, L630-NE**	①	T2HA80
800	**S800-CF, S800-NF, S800-NE S800-RF, S800-RE, S800-PF, S800-PE S800-NN, H800-NE, L800-NE**	①	T2HA80
1000	**TL-1000NE**	②	XHA9B
1200	**TL-1200NE**		
1250	**S1250-NE, S1250-GE, S1250-NN**	②	T2HA80
1600	**S1600-NE, S1600-NN**		
2000	**XS2000NE, XS2000NN**	③	XHA10

Note: ① Optional. Specify when ordering.
② One is supplied with every five breakers. Please specify if more are required.
③ Supplied as standard.

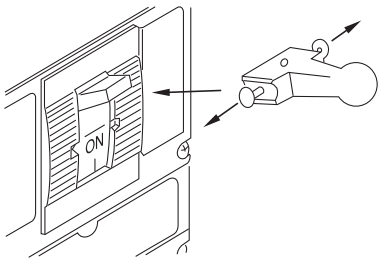

• Mounting and Removal
Pull lock pins out left and right in direction of the arrows, and slot the toggle extension in place.
The lock pins are spring loaded.
Removal-Pull out left and right hand lock pins and hold while removing.

3. Toggle holder (HH) and toggle lock (HL)

Toggle holder (HH)

Simply fitting the toggle holder onto the breaker toggle disables breaker operation without using padlocks.

Toggle lock (HL)

The toggle lock is a tool that locks the breaker on or off. When an overcurrent occurs, the breaker will trip even if the breaker toggle is locked in the ON position.
(Use commercially available padlocks).

Toggle holders/toggle locks

Frame size (A)	Type of breaker	Toggle holder		Figure	Toggle lock		Figure
		Order codes	Marking codes		Order codes	Marking codes	
50	**S50-SF**	T2HH25L	T2HH25L	1	T2HL25L	T2HL25L	2
100	**S100-NF** **S100-GF, S50-GF** **H100-NF** **L100-NF** **S100-NM** **S100-NN**	T2HH25	T2HH25	1	T2HL25	T2HL25	2
125	**S125-NF, S125-NN**	T2HH25	T2HH25	1	T2HL25	T2HL25	2
	S125-SF, S125-SN	T2HH25L	T2HH25L	1	T2HL25L	T2HL25L	2
	S125-GF **H125-NF** **L125-NF**	T2HH25	T2HH25	1	T2HL25	T2HL25	2
225	**S225-NF** **S225-GF, S225-GE** **H225-NF** **L225-NF** **S225-NM**	T2HH25	T2HH25	1	T2HL25	T2HL25	2
250	**S250-NF**	T2HH25	T2HH25	1	T2HL25	T2HL25	2
	E250-SF, S250-SF, S250-SN	T2HH25L	T2HH25L	1	T2HL25L	T2HL25L	2
	S250-GF	T2HH25	T2HH25	1	T2HL25	T2HL25	2
400	**S400-CF, S400-NF** **S400-NE** **S400-GF, S400-GE** **S400-PF, S400-PE** **H400-NE** **L400-NE** **S400-NN**	T2HL40 ①	T2HL40	3	T2HL40	T2HL40	3
630	**S630-CF, S630-NF** **S630-NE, S630-RF, S630-RE** **S630-PF, S630-PE** **H630-NE** **L630-NE** **S630-GN**	T2HL40 ①	T2HL40	3	T2HL40	T2HL40	3
800	**S800-CF, S800-NF** **S800-NE, S800-RF, S800-RE** **S800-PF, S800-PE** **H800-NE** **L800-NE** **S800-NN**	T2HL40 ①	T2HL40	3	T2HL40	T2HL40	3
1250	**S1250-NE** **S1250-GE** **S1250-NN**	T2HLX6	XKC9	6（l=86）	T2HLX6	XKC9	6（l=86）
1600	**S1600-NE** **S1600-NN**	T2HLX6	XKC9	6（l=86）	T2HLX6	XKC9	6（l=86）
50 100	**TB-5S, TB-5P** **TB-5D**	for 1P…TKB-50SGH （TAA-5CR）②	for 1P…TKB-50SGH （TAA-5CR）②	7（a）	TKB-50SG	TKB-50SG	5
		for 2P…TAA-52SH for 3P…TAA-53SH	for 2P…TAA-52SH for 3P…TAA-53SH	7（b）	—	—	—
	E50-SF, E100-SF, E50-CM	TKB-1DH	—	4	③	—	5
1000	**TL-1000NE**	XKC9	XKC9	6（l=86）	XKC9	XKC9	6（l=86）
1200	**TL-1200NE**	XKC9	XKC9	6（l=86）	XKC9	XKC9	6（l=86）
2000	**XS2000NE** **XS2000NN**	XKC10	XKC10	6（l=94）	XKC10	XKC10	6（l=94）

Notes: ①. Same as toggle lock.
②. Order codes shown in parentheses "(　) " are toggle caps. The colour is Red.
③. A hole must be drilled in the breaker toggle. Please state "with toggle lock (HL)" when ordering the breaker.

Fig. 1

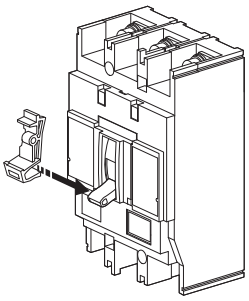

Fig. 2

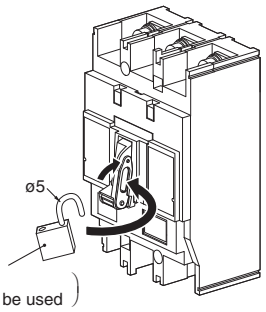

Fig. 3

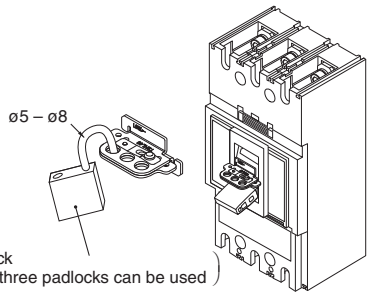

Fig. 4

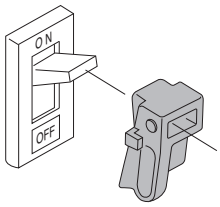

Fig. 5

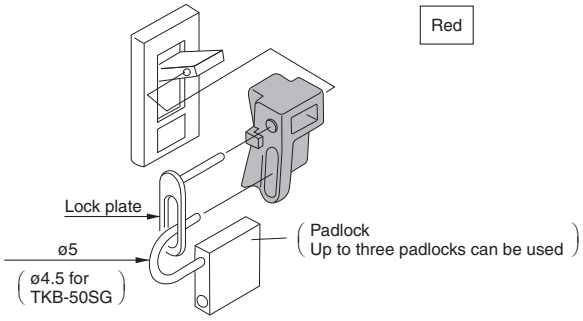

Fig. 6

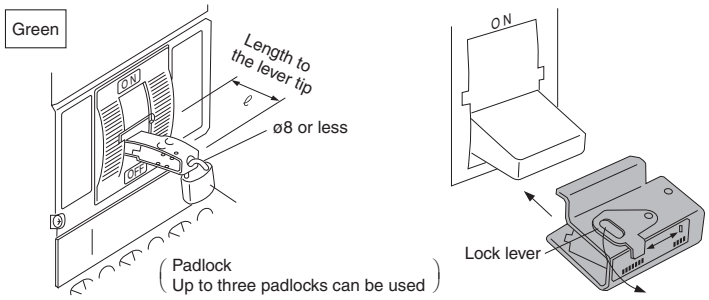

Toggle holder (HH): Make sure the lock lever of the toggle holder is in the UNLOCK position, fit the toggle holder onto the toggle and swing the lock lever to the LOCK position. The toggle is now locked on or off.

Toggle lock (HL): Padlock the toggle in the ON or OFF position.

Fig. 7

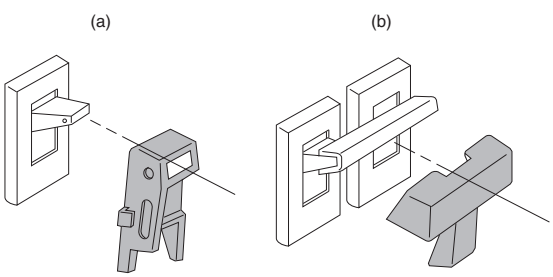

4. Motor operators (MC)

4-1. *TemBreak2*

Motor driven type

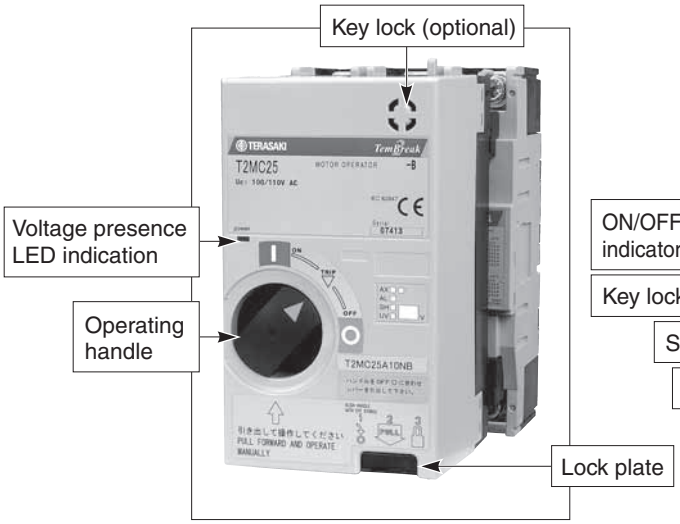

(T2MC12 / T2MC25/25L)

Spring charged type

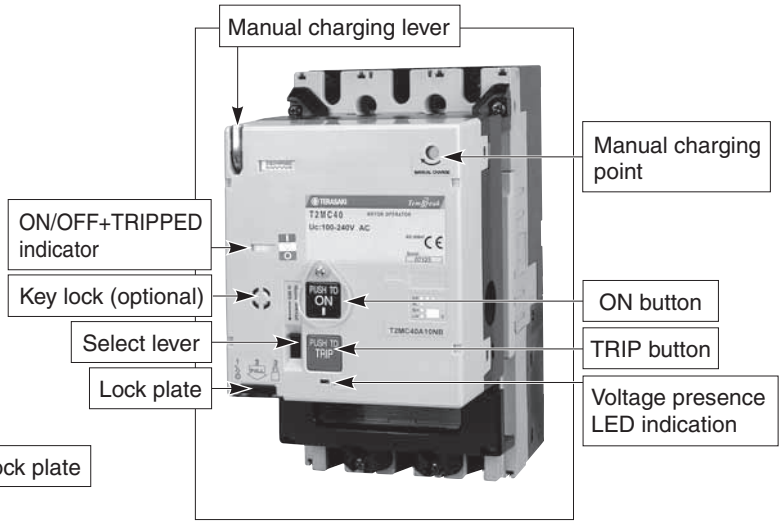

(T2MC40 / T2MC80)

Ratings and Specifications

		T2MC12	T2MC25	T2MC25L	T2MC40	T2MC80
Type of breaker				E250-SF		
		S50-GF S100-NF S100-GF S125-NF S125-GF	S225-NF S225-GF S225-GE S250-NF S250-GF	S250-SF	S400-CF,S400-NF S400-GF S400-NE,S400-GE S400-PF,S400-PE	S630-CF,S630-NF,S630-RF S630-PF,S630-NE,S630-RE S630-PE S800-CF,S800-NF,S800-RF S800-PF,S800-NE,S800-RE S800-PE
			H100-NF L100-NF H125-NF L125-NF H225-NF L225-NF		H400-NE,L400-NE	H630-NE,L630-NE H800-NE,L800-NE
		S100-NM	S225-NM			
		S100-NN S125-NN		S250-SN	S400-NN	S630-GN S800-NN
Rated operational voltage ①		●AC100-110V ●AC200-220V ●AC230-240V ●DC24V ●DC48V ●DC100-110V ●DC200-220V			●AC100-240V ●DC24-48V ●DC100-120V	●AC100-240V ●DC24-48V ●DC100-120V
Peak steady-state/ starting current, A ②	AC100-110V	4.5/8			—/1.9(ON) 1.3/3.8(OFF,RESET)	—/2.2(ON) 1.7/3.5(OFF,RESET)
	AC200-220V	4/8			—/3.3(ON) 0.9/3.8(OFF,RESET)	—/2.2(ON) 1.3/3.5(OFF,RESET)
	AC230-240V	3.5/7			—/3.3(ON) 0.9/3.8(OFF,RESET)	—/2.2(ON) 1.3/3.5(OFF,RESET)
	DC24V	18/26			—/9.2(ON) 4.3/9.8(OFF,RESET)	
	DC48V	12/18			—/3.8(ON) 2.0/5.2(OFF,RESET)	
	DC100-110V	2.2/6			—/1.3(ON) 1.2/2.9(OFF,RESET)	—/2.2(ON) 1.3/3.5(OFF,RESET)
	DC200-220V	2.2/5.5			—	—
Operation method		Motor driven (direct drive system)			Spring driven	Spring driven
Operating time, s at rated voltage	ON	0.1			0.1	0.1
	OFF/RESET	0.1③④			1.5③④	1.5③④
Operating switch ratings		100V 0.1A (Open voltage/current: 44 V/4 mA)⑤			100V 0.1A (Open voltage/current: 48 V/1 mA)	100V 0.1A (Open voltage/current: 48 V/1 mA)
Power supply required		300VA or higher			300VA or higher	300VA or higher
Dielectric withstand voltage (for one minute)		AC1500V (AC 1000 V for DC 24/48 V)			AC1500V (AC 1000 V for DC 24/48 V)	AC1500V (AC 1000 V for DC 24/48 V)
Weight		1.4kg			3.5kg	3.5kg

Notes:
① : Permissible operating range is 85 to 110%. A power transformer is available as option for AC380V or AC400-460V.
② : The currents shown are the maximum values at the maximum rated operational voltage.
③ : The operating time is the value when the rated operational voltage is supplied.
Loss of the control power in this operating time may cause the motor operator to fail to work.
④ : The motor operator is of a short time duty. Do not subject it to more than 10 continuous ON-OFF operations. If this occurs, allow the motor operator to cool for at least 15 minutes.
⑤ : When the rated operational voltage is DC24V the open voltage will be DC22V.

Features

★Installation and removal ease

T2MC12/25/25L: Simply rotate two knobs allows the motor operator to be installed on or removed from the breaker.
T2MC40/80: The compact and lightweight design enables easy installation and removal.

★High-speed, stable actuation

The operating time as short as up to 0.1 second makes it possible to use the motor operators for synchronized closing of breakers.

★Silent operation

T2MC12/25/25L use a direct drive system, providing operational silence.

★"Lock-in off" capability

This capability allows the breaker to be padlocked in the OFF state.
Up to thee padlocks with a 5 to 8 mm hasp diameter can be used.
Padlocks are not supplied.

★Compact and lightweight

T2MC40/80 is of compact design where the OCR of the breakers does not hide behind the operator, and thus does not need to be removed when changes in setting of the OCR are to be made.

Motorized operation

The motor operator has an input-signal self-hold circuit; closing the ON or OFF switch (see circuit diagrams shown bellow) momentarily allows activating the motor operator. To reset the tripped breaker to the OFF position, close the OFF (RESET) switch.
The voltage presence LED indication is on when the power is supplied to the motor operator.

■ Auto reset feature (optional)

The auto reset feature allows the breaker to be automatically reset approx. 1.5 seconds after the breaker trips open. This option contains auto-reset switches and does not require to use auxiliary or alarm switches installed in the breaker.

Note 1: that after the thermal OCR trips a thermal-magnetic breaker, the breaker cannot be immediately closed though it can be auto-reset. Wait for a few minutes after the tripping and provide a close signal to the breaker.

Note 2: Do not use an alarm switch to reset breakers.

This option resets the tripped breaker automatically, regardless of the cause of the tripping.

Breakers position in tripped state

Breakers position when the breaker has tripped differs depending on the motor operator being of standard type or being equipped with the auto reset feature (optional), as shown in the table below:

T2MC12 / T2MC25/25L

Cause of trip	Breakers position in tripped state	
	Standard type	With auto reset feature
Manually tripped	TRIP	○ (OFF)∗
SHT/UVT		
Overcurrent		

∗: The motor operator automatically provides OFF (reset) operation to the breaker.

T2MC40 / T2MC80

Cause of trip	Breakers position in tripped state	
	Standard type	With auto reset feature
Manually tripped	○ (OFF)∗	○ (OFF)∗
SHT/UVT	TRIP	
Overcurrent		

∗: The motor operator automatically provides OFF (reset) operation to the breaker.

Table 1 Electrical interlock cables

Interlock cables Order codes	Length	Remarks
T2MM25L05	500mm	for the electrical interlock between T2MC12 and T2MC25/25L.
T2MM25L15	1500mm	
T2MM40L06	600mm	for the electrical interlock between T2MC40 and T2MC80.
T2MM40L21	2100mm	
T2MM40S06	600mm	for the electrical interlock between T2MC40 and T2MC12/25/25L.
T2MM40S21	2100mm	

Manual operation

T2MC12/25/25L: Pull the operating handle out. Rotating the handle counterclockwise turns ON the breaker and clockwise turns OFF or resets the breaker.
T2MC40/80 : Switch to Manual operation from Motorized operation by Select lever. Use the spring charging handle to charge the spring and press the ON or TRIP button.
T2MC40/80 : When the TRIP button is pressed while the control power is supplied, the breaker turns OFF and if equipped with an alarm switch, it provides an output signal.

Press the TRIP button all the way in. Pressing the TRIP button halfway causes the breaker to go off without tripping, resulting in no alarm signal delivered even if the breaker is equipped with an alarm switch.

Operation precautions

1. Ensure that the actual operation voltage ranges from 85% to 110% of the rated one.
2. Use operation switches whose ratings and power capacity is as specified in the "Ratings and Specifications" table on the previous page.
3. Ensure an operating time of 50 msec or more when operating switches to turn on/off the breaker. A shorter operating time may result in failure in operating the breaker. In such a case, repeat the operation.
4. Do not continuously apply ON/OFF operating signals. ON/OFF signals must be separated by 0.3 sec or more. With the T2MC40/80, OFF and RESET operations must be 1.5 sec or more apart.
5. With the T2MC12/25/25L, do not connect alarm switches (AL) to the control circuit (OFF, ON or COM terminals). Doing so may cause the motor operator to fail to work.
6. If the motor operator is used in conjunction with a shunt trip device (SH), ensure that voltage supply to the SHT is shut off after the reset operation ends.
7. To operate multiple motor operators in batch, do not directly connect their control terminals in series, but through a separate relay for each. Otherwise, sneak circuits may form and cause the operators to fail to work.
8. Use noise filters if the control power supply of the motor operator is shared by peripheral devices. Otherwise, power supply noise may cause malfunction of the peripheral devices.
9. When the motors are used in conjunction with the mechanical interlock the electrical interlock should be provided between the motors in order to avoid the simultaneous closing. The followings are the available electrical interlock cables.

Control circuit diagrams of motor operators

T2MC12 / T2MC25 / T2MC25L

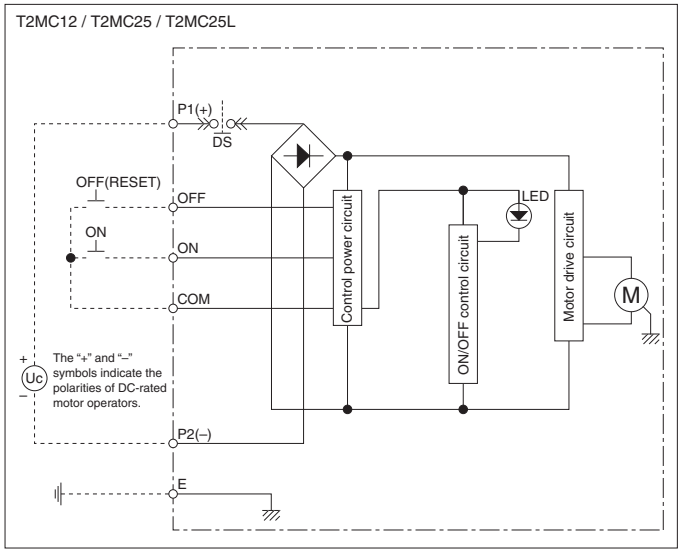

T2MC40 / T2MC80

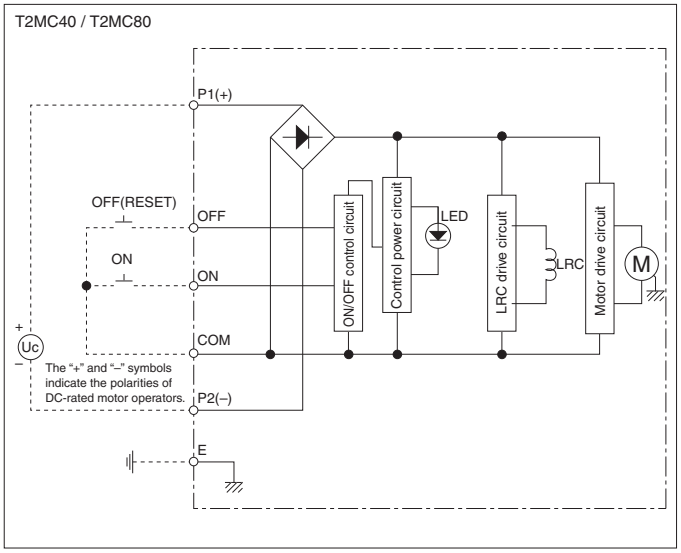

6

Accessories

4. Motor operators (MC)

4-2. TemBreak

Motor driven type

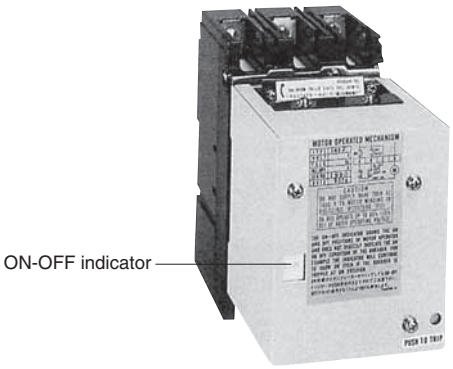

(XMB1)

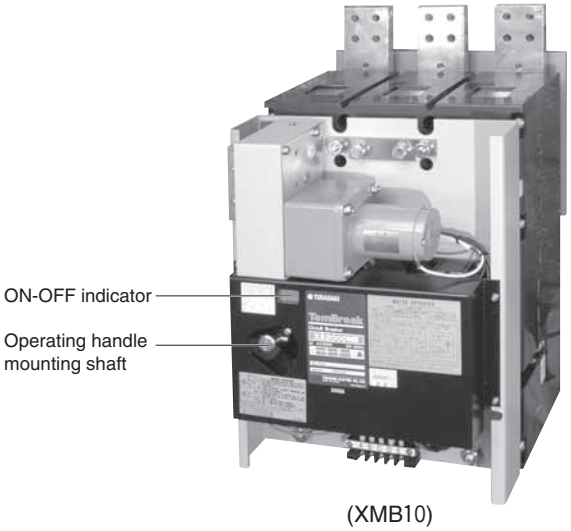

(XMB10)

Ratings and Specifications

		XMB1	XMB10
Series/type of breaker		E50-SF E100-SF	XS2000NE XS2000NN
Rated operational voltage ①		●AC100-110V ●AC200-220V ●DC100V ●DC110V	●AC100-110V ●AC200-220V ●DC100-110V
Auto reset		Optional ②	Optional ②
		Non	Non
Peak steady-state/ starting current, A ③	AC100-110V	2.0/4.5	0.85/3.5
	AC200-220V	1.0/2.0	1.3/2.1
	DC100V	—⑥	1.1/2.5
	DC110V	—⑥	1.2/3.0
Operation method		Motor driven	Motor driven
Operating time, s at rated voltage	ON	1.2	2.0
	OFF/RESET	0.85 ④⑤	1.6 ④⑤
Operating switch ratings		250V, 5A	250V, 5A
Power supply required		100 VA or higher	300VA or higher
Dielectric withstand voltage (for one minute)		AC1000V	AC1000V
Weight		1.8kg	16kg

Notes: ① Permissible operating range is 85 to 110%. A power transformer is available as option for AC380V or AC400-460V.

② Auto reset require to use auxiliary switch (1b) installed in the breaker. If the number of auxiliary switches is insufficient, actuate an external relay via an auxiliary switch (1a) and use the relay contact (1b) for auto reset.

③ The currents shown are the maximum values at the maximum rated operational voltage.

④ The operating time assume the motor operator is supplied with the rated operation voltage. Loss of the control power in this operating time may cause the motor operator to fail to work.

⑤ The motor operator is short-time rated. The number of continuous switching (ON-OFF) cycles must not exceed 10. After any 10 continuous switching cycles, provide a pause of at least 15 minutes to the motor operator for cooling.

⑥ Can be custom-made on request. An auto-reset switch cannot be used.

Operation mechanism

Motorized operation

■Breaker ON

Closing the ON switch throws the motor switch from contact status “1-2” to “3-2”, thereby activating the X relay and energizing the motor operator to turn the breaker ON. When the breaker turns ON, the motor switch is thrown from contact status “3-2” to “1-2”, thereby releasing the X relay to de-energize and stop the motor operator.

■Breaker OFF

Closing the OFF/RESET switch throws the motor switch from contact status “3-2” to “1-2”, thereby activating the Y relay and energizing the motor operator to turn the breaker OFF. When the breaker turns OFF, the motor switch is thrown from contact status “1-2” to “3-2”, thereby releasing the Y relay to de-energize and stop the motor operator.

■Breaker RESET

To reset the tripped breaker to the OFF position, close the OFF/RESET switch.

■Breaker auto-reset (optional)

Using the AUTO RESET auxiliary switch (1b) of the breaker allows resetting the breaker automatically when the breaker trips open.

Note: Do not use a normally closed switch as the ON switch. Doing so will result in “ON-TRIP-RESET-ON” cycles repeated unless the cause of tripping is removed.

Manual operation

Mount the operating handle onto the mounting shaft located on the front of the motor operator and rotate the shaft to turn the breaker ON or OFF. Rotating the handle anti-clockwise turns ON the breaker and clockwise turns OFF or resets the breaker. When the operating handle is mounted, the motorized operation mechanism is disengaged. Removing the handle engages the motorized operation mechanism to enable motorized operation.

■Handle switch

With the addition of a handle switch, the motor operator mechanism can be automatically brought to the manually operated position (ON or OFF) on removal of the handle, providing that the motor operator is powered up.

Operation precautions

- When the breaker is ON and is then tripped, the ON/OFF indicator on the motor operator will indicate ON until the breaker is reset.
  Note: The breaker's condition may differ.
- When a thermal-magnetic breaker is tripped by the thermal OCR, wait for a few minutes; then reset the breaker.
- When a breaker equipped with the UVT device is in the OFF position and the UVT device is deenergized, the breaker cannot be closed. To close such a breaker, perform ON and OFF (RESET) operation on the motor operator once and repeat ON operation. The breaker will be able to closed.
  (Breaker XS2000NE can be closed without the need for the ON and OFF (RESET) operation on the motor operator described above).
- Use noise filters if the control power supply of the motor operator is shared by peripheral devices. Otherwise, power supply noise may cause malfunction of the peripheral devices.

Control circuit diagrams of motor operators

XMB1

• For AC and DC

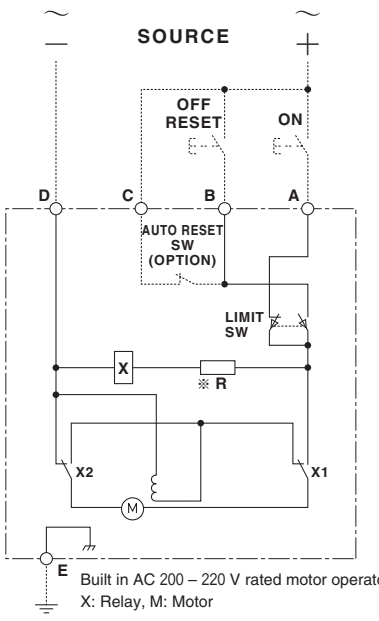

Built in AC 200 – 220 V rated motor operators.
X: Relay, M: Motor

XMB10

• For AC

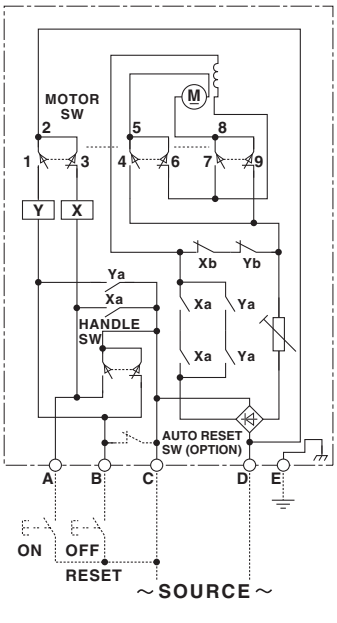

• For DC

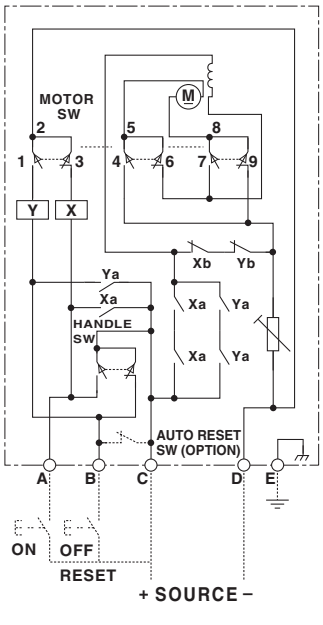

4. Motor operators (MC)

4-3. *TemBreak2*, TemBreak

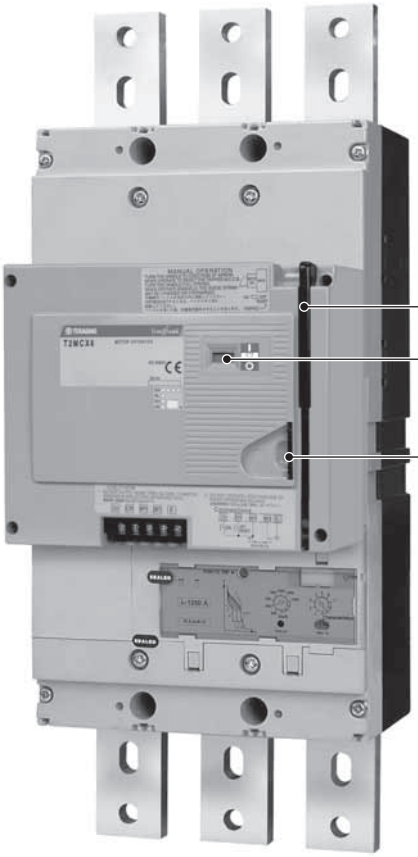

(T2MCX6)
Spring charged type

(XMD9)
Spring charged type

Ratings and Specifications

			T2MCX6	XMD9
Applicable breakers			S1250-NE, S1250-GE, S1250-NN S1600-NE, S1600-NN	TL-1000NE, TL-1200NE
Rated operational voltage ①			●AC100-115V ●AC200-230V ●DC100-110V ●DC24V	
Peak steady-state/ starting current, A ②	AC100-115V	ON	— / 3.1	
		OFF, RESET	1.8 / 6.0	
	AC200-230V	ON	— / 1.2	
		OFF, RESET	1.0 / 3.2	
	DC100-110V	ON	— / 0.8	
		OFF, RESET	1.1 / 4.2	
	DC24V	ON	— / 4.5	
		OFF, RESET	4.0 / 12.0	
Operation method			Spring charged	
Operating time, s @ rated voltage	ON (Max)		0.06	
	OFF/RESET		3 ③	
Power supply required			300VA	
Dielectric withstand voltage (for one minute)			AC1500V ④	
Weight			6.4kg	

Notes:
① : Permissible operating range is 85 to 110%. A power transformer is available as option for AC380V or AC400-460V.
② : The currents shown are the maximum values at the maximum rated operational voltage.
③ : The operating time is the value when the rated operational voltage is supplied.
Loss of the control power in this operating time may cause the motor operator to fail to work.
④ : Dielectric withstand voltage for DC 24 V motor is AC 500 V.

Features

★Clear status indication

Color indication: Red means ON, green OFF and white TRIPPED.

★Quick closing

Energy in a charged spring closes the breaker 60 msec or less.
High-speed, time-stable operation is ensured after multiple times of closing cycles.

★Equipped with anti-pumping circuit

When the closing signal is applied, TRIP-RESET-ON cycles are not repeated even though the cause of tripping is in the breaker.

★Ease of manual ON-OFF operation

Simply pressing the ON or OFF button closes or opens the breaker.

★"Lock-in off" capability

This capability allows the breaker to be padlocked in the OFF state.
Padlocks are not supplied.

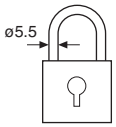

Operation mechanism

Motorized operation

■Breaker ON

Closing the ON switch activates the latch release coil (LRC), thereby releasing the closing spring to turn the breaker ON.

■Breaker OFF (RESET)

Closing the OFF/RESET switch activates the (Y) control relay, thereby starting the motor to turn the breaker OFF. At the same time, the closing spring is charged. The motor is deenergized when the breaker turns OFF (RESET).

■Breaker auto-reset (optional)

The auto-reset option uses an auto-reset switch (alarm switch) through which the closing spring is charged and the breaker is reset automatically after the breaker trips open. This option both for XMD and T2MC will be factory wired.

Notes: 1. For S1250 and S1600, installable alarm switch will be only 1 piece.
2. When the breaker is equipped with the auto-reset option, a signal self-hold circuit is required because the signal provided by the alarm switch is a pulse.
3. Not applicable to thermal-magnetic breakers

Manual operation *

■Breaker ON · OFF (RESET)

Pulling down the operating lever turns the breaker ON and OFF/REST alternately.
The handle returns to the original position when released.

※With auto-charge/discharge feature:
When manual ON operation is performed while the control power is applied, the handle switch (HS) operates to discharge the closing spring. OFF operation causes the closing spring to be charged.
When manual ON or OFF operation is performed while the control power is lost, and afterwards the control power is recovered, the closing spring is discharged or charged in the same manner as described above.
When the auto-charge/discharge action is in progress, mechanical noises will be heard. The noises however do not mean a failure.

Control circuit diagram (T2MC, XMD series)

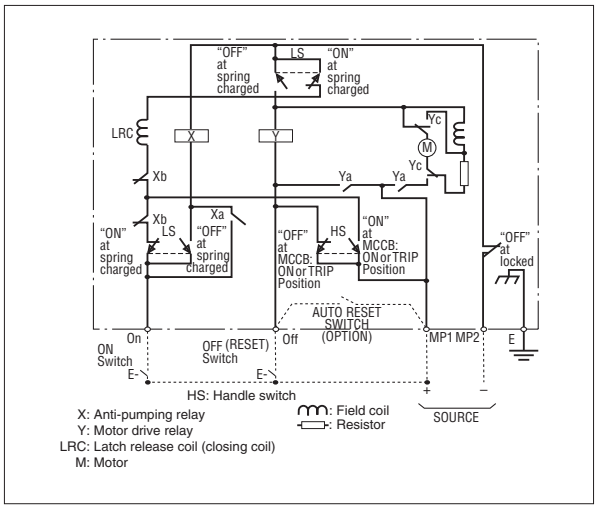

Operation Precautions

- Ensure that the actual operation voltage ranges from 85% to 110% of the rated one.
- The currents shown are the maximum values at the maximum rated operational voltage.
- When conducting the dielectric withstand voltage test, apply voltage between the control terminal group and ground. Ensure that the test voltage does not exceed AC 1500 V (AC 500 V if the rated operation voltage is DC 24 V).
- If the breaker is equipped with the UVT device, ensure that the UVT device is reset before providing a closing signal to the breaker.
- It takes up to three seconds to complete motorized OFF operation. If the breaker requires to be immediately opened from a remote location in an emergency, add the SHT or UVT device to the breaker for remote electrical tripping.
- When a thermal-magnetic breaker is tripped by the thermal OCR, wait for a few minutes; then reset the breaker.
- Make sure that the current and switching capacities of the operation switch are appropriate for the application.
- Avoid repeated and continuous applications of the operation power supply to the motor operator.
- Use noise filters if the control power supply of the motor operator is shared by peripheral devices. Otherwise, power supply noise may cause malfunction of the peripheral devices.
- Be sure to apply power to control power terminal MP1. If the breaker is turned ON or OFF manually without power applied to MP1, the auto charge/discharge feature is disabled, and thus the motor operator will not be activated next time. In such a case, applying the rated operation voltage between control power terminals MP1 and MP2 will enable the auto charge/discharge feature.
- The control power lost at the breaker charge process, and afterwards the control power is recovered, the closing spring is no more charged. Unusually the breaker reopen a charge depending on the handle position of the breaker.

5. External operating handles

5-1. Breaker-mounted (field installable small type) (HB)

The external operating handle is a tool that allows the breaker installed in a switchboard to be operated from outside and complies with IEC 60204-1.
The breaker-mounted type external operating handle is designed to be mounted directly to the breaker body.

■ Outer view

Types
T2HB16L
T2HB25L

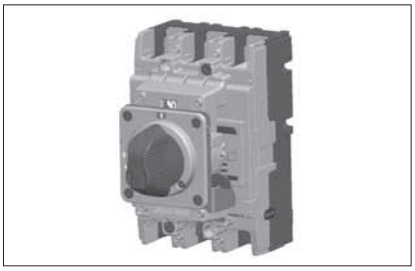

■ Mounting instructions

The external operating handle has not been mounted on the breakers.
For details on how to mount the handle, see the Operating Instructions packaged with the product.

[1] Mounting of external operating handle assembly

- Make sure that the breaker is in the OFF position.
- Put the external operating handle assembly onto the breaker in place so that the breaker handle is engaged with the handle catch of the assembly.
  Rotate two knobs to secure the handle assembly.

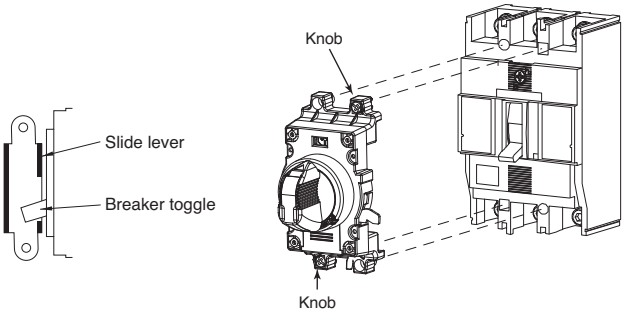

[2] Installation of handle escutcheon and latch plate

- Drill holes in the panel according to the panel cutout dimensions.
  Sandwich the panel between the handle escutcheon and latch plate and temporarily tighten using the supplied screws.
- Close the panel.
  Make adjustment so that the gap between the handle assembly and handle escutcheon is even and the assembly is not inclined against the breaker.

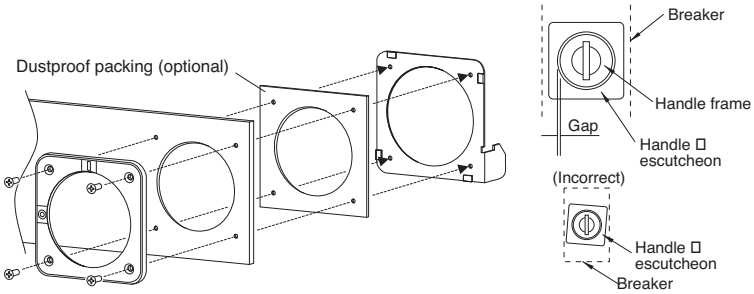

■ Breaker mounting direction

The ON and OFF positions of the handle and the positions of drilled holes in the panel do not need to be changed depending on the breaker mounting direction. The upper power supply type is standard. If a non-standard type is required, state the type when ordering.

R : Right power supply type	U: Upper power supply type (standard)	L: Left power supply type
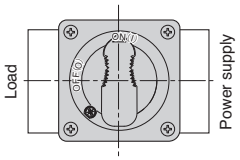	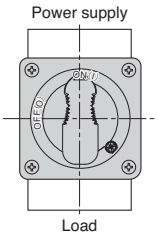	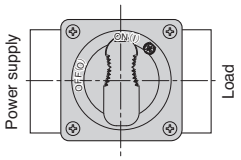

- For a change in mounting direction, see the Operating Instructions packaged with the product.

■ Panel lock mechanism

The external operating handle keeps the panel door locked when in the 'ON' position. There are two types, RESET Open and OFF Open.

(1) Reset Open (Standard type)
The handle is turned to the RESET OPEN position to open the panel door.

(2) OFF Open
The handle is turned to the OFF position to open the panel door.

- Panel lock release knob
  The release knob enables the panel door to be opened with the handle in the 'ON' position. To release: turn the release knob in the direction of anti-clockwise with a flat-bladed screwdriver.

- Safety interlock (Standard)
  The safety interlock prevents the breaker from turning ON as long as the panel is open. This interlock can be released using the hook lever.

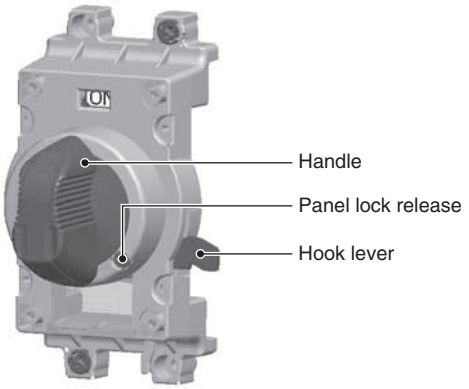

■ Toggle lock mechanism

- Padlock (Standard)
  This mechanism allows the breaker to be padlocked in the ON or OFF position.
  Padlocks are not supplied.
  Up to three padlocks can be installed.

Padlock dimensions (mm)

Type of handle	A	Dia.
T2HB	13 min	ø5.5-8

※ : Padlocking in OFF position only required by IEC 60204-1 is also available.
Please specify when ordering.

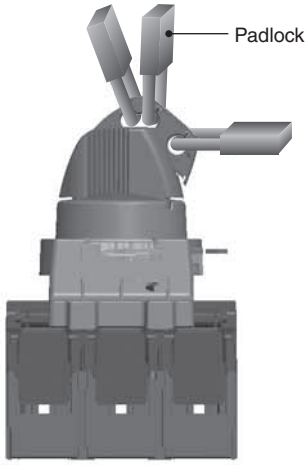

■ Protection degree (IEC 60529)

IP30	standard specification
IP50	optional, with a dust proof packing
IP55	special specification ①

Notes ① : For the depth of switchboard, take account of thickness of the packing.
See the Operating Instructions packaged with the product.

■ To be stated when ordering

Order code T2HB16L U R 3 B T

Type of external operating handle	Breaker mounting direction	Panel lock	Protection degree	Colour	Padlock
T2HB16L T2HB25L	U: Upper power supply type ✻ R: Right power supply type L: Left power supply type	R : RESET open ✻ F : OFF open	3 : IP30 ✻ 5 : IP50 S : IP55 (special spec.)	B : Black handle (Light gray base) ✻ R : Red handle (Yellow base)	T : Lock in ON or OFF✻ N : Lock in OFF

✻: standard specification

5. External operating handles

■ Outline dimensions

T2HB16L

Applicable breaker types
S50-SF, S125-SF, S125-SN

HL : Handle Frame Centre Line
℄ : Handle Centre Line

● Outline dimensions

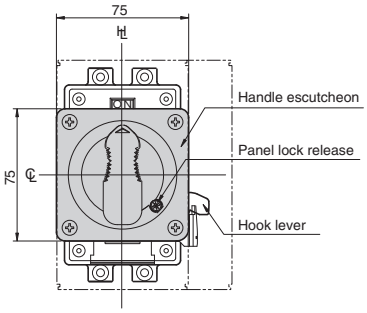

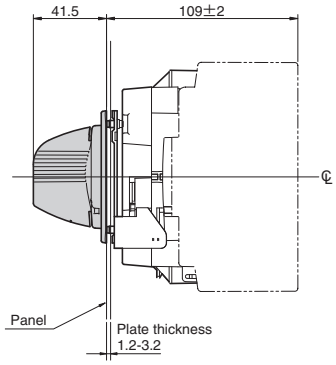

● Panel cutout dimensions

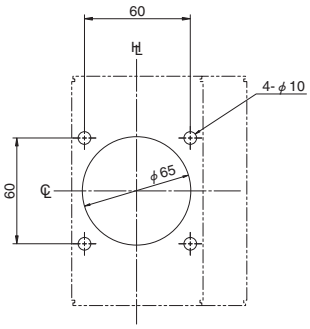

• Positions of the hinge and handle as seen from the load side of the breaker. Ensure that the hinge is positioned in the area.

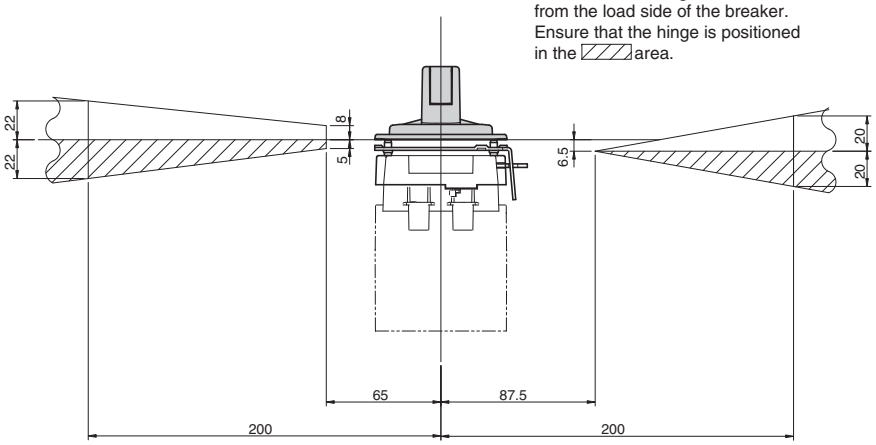

■ Outline dimensions

T2HB25L

Applicable breaker types
E250-SF, S250-SF, S250-SN

Ⅱ: Handle Frame Centre Line
℄: Handle Centre Line

● Outline dimensions

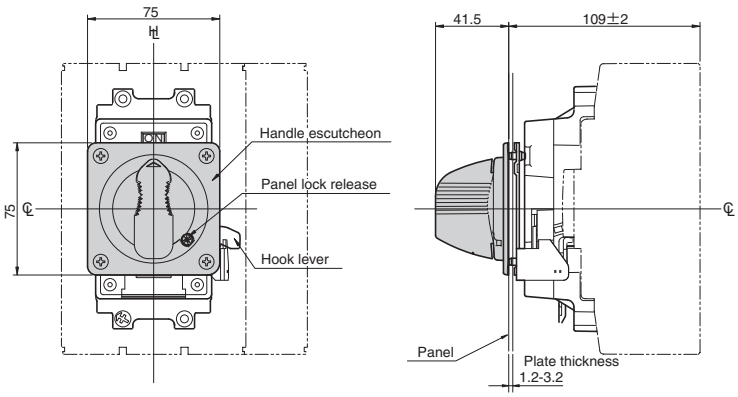

● Panel cutout dimensions

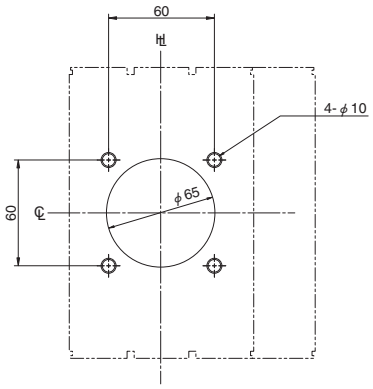

• Positions of the hinge and handle as seen from the load side of the breaker. Ensure that the hinge is positioned in the ▨ area.

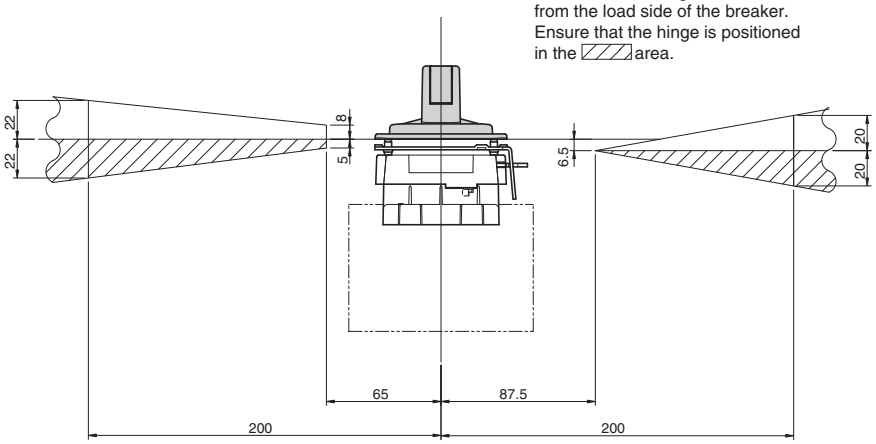

5. External operating handles

5-2. Breaker-mounted (field installable standard type) (HB)

The external operating handle is a tool that allows the breaker installed in a switchboard to be operated from outside and complies with IEC 60204-1.
The breaker-mounted type external operating handle is designed to be mounted directly to the breaker body.

■ Outer view

Types
T2HB12
T2HB25
T2HB40
T2HB80

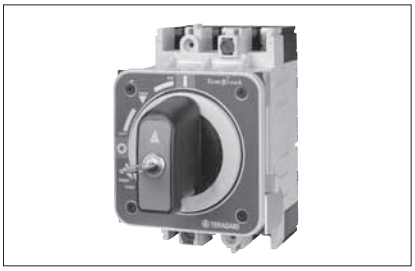

■ Mounting instructions

The external operating handle has not been mounted on the breakers.
For details on how to mount the handle, see the Operating Instructions packaged with the product.

[1] Mounting of external operating handle assembly

- Make sure that the breaker is in the OFF position.
- Put the external operating handle assembly onto the breaker in place so that the breaker handle is engaged with the handle catch of the assembly.
  Rotate two knobs to secure the handle assembly.
- For T2HB40 and T2HB80, tighten the bolts to secure the handle assembly.

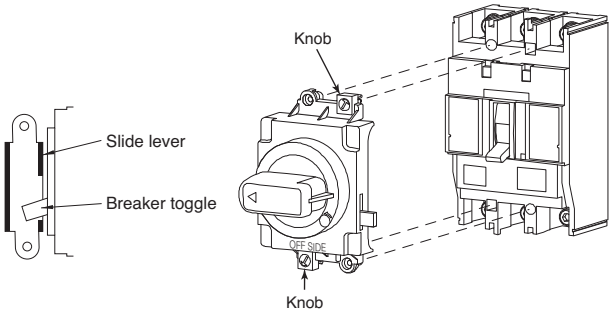

[2] Installation of handle escutcheon and latch plate

- Drill holes in the panel according to the panel cutoton dimensions.
  Sandwich the panel between the handle escutcheon and latch plate and temporarily tighten using the supplied screws.
- Close the panel.
  Make adjustment so that the gap between the handle assembly and handle escutcheon is even and the assembly is not inclined against the breaker.

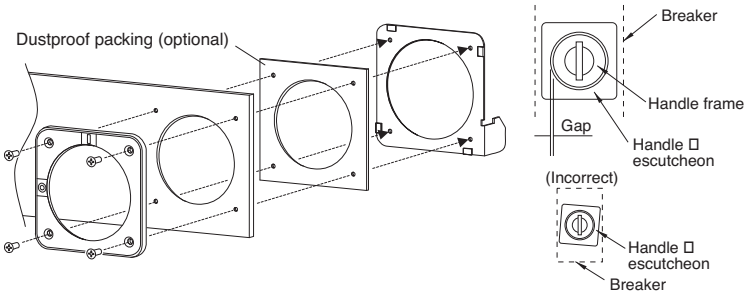

■ Breaker mounting direction

The ON and OFF positions of the handle and the positions of drilled holes in the panel do not need to be changed depending on the breaker mounting direction. The upper power supply type is standard. If a non-standard type is required, state the type when ordering.

R : Right power supply type	U: Upper power supply type (standard)	L: Left power supply type
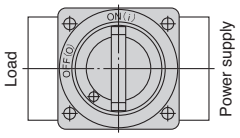	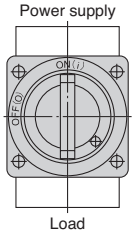	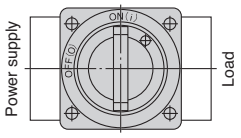

- For a change in mounting direction, see the Operating Instructions packaged with the product.

■ Panel lock mechanism

The external operating handle keeps the panel door locked when in the 'ON' position. There are two types, RESET Open and OFF Open.

(1) Reset Open (Standard type)
The handle is turned to the RESET OPEN position to open the panel door.

(2) OFF Open
The handle is turned to the OFF position to open the panel door.

- Panel lock release knob
  The release knob enables the panel door to be opened with the handle in the 'ON' position. To release: turn the release knob in the direction of anti-clockwise with a flat-bladed screwdriver.

- Safety interlock (Standard)
  The safety interlock prevents the breaker from turning ON as long as the panel is open. This interlock can be released using the hook lever.

■ Toggle lock mechanism

- Padlock (Standard)
  This mechanism allows the breaker to be padlocked in the ON or OFF position.
  Padlocks are not supplied.
  Up to three padlocks can be installed.

Padlock dimensions (mm)

Type of handle	A	Dia.
T2HB	13 min	ø5.5-8

- Key lock (Optional)
  Key locking is possible in the ON or OFF position.

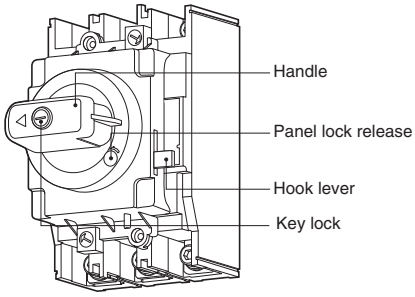

※ : Padlocking in OFF position only required by IEC 60204-1 is also available.
Please specify when ordering.

■ Protection degree (IEC 60529)

IP30	standard specification
IP50	optional, with a dust proof packing
IP55	special specification ①

Notes ① : For the depth of switchboard, take account of thickness of the packing.
See the Operating Instructions packaged with the product.

■ To be stated when ordering

Order code T2HB12 U R 3 B T

Type of external operating handle	Breaker mounting direction	Panel lock	Protection degree	Colour	Key lock / Padlock
T2HB12 T2HB25 T2HB40 T2HB80	U: Upper power supply type ✻ R: Right power supply type L: Left power supply type	R : RESET open ✻ F : OFF open	3 : IP30 ✻ 5 : IP50 S : IP55 (special spec.)	B : Black handle (Light gray base) ✻ R : Red handle (Yellow base)	T : with padlock (Lock in ON or OFF) ✻ W : with key lock and padlock (Lock in ON or OFF) N : with padlock (lock in OFF) K : with key lock and padlock (lock in OFF)

✻: standard specification

■ Outline dimensions

ASL: Arrangement Standard Line
HL: Handle Frame Centre Line
℄: Handle Centre Line

T2HB12

Applicable breaker types
S50-GF, S100-NF, S125-NF, S100-GF, S125-GF, S100-NM, S100-NN, S125-NN

● Outline dimensions

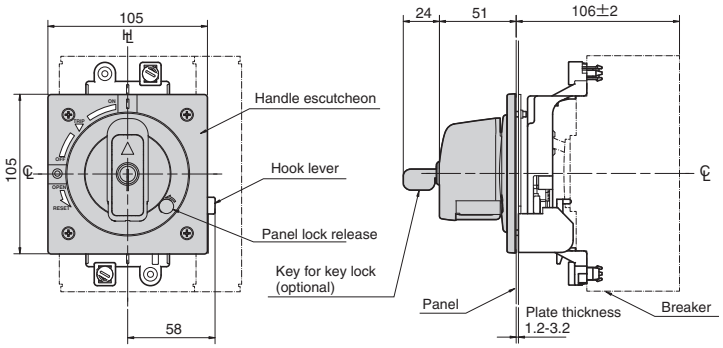

● Panel cutout dimensions

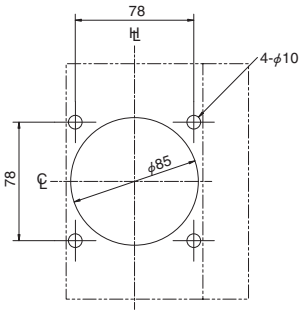

• Positions of the hinge and handle as seen from the load side of the breaker. Ensure that the hinge is positioned in the area.

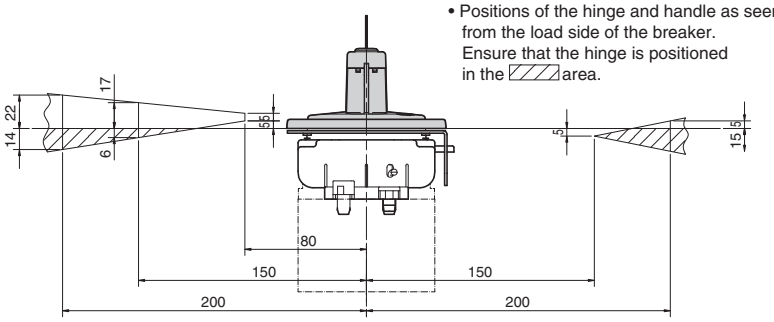

T2HB25

Applicable breaker types	A (mm)
S225-NF, S250-NF, S225-GF, S250-GF, S225-NM	106±2
S225-GE, H100, L100, H125, L125, H225, L225	141±2

● Outline dimensions

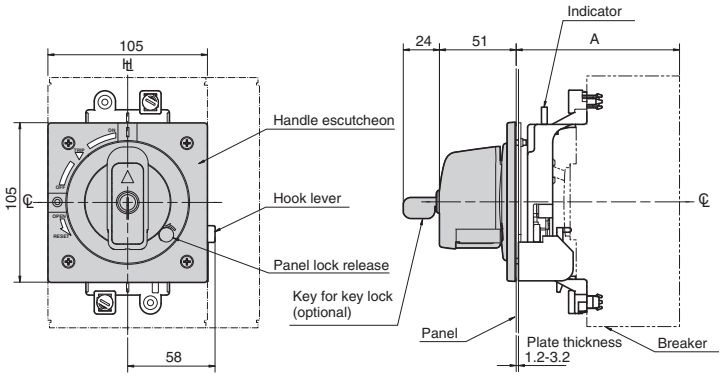

● Panel cutout dimensions

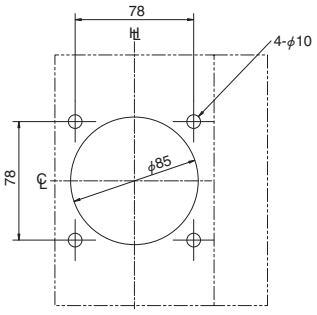

• Positions of the hinge and handle as seen from the load side of the breaker. Ensure that the hinge is positioned in the area.

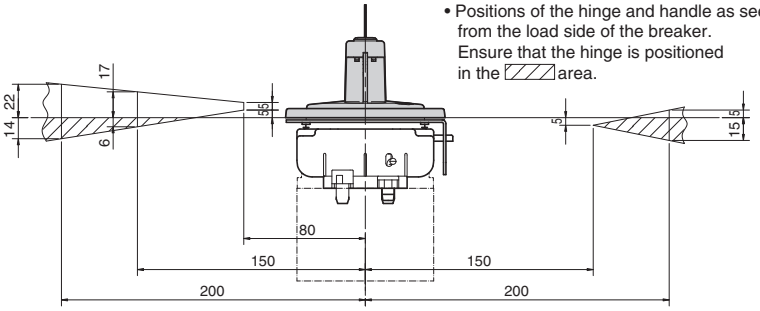

■ Outline dimensions

ASL: Arrangement Standard Line
⊞: Handle Frame Centre Line
℄: Handle Centre Line

T2HB40

Applicable breaker types	A (mm)	B (mm)
S400	150±2	97
H400, L400	187±2	134

● Outline dimensions

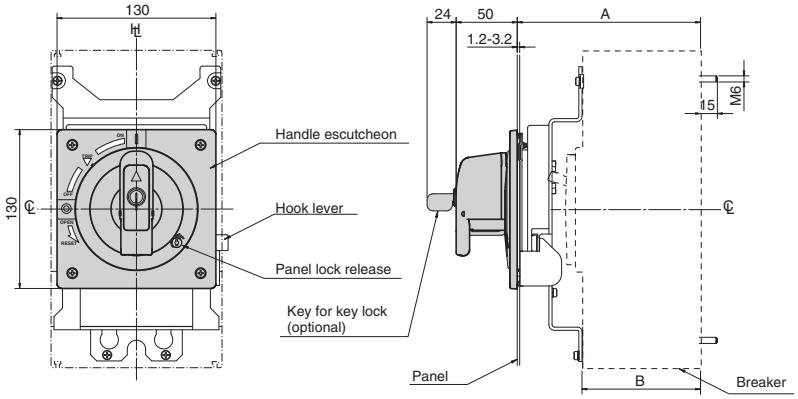

● Panel cutout dimensions

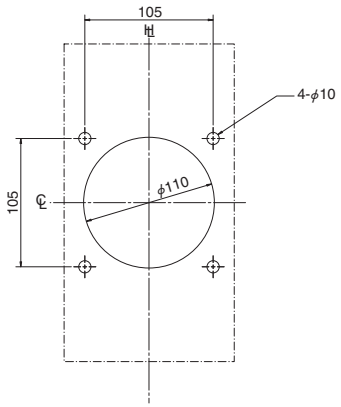

• Positions of the hinge and handle as seen from the load side of the breaker. Ensure that the hinge is positioned in the area.

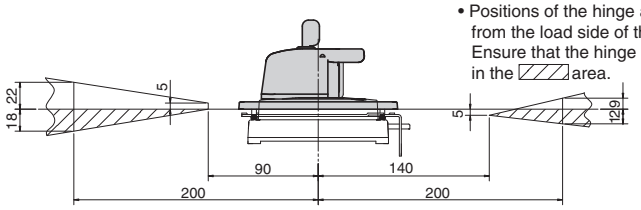

T2HB80

Applicable breaker types	A (mm)
S630, S800	150±2
H630, L630, H800, L800	187±2

● Outline dimensions

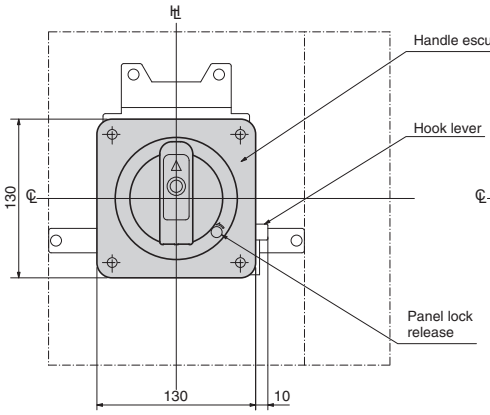

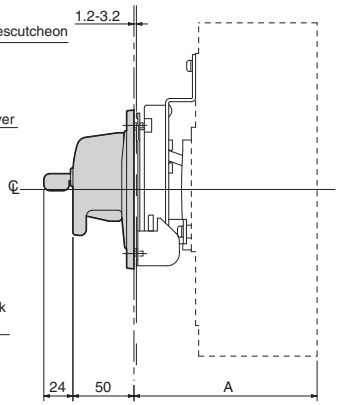

● Panel cutout dimensions

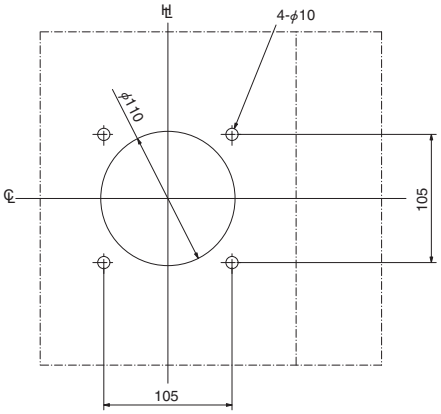

• Positions of the hinge and handle as seen from the load side of the breaker. Ensure that the hinge is positioned in the area.

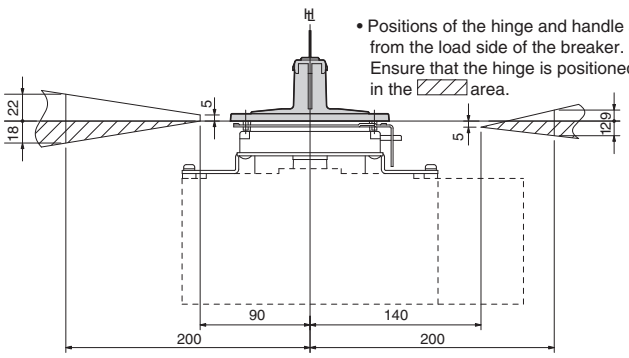

5. External operating handles

5-3. Breaker-mounted (HB)

The external operating handle is a tool that allows the breaker installed in a switchboard to be operated from outside.
The breaker-mounted type external operating handle is designed to be mounted directly to the breaker body.

■ Outer view

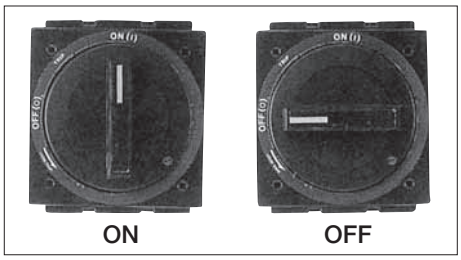

■ Mounting instructions

The external operating handle has not been mounted on the breakers.
For details on how to mount the handle, see the Operating Instructions packaged with the product.

[1] Mounting of external operating handle assembly

1.1 Secured to backing plate (TFJ21B / TFJ21XH)

- Make sure that the breaker is in the OFF position.
- Put the external operating handle assembly onto the breaker in place so that the breaker toggle is engaged with the slide lever of the assembly. Secure the assembly together with the breaker to the backing plate.

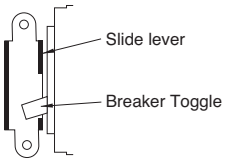

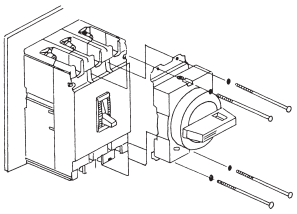

1.2 Secured to breaker cover (TFJ38X / T2HBX6)

- Make sure that the breaker is in the OFF position.
- Remove the four breaker cover mounting screws at the positions where the external operating handle assembly is secured.
- Put the handle assembly onto the breaker in place so that the breaker toggle is engaged with the slide lever of the assembly. Use the supplied mounting screws to secure the assembly to the breaker.

[2] Installation of handle escutcheon and latch plate

- Drill holes in the panel according to the panel cutout dimensions. Sandwich the panel between the handle escutcheon and latch plate and temporarily tighten using the supplied screws.
- Close the panel.
  Make adjustment so that the gap between the handle assembly and handle escutcheon is even and the assembly is not inclined against the breaker.

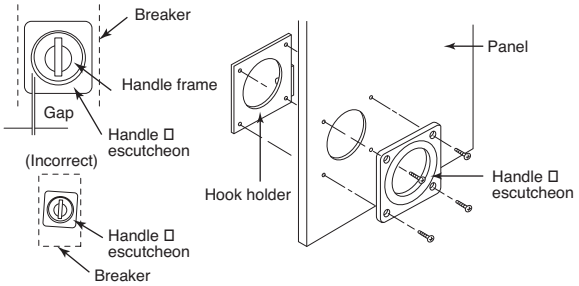

■ Breaker mounting direction

The ON and OFF positions of the handle and the positions of drilled holes in the panel do not need to be changed depending on the breaker mounting direction. The upper power supply type is standard. If a non-standard type is required, state the type when ordering.

R : Right power supply type	U: Upper power supply type (standard)	L: Left power supply type
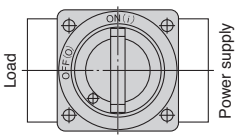	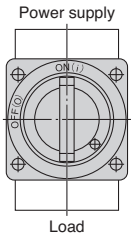	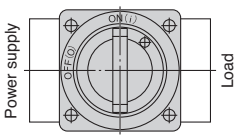

- For a change in mounting direction, see the Operating Instructions packaged with the product.

■ Panel lock mechanism

The external operating handle keeps the panel door locked when in the 'ON' position. There are two types, RESET Open and OFF Open.

(1) Reset Open (Standard type)
The handle is turned to the RESET OPEN position to open the panel door.

(2) OFF Open
The handle is turned to the OFF position to open the panel door.

- Panel lock release knob
  The release knob enables the panel door to be opened with the handle in the 'ON' position. To release: turn the release knob in the direction of anti-clockwise with a flat-bladed screwdriver.

- Safety interlock (Standard)
  The safety interlock prevents the breaker from turning ON as long as the panel is open. This interlock can be released using the hook lever.

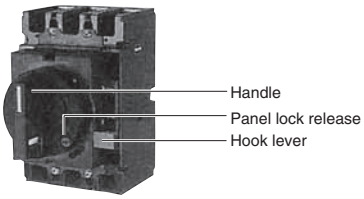

■ Toggle lock mechanism

- Padlock (Standard)
  This mechanism allows the breaker to be padlocked in the ON or OFF position.
  Padlocks are not supplied.
  Up to three padlocks can be installed.

Padlock dimensions (mm)

Type of handle	A	Dia.
TFJ21B TFJ21XH TFJ21BP	13 min	ø3.5-6
TFJ38X T2HBX6	19 min	

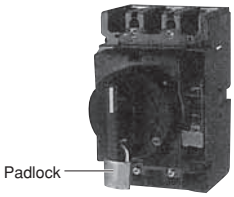

■ Protection degree (IEC 60529)

IP30	standard specification
IP50	optional, with a dust proof packing
IP55	special specification

Dustproof packing for IP50 (oprional) mm

Type of handle	Type of dustproof packing	A	B	C
TFJ21B TFJ21XH	Dustproof packing /2	93	73	7
TFJ38X T2HBX6	Dustproof packing /3	145	117	7

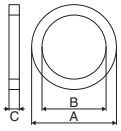

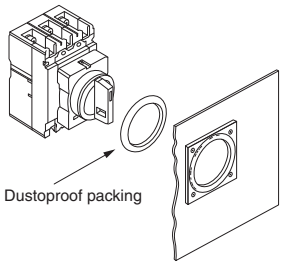

■ To be stated when ordering

Order code TFJ21B U R 3 B

Type of external operating handle	Breaker mounting direction	Panel lock	Protection degree	Colour
TFJ21B TFJ21XH TFJ38X T2HBX6	U: Upper power supply type ✻ R: Right power supply type L: Left power supply type	R : RESET open ✻ F : OFF open	3 : IP30 ✻ 5 : IP50 55 : IP55 (special spec.)	B : Black handle (Black base) ✻ R : Red handle (Yellow base)

✻: standard specification

■ Outline dimensions

ASL: Arrangement Standard Line
HL: Handle Frame Centre Line
℄: Handle Centre Line

TFJ21B

Applicable breaker types	Mounting screw
E50-SF, E50-CM	M4×72 2 pcs

TFJ21XH

Applicable breaker types	Mounting screw
E100-SF	M4×75 2 pcs

● Outline dimensions

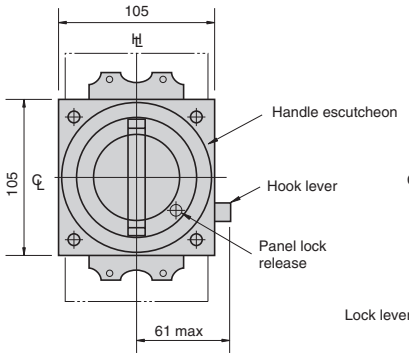

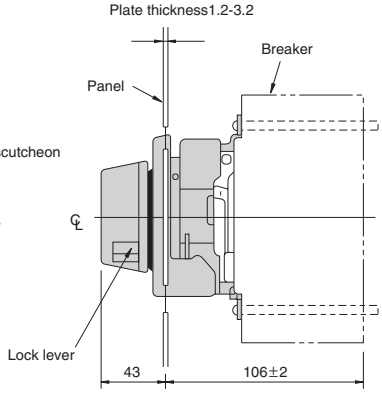

● Panel cutout dimensions

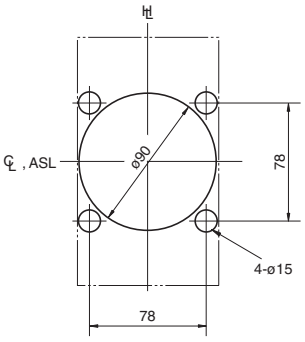

● Relative positions of the hinge and handle as seen from the load side of the breaker

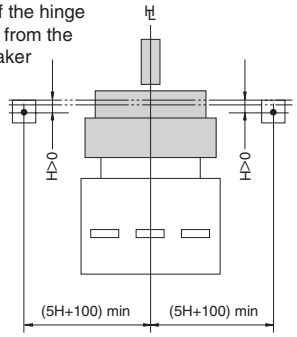

■ Outline dimensions

ASL: Arrangement Standard Line
⊞: Handle Frame Centre Line
℄: Handle Centre Line

TFJ38X

Applicable breaker types	Mounting screw ✻
TL-1000NE, TL-1200NE	M6×110 4 pcs

✻ Secured to breaker cover.

● Outline dimensions

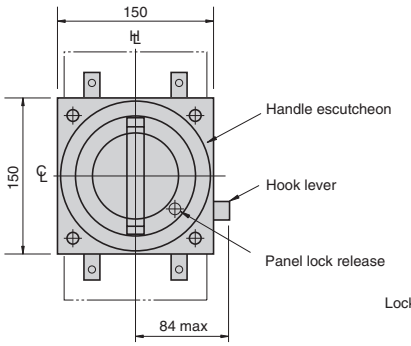

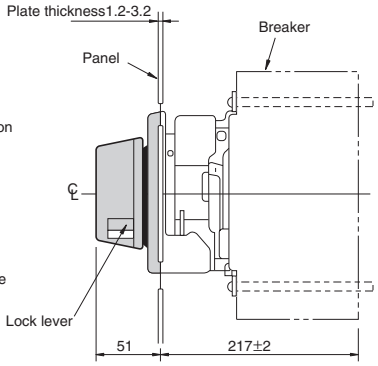

● Panel cutout dimensions

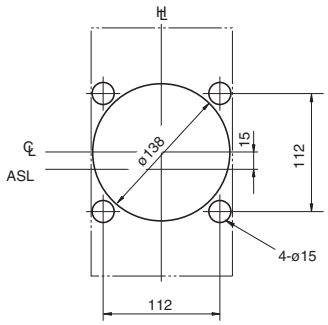

● Relative positions of the hinge and handle as seen from the load side of the breaker

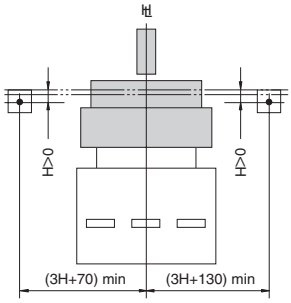

Toggle extension for TFJ38X (optional)

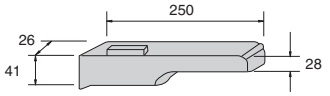

Order code
THC5

T2HBX6

Applicable breaker types	A (mm)	Mounting screw ✻
S1250	197±2	M6×110 4 pcs
S1600	217±2	

✻ Secured to breaker cover.

● Outline dimensions

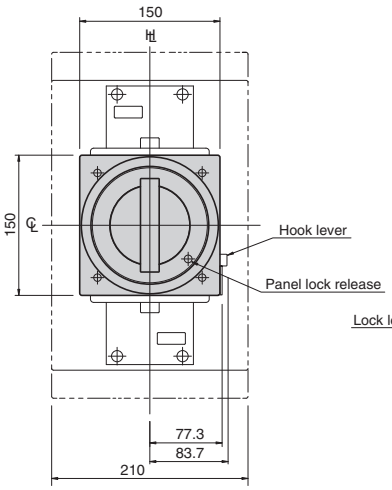

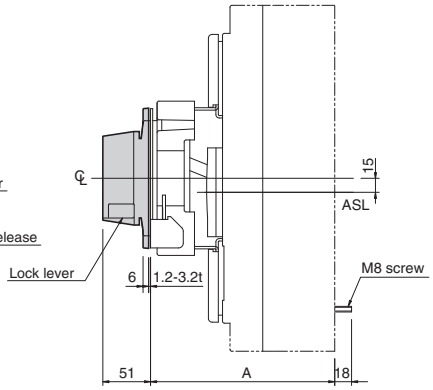

● Panel cutout dimensions

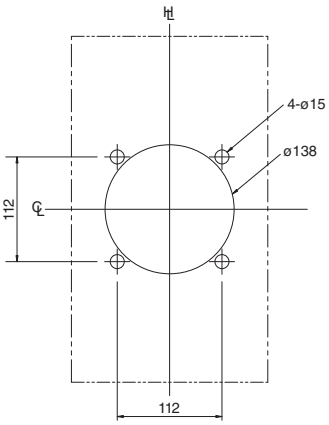

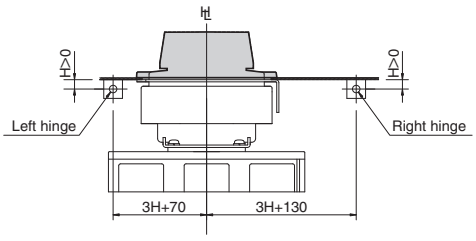

Toggle extension for T2HBX6 (optional)

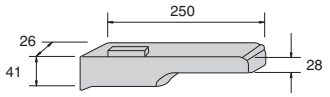

Order Code
T2HAX6

5. External operating handles

5-4. Door-mounted (depth adjustable) (HP)

Door-mounted type external operating handles allow breakers installed in control centers or switchboards to be manually operated from outside and complies with IEC 60204-1.
This handle assembly consists of an operation mechanism section which is to be installed in the breaker body, a handle section which is to be installed in a panel and a square shaft which couples both the sections.

■ Outer view

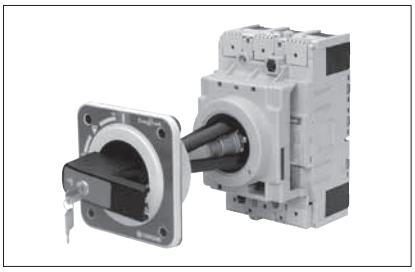

■ Operation direction of handles

Rotate the operating handle clockwise to turn the breaker on.

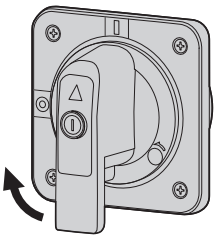

Rotate clockwise
to turn the breaker ON

■ Breaker mounting direction

The ON and OFF positions of the handle and the positions of drilled holes in the panel do not need to be changed depending on the breaker mounting direction.

Horizontal mounting / ON to move the breaker handle right	Vertical mounting / ON to move the breaker handle up	Horizontal mounting / ON to move the breaker handle left
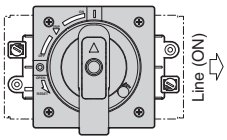	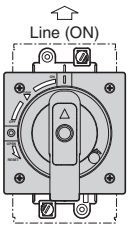	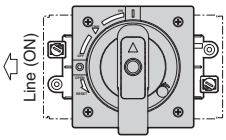

■ Panel lock mechanism

The external operating handle keeps the panel door locked when in the 'ON' position. There are two types, RESET Open and OFF Open.

(1) Reset Open (Standard type)
The handle is turned to the RESET OPEN position to open the panel door.

(2) OFF Open
The handle is turned to the OFF position to open the panel door.

- Panel lock release knob
  The release knob enables the panel door to be opened with the handle in the 'ON' position. To release: turn the release knob in the direction of anti-clockwise with a flat-bladed screwdriver.

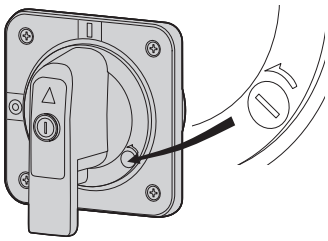

■ Toggle lock mechanism

- Padlock (Standard)
  This mechanism allows the breaker to be padlocked in the ON or OFF position.
  Padlocks are not supplied.
  Up to three padlocks can be installed.

Padlock dimensions (mm)

Type of handle	A	Dia.
T2HP	13 min	ø5.5-8

- Key lock (Optional)
  Key locking is possible in the ON or OFF position.

※ : Padlocking in OFF position only required by IEC 60204-1 is also available.
Please specify when ordering.

■ Protection degree (IEC 60529)

IP54	standard specification
IP65	special specification

■ Dimensions of square shafts available

There are the following shaft dimensions available. Select an appropriate shaft depending on the mounting position of the breaker. Cut the shaft to an appropriate length if required. Coat the cut end faces of the shaft with an anti-corrosion paint.

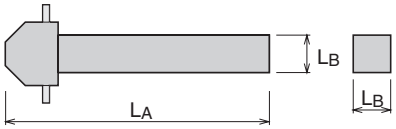

Shafts order codes	LA (mm)	LB (mm)
T2PS251	121	8
T2PS252	221	
T2PS253	321	
T2PS254	421	
T2PS401	147.5	14
T2PS402	247.5	
T2PS403	347.5	
T2PS404	447.5	

■ To be stated when ordering

Order code T2HP25 R 5 B T

Type of external operating handle	Panel lock	Protection degree	Colour	Key lock / Padlock
T1HP05 ① T2HP12 T1HP10X ① T2HP25 T1HPX6 ① T2HP40 T2HP16L T2HP80 T2HP25L T2HPX6	R : RESET open ✻ F : OFF open	5 : IP54 ✻ 6 : IP65	B : Black handle (Light gray base) ✻ R : Red handle (Yellow base)	T : with padlock (Lock in ON or OFF) ✻ W : with key lock and padlock (Lock in ON or OFF) N : with padlock (lock in OFF) K : with key lock and padlock (lock in OFF)

✻: standard specification ①: "Panel lock" is apply "RESET open" only.

5. External operating handles

HL : Handle Frame Centre Line
℄ : Handle Centre Line

■ Outline dimensions

T1HP05, T1HP10X

● Outline dimensions

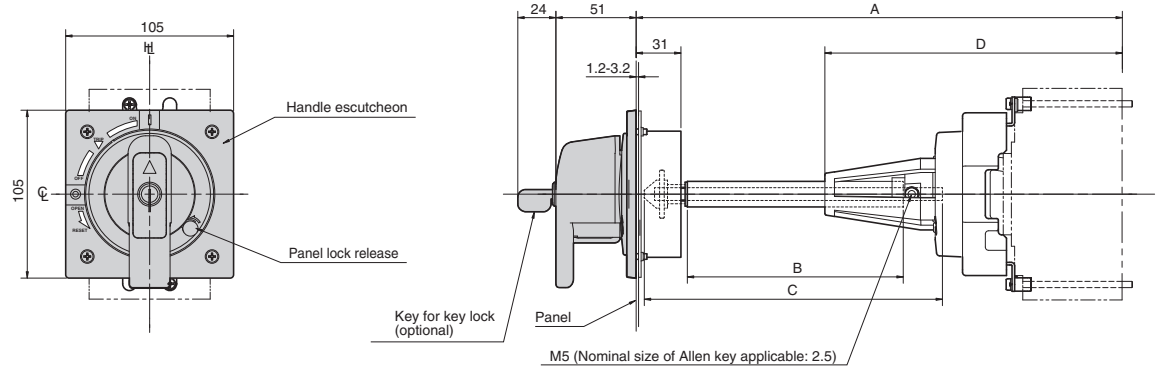

● Panel cutout dimensions

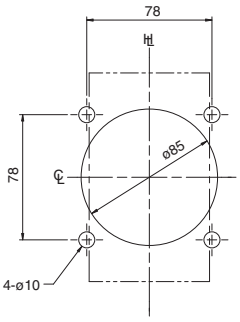

• Positions of the hinge and handle as seen from the load side of the breaker. Ensure that the hinge is positioned in the area.

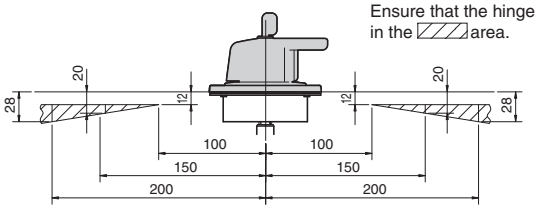

Applicable breaker types ②	A ①	B	C	D	Square shaft applicable	Shaft support
E50-SF, E50-CM (T1HP05) E100-SF (T1HP10X)	236min.	56	107	194	T2PS251	Yes
	250max.	70	121	194		Yes
	350max.	170	221	194	T2PS252	Yes
	450max.	270	321	194	T2PS253	Yes
	550max.	370	421	194	T2PS254	Yes

Notes:
①: "Min (minimum)" means the minimum possible distance from the panel surface to the breaker mounting surface, which can be formed by cutting the square shaft.
"Max (maximum)" means the maximum distance of the same section, which is formed with no cutting of the square shaft.
②: "Panel lock" is apply "RESET open" only.

A: Distance from the panel surface to the breaker mounting surface
B: Length of the tube used to cover the square shaft
C: Length of the square shaft used
D: Distance from the tip of the shaft support to the breaker mounting surface

℄: Handle Frame Centre Line
℄: Handle Centre Line

■ Outline dimensions

T2HP16L

● Outline dimensions

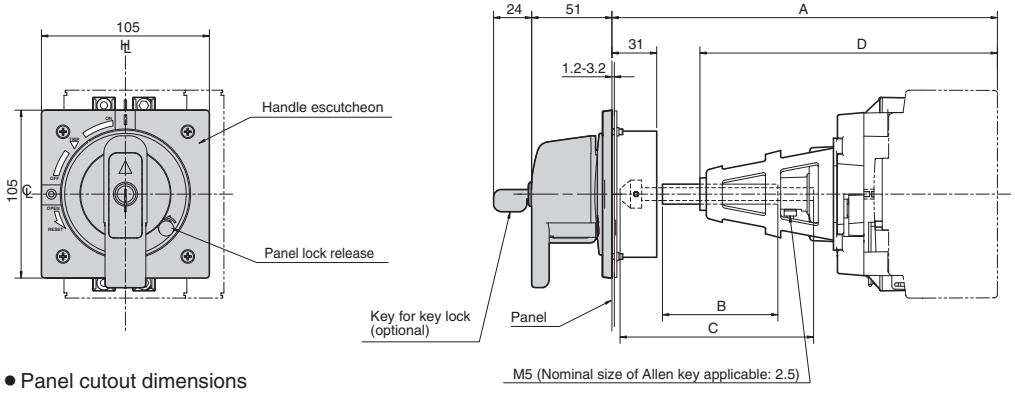

● Panel cutout dimensions

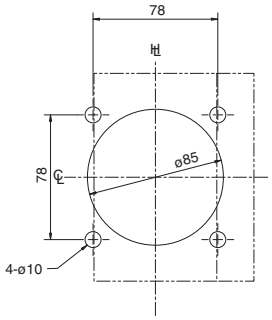

• Positions of the hinge and handle as seen from the load side of the breaker. Ensure that the hinge is positioned in the area.

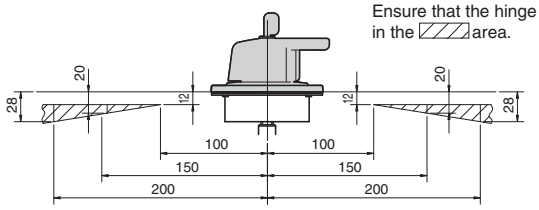

Applicable breaker types	A ①	B	C	D	Square shaft applicable	Shaft support
S50-SF, S125-SF, S125-SN	229 min.	56	107	186	T2PS251	Yes
	243 max.	70	121	186		Yes
	343 max.	170	221	186	T2PS252	Yes
	443 max.	270	321	186	T2PS253	Yes
	543 max.	370	421	186	T2PS254	

Note ①:
"Min (minimum)" means the minimum possible distance from the panel surface to the breaker mounting surface, which can be formed by cutting the square shaft.
"Max (maximum)" means the maximum distance of the same section, which is formed with no cutting of the square shaft.

A: Distance from the panel surface to the breaker mounting surface
B: Length of the tube used to cover the square shaft
C: Length of the square shaft used
D: Distance from the tip of the shaft support to the breaker mounting surface

5. External operating handles

HL : Handle Frame Centre Line
℄ : Handle Centre Line

■ Outline dimensions

T2HP25L

● Outline dimensions

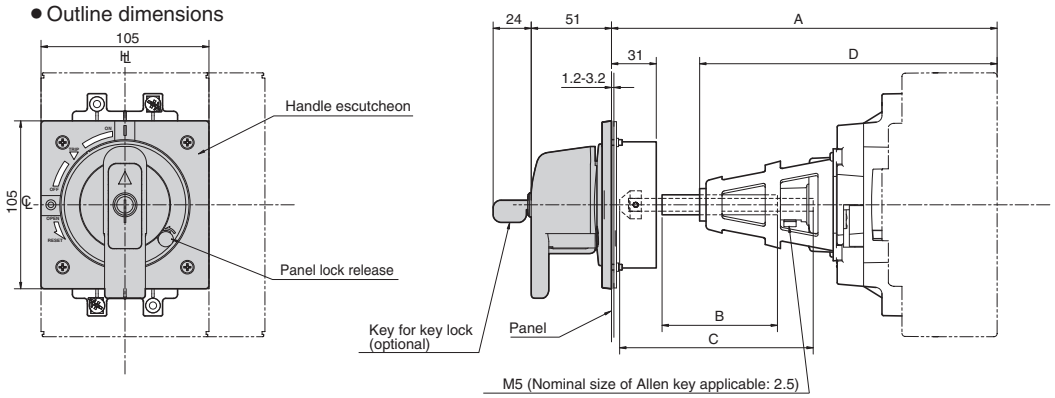

● Panel cutout dimensions

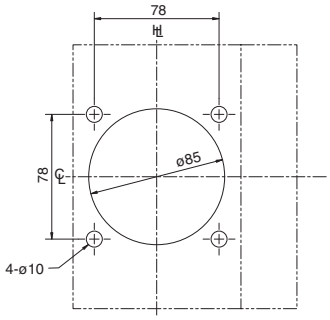

• Positions of the hinge and handle as seen from the load side of the breaker. Ensure that the hinge is positioned in the area.

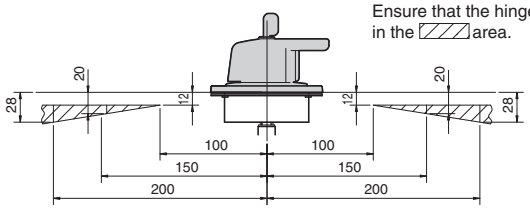

Applicable breaker types	A ①	B	C	D	Square shaft applicable	Shaft support
E250-SF, S250-SF, S250-SN	229 min.	56	107	186	T2PS251	Yes
	243 max.	70	121	186		Yes
	343 max.	170	221	186	T2PS252	Yes
	443 max.	270	321	186	T2PS253	Yes
	543 max.	370	421	186	T2PS254	

Note ①:
"Min (minimum)" means the minimum possible distance from the panel surface to the breaker mounting surface, which can be formed by cutting the square shaft.
"Max (maximum)" means the maximum distance of the same section, which is formed with no cutting of the square shaft.

A: Distance from the panel surface to the breaker mounting surface
B: Length of the tube used to cover the square shaft
C: Length of the square shaft used
D: Distance from the tip of the shaft support to the breaker mounting surface

ASL: Arrangement Standard Line
℄: Handle Frame Centre Line
℄: Handle Centre Line

■ Outline dimensions

T2HP12

● Outline dimensions

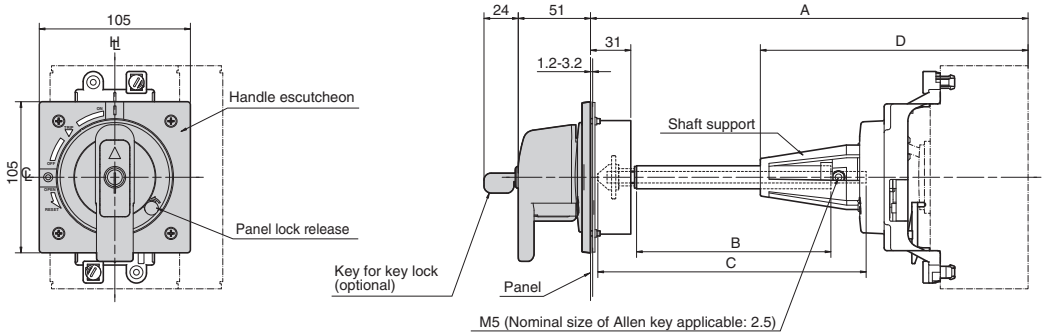

● Panel cutout dimensions

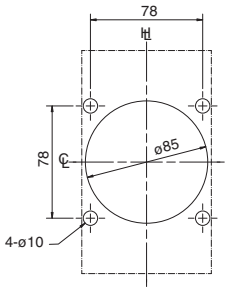

• Positions of the hinge and handle as seen from the load side of the breaker. Ensure that the hinge is positioned in the area.

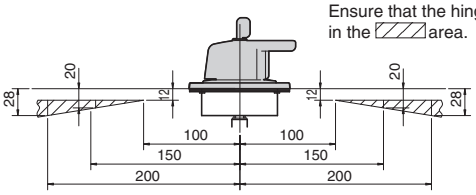

Applicable breaker types	A ①	B	C	D	Square shaft applicable	Shaft support
S50-GF, S100-NF, S125-NF, S100-GF, S125-GF, S100-NM, S100-NN, S125-NN	229 min.	56	107	186	T2PS251	Yes
	243 max.	70	121	186		
	343 max.	170	221	186	T2PS252	
	443 max.	270	321	186	T2PS253	
	543 max.	370	421	186	T2PS254	

Note ①:
"Min (minimum)" means the minimum possible distance from the panel surface to the breaker mounting surface, which can be formed by cutting the square shaft.
"Max (maximum)" means the maximum distance of the same section, which is formed with no cutting of the square shaft.

A: Distance from the panel surface to the breaker mounting surface
B: Length of the tube used to cover the square shaft
C: Length of the square shaft used
D: Distance from the tip of the shaft support to the breaker mounting surface

5. External operating handles

ASL: Arrangement Standard Line
HL: Handle Frame Centre Line
℄: Handle Centre Line

■ Outline dimensions

T2HP25

● Outline dimensions

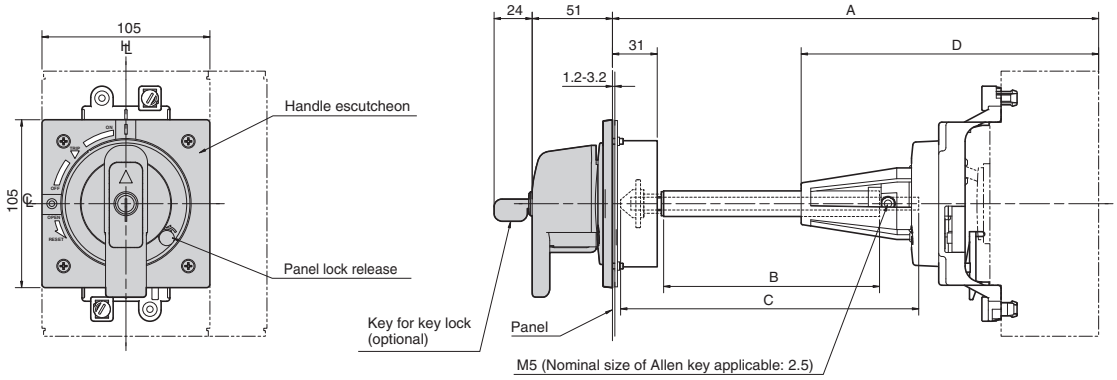

● Panel cutout dimensions

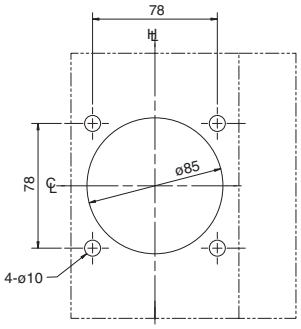

• Positions of the hinge and handle as seen from the load side of the breaker. Ensure that the hinge is positioned in the ▨ area.

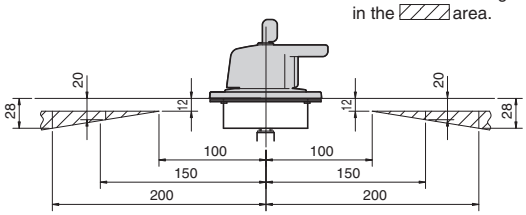

Applicable breaker types	A ①	B	C	D	Square shaft applicable	Shaft support
S225-NF, S250-NF, S225-GF, S250-GF, S225-NM	229 min.	56	107	186	T2PS251	Yes
	243 max.	70	121	186		
	343 max.	170	221	186	T2PS252	
	443 max.	270	321	186	T2PS253	
	543 max.	370	421	186	T2PS254	
S225-GE, H100, H125, H225, L100, L125, L225	264 min.	56	107	221	T2PS251	
	278 max.	70	121	221		
	378 max.	170	221	221	T2PS252	
	478 max.	270	321	221	T2PS253	
	578 max.	370	421	221	T2PS254	

Note ①:
"Min (minimum)" means the minimum possible distance from the panel surface to the breaker mounting surface, which can be formed by cutting the square shaft.
"Max (maximum)" means the maximum distance of the same section, which is formed with no cutting of the square shaft.

A: Distance from the panel surface to the breaker mounting surface
B: Length of the tube used to cover the square shaft
C: Length of the square shaft used
D: Distance from the tip of the shaft support to the breaker mounting surface

ASL: Arrangement Standard Line
℄: Handle Frame Centre Line
℄: Handle Centre Line

■ Outline dimensions

T2HP40

● Outline dimensions

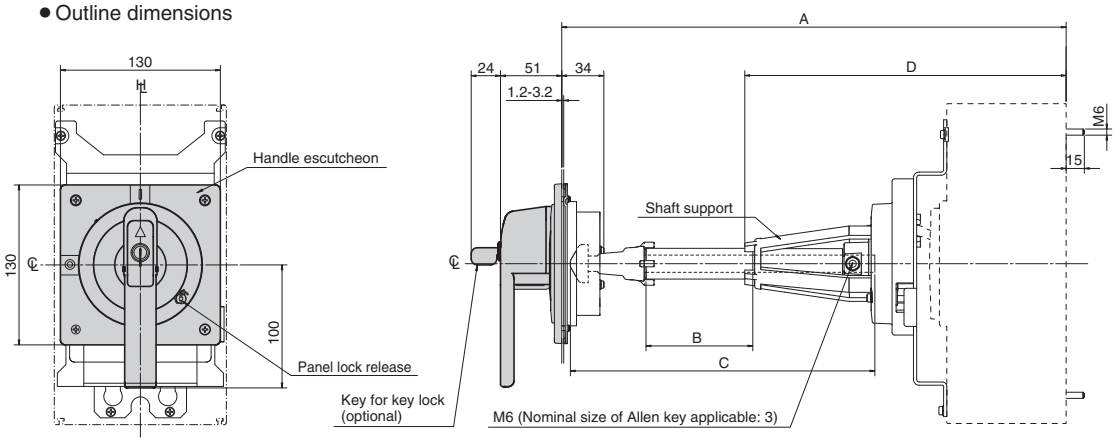

● Panel cutout dimensions

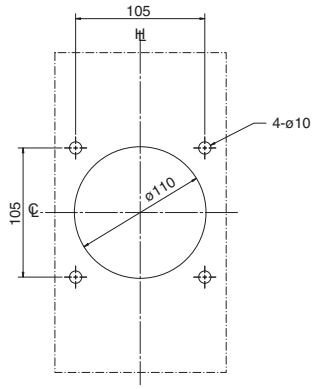

• Positions of the hinge and handle as seen from the load side of the breaker. Ensure that the hinge is positioned in the area.

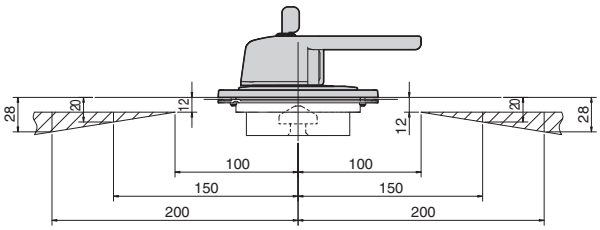

Applicable breaker types	A ①	B	C	D	Square shaft applicable	Shaft support
S400	270 min.	12	107.5	——	T2PS401	Non
	310 max.②	52	147.5	——		
	340 min.②	10	177.5	261	T2PS402	Yes
	410 max.	80	247.5	261		
	510 max.	180	347.5	261	T2PS403	
	610 max.	280	447.5	261	T2PS404	
H400, L400	307 min.	12	107.5	——	T2PS401	Non
	347 max.③	52	147.5	——		
	377 min.③	10	177.5	298	T2PS402	Yes
	447 max.	80	247.5	298		
	547 max.	180	347.5	298	T2PS403	
	647 max.	280	447.5	298	T2PS404	

Notes:
①. "Min (minimum)" means the minimum possible distance from the panel surface to the breaker mounting surface, which can be formed by cutting the square shaft. "Max (maximum)" means the maximum distance of the same section, which is formed with no cutting of the square shaft.
②. When dimension A is in a range of 310 mm to 340 mm, cut square shaft T2PS402 to an appropriate length and use the shaft without shaft support.
③. When dimension A is in a range of 347mm to 377mm, cut square shaft T2PS402 to an appropriate length and use the shaft without shaft support.

A: Distance from the panel surface to the breaker mounting surface
B: Length of the tube used to cover the square shaft
C: Length of the square shaft used
D: Distance from the tip of the shaft support to the breaker mounting surface

5. External operating handles

ASL: Arrangement Standard Line
HL: Handle Frame Centre Line
℄: Handle Centre Line

■ Outline dimensions

T2HP80

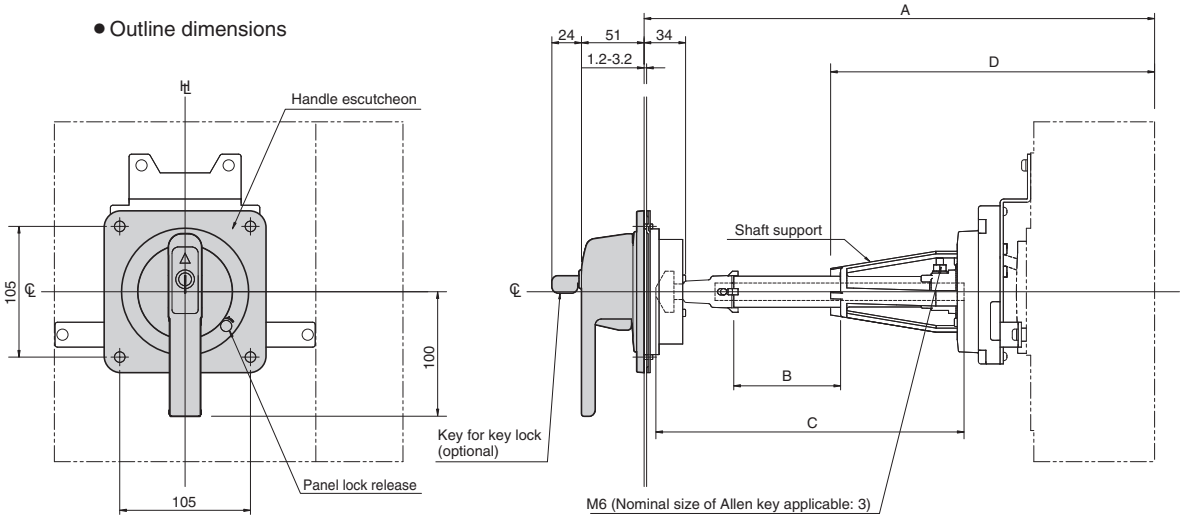

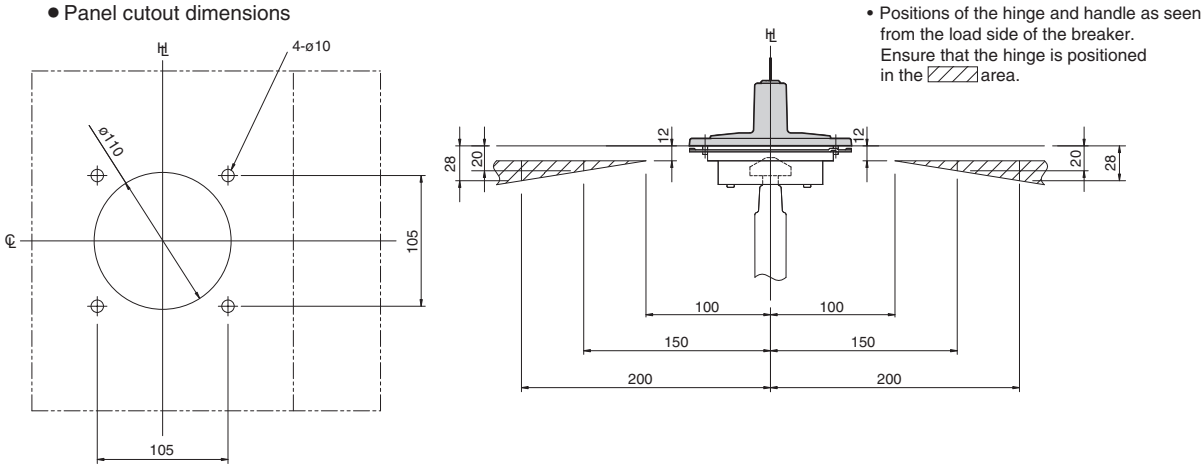

Applicable breaker types	A ①	B	C	D	Square shaft applicable	Shaft support
S630, S800	270 min.	12	107.5	——	T2PS401	Non
	310 max.②	52	147.5	——		
	340 min.②	10	177.5	261	T2PS402	Yes
	410 max.	80	247.5	261		
	510 max.	180	347.5	261	T2PS403	
	610 max.	280	447.5	261	T2PS404	
H630, L630, H800, L800	307 min.	12	107.5	——	T2PS401	Non
	347 max.③	52	147.5	——		
	377 min.③	10	177.5	298	T2PS402	Yes
	447 max.	80	247.5	298		
	547 max.	180	347.5	298	T2PS403	
	647 max.	280	447.5	298	T2PS404	

Notes:
①. "Min (minimum)" means the minimum possible distance from the panel surface to the breaker mounting surface, which can be formed by cutting the square shaft.
"Max (maximum)" means the maximum distance of the same section, which is formed with no cutting of the square shaft.
②. When dimension A is in a range of 310 mm to 340 mm, cut square shaft T2PS402 to an appropriate length and use the shaft without shaft support.
③. When dimension A is in a range of 347mm to 377mm, cut square shaft T2PS402 to an appropriate length and use the shaft without shaft support.

A: Distance from the panel surface to the breaker mounting surface
B: Length of the tube used to cover the square shaft
C: Length of the square shaft used
D: Distance from the tip of the shaft support to the breaker mounting surface

ASL: Arrangement Standard Line
℄: Handle Frame Centre Line
℄: Handle Centre Line

■ Outline dimensions

T1HPX6, T2HPX6

Type of external operating handle	Applicable breaker types
T2HPX6	**S1250** **S1600**
T1HPX6 ②	**TL-1000NE, TL-1200NE**

Note ②: "Panel lock" is apply "RESET open" only.

● Outline dimensions

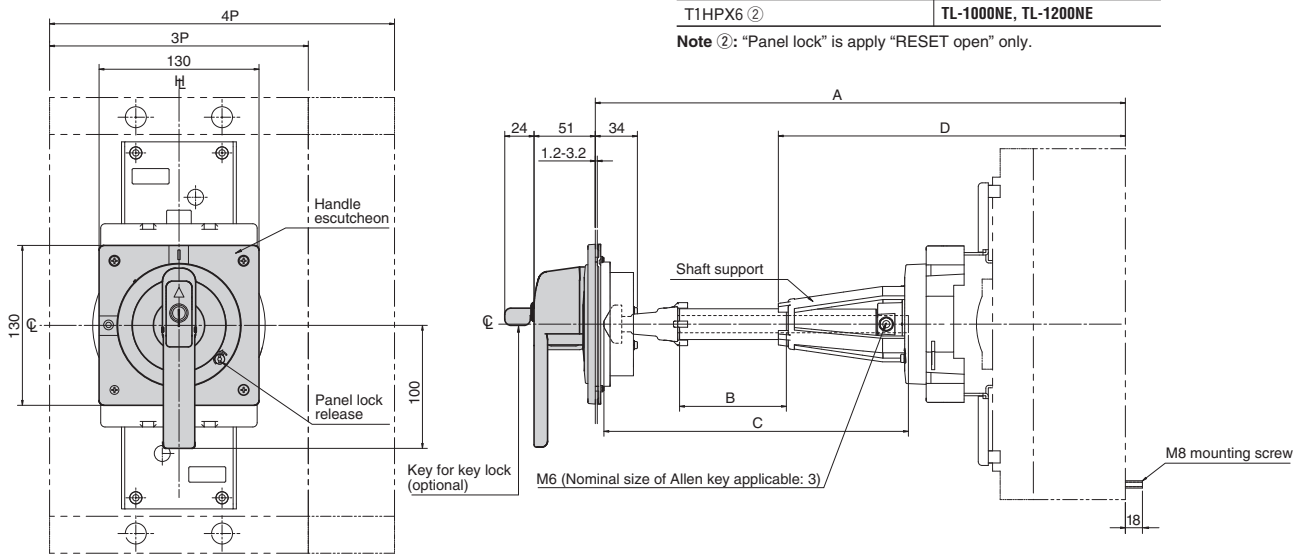

● Panel cutout dimensions

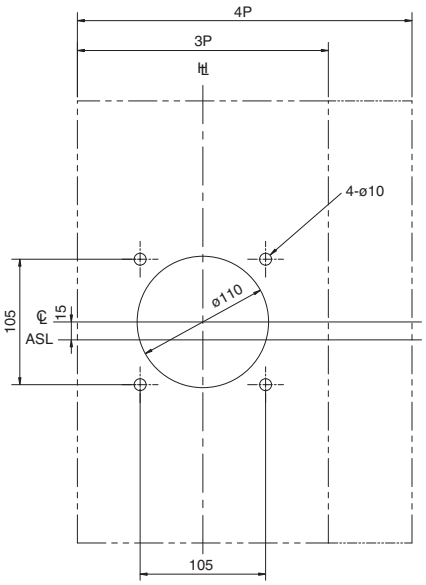

• Positions of the hinge and handle as seen from the load side of the breaker. Ensure that the hinge is positioned in the area.

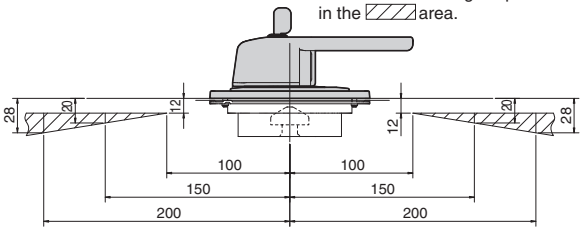

Applicable breaker types	A ①	B	C	D	Square shaft applicable	Shaft support
S1250	367min.	52	147.5	317	T2PS401	Non
	467max.	80	247.5	317	T2PS402	Yes
	567max.	180	347.5	317	T2PS403	
	667max.	280	447.5	317	T2PS404	
S1600, TL-1000NE, TL-1200NE	387min.	52	147.5	337	T2PS401	Non
	487max.	80	247.5	337	T2PS402	Yes
	587max.	180	347.5	337	T2PS403	
	687max.	280	447.5	337	T2PS404	

Note ①:
"Min (minimum)" means the minimum possible distance from the panel surface to the breaker mounting surface, which can be formed by cutting the square shaft.
"Max (maximum)" means the maximum distance of the same section, which is formed with no cutting of the square shaft.

A: Distance from the panel surface to the breaker mounting surface
B: Length of the tube used to cover the square shaft
C: Length of the square shaft used
D: Distance from the tip of the shaft support to the breaker mounting surface

5. External operating handles

5-5.Door-mounted (depth fixed) (HP)

Door-mounted type external operating handles allow breakers installed in control centers or switchboards to be manually operated from outside.

■ Outer view

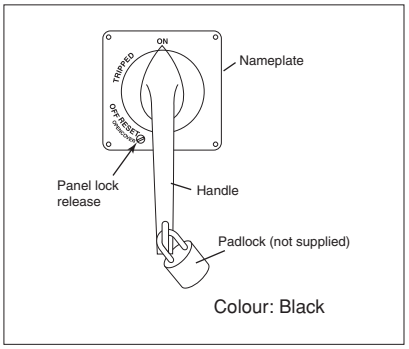

■ Operation mechanism

ON
Turn the handle clockwise to the ON position on the indication plate.

OFF
Turn the handle anti-clockwise to the OFF position on the indication plate.

RESET
When the breaker trips, the handle indicates tripped turn the handle anti-clockwise to the RESET position. This will reset the breaker.

OPENING THE PANEL
Turn the handle anti-clockwise to 'OPEN COVER'. The lock is released and the panel can be opened.

■ Panel lock mechanism

The external operating handle keeps the panel door locked when in the ON, OFF or TRIP position.
Hook holder shown in the outline dimension drawing should be provided.

- Panel lock release knob
  When the release knob is turned clockwise the panel door can be opened irrespective of the handle being in the ON, OFF or TRIP position.

■ Toggle lock mechanism

- Padlock (Standard)
  This mechanism allows the breaker to be padlocked in the ON or OFF position.
  Padlocks are not supplied.
  Up to three padlocks can be installed.

Padlock dimensions

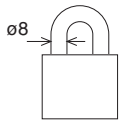

■ Outline dimensions

XFE10

Applicable breaker types
XS2000NE, XS2000NN

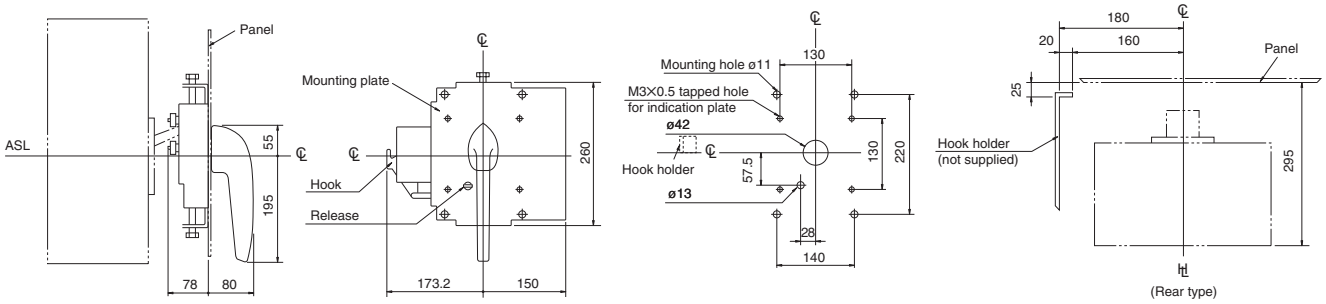

6. Interpole barriers (BA)

Interpole barriers serve to enhance electrical insulation between poles and prevent short-circuit due to electrically conductive foreign matter. Combined use of interpole barriers and terminal covers (standard type) is not possible.

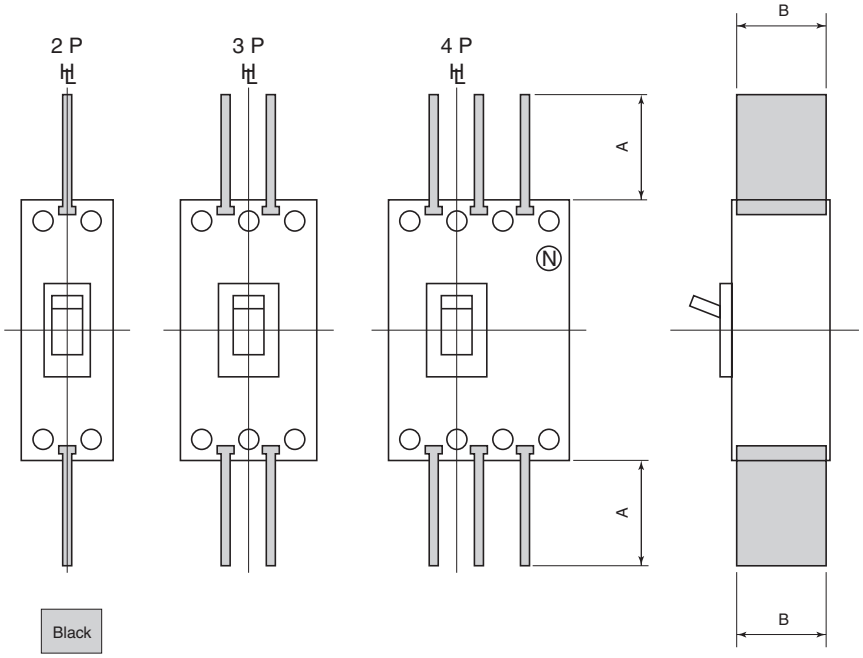

• Slide interpole barriers into the grooves located on the breaker.

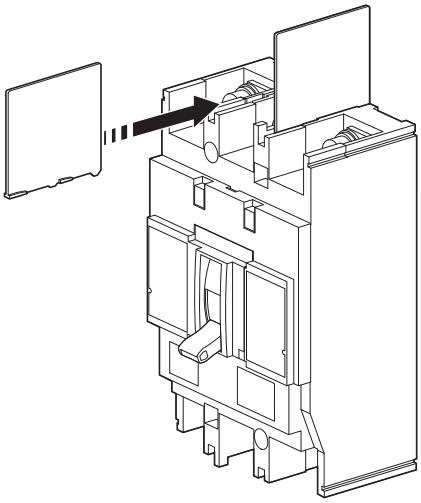

■ To be stated when ordering
Please state the type when ordering. ① One set contains two barriers. ② It is ordering by one.
Caution: Be sure to use the interpole barriers supplied with the breaker in order to prevent accidents.

Types and dimensions of interpole barriers, units in mm

Frame size	Types of breakers	Interpole barrier		A	B
		Type	Code		
50	**E50-SF,E50-CM,TB-5S,TB-5P,TB-5D**	②TQQ-2CC	—	36	50
	S50-SF	①T2BA16L3SH	—	50	55
	S50-GF	①T2BA123SH	T2BA12S	47	53
100	**E100-SF**	②TQQ-2CC	—	36	50
	S100-NF,S100-GF,S100-NM,S100-NN	①T2BA123SH	T2BA12S	47	53
	H100-NF,L100-NF	①T2BA253LH	T2BA25L	100	88
125	**S125-SF,S125-SN**	①T2BA16L3SH	—	50	55
	S125-NF,S125-GF	①T2BA123SH	T2BA12S	47	53
	H125-NF,L125-NF	①T2BA253LH	T2BA25L	100	88
225 250	**S225-NF,S225-GF,S225-NM**	①T2BA253SH	T2BA25S	100	53
	H225-NF,L225-NF,S225-GE	①T2BA253LH	T2BA25L	100	88
	E250-SF,S250-SF,S250-SN	①T2BA25L3SH	T2BA25LS	101	53
	S250-NF,S250-GF	①T2BA253SH	T2BA25S	100	53
400	**S400-CF,S400-NF,S400-GF,S400-NE,S400-GE** **S400-PF,S400-PE,S400-NN,H400-NE,L400-NE**	①T2BA403SH	TQQ-5BA	110	95
630	**S630-CF,S630-NF,S630-RF,S630-PF,S630-NE** **S630-RE,S630-PE,S630-GN,H630-NE,L630-NE**	①T2BA403SH	TQQ-5BA	110	95
800	**S800-CF,S800-NF,S800-RF,S800-PF,S800-NE** **S800-RE,S800-PE,S800-NN,H800-NE,L800-NE**	①T2BA403SH	TQQ-5BA	110	95
1000	**TL-1000NE**	②TQQ-5BA	TQQ-5BA	110	95
1200	**TL-1200NE**	②TQQ-5BA	TQQ-5BA	110	95
1250	**S1250-NE,S1250-GE,S1250-NN**	①T2BA403SH	TQQ-5BA	110	95
1600	**S1600-NE,S1600-NN**	①T2BA403SH	TQQ-5BA	110	95

Note: Line side interpole barriers are supplied as standard for all front connected breakres except **TB**, **E50-SF**, **E50-CM** and **E100-SF**.

7. Terminal covers CF/CR/CS

Terminal covers prevent live parts of the breaker from being exposed to the external environment. There are three types of terminal covers available: CF for front-connected breakers, CR for rear-connected and plug-in breakers, and CS for front-connected breakers with cable clamps. Select appropriate terminal covers depending on the type and application of the breaker.

(1) CF for front-connected breakers

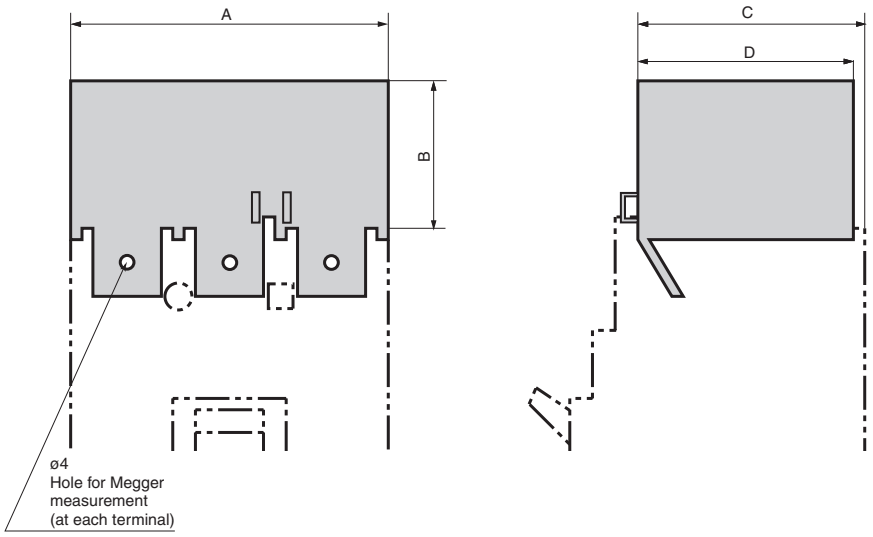

Plug-in mounted version

This version can be mounted simply by being plugged in the breaker body.

■ To be stated when ordering
- Please state the order codes on the next page. One set includes one terminal cover for the ON side and one for the OFF side.
- For the terminal covers for 1250AF, please order with the breakers.

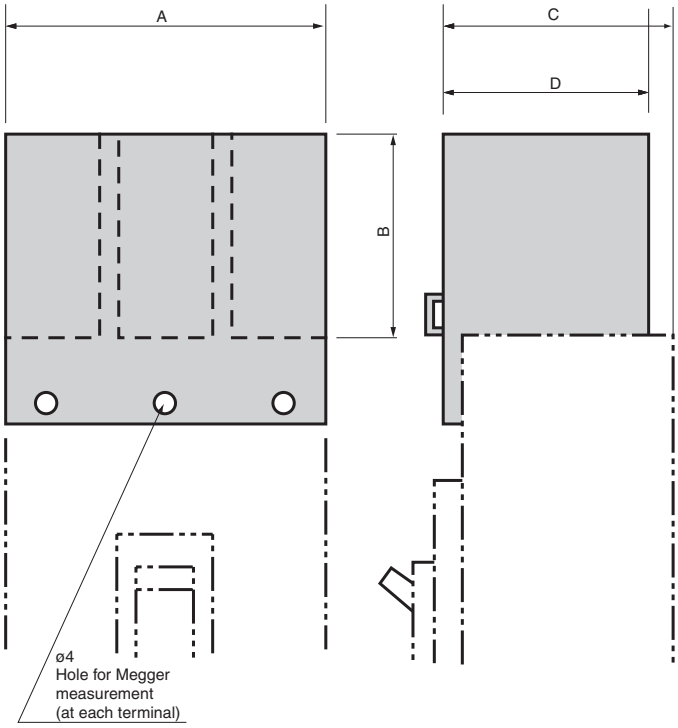

Screw-mounted version

The terminal covers for 630 to 800AF are mounted to the breakers using tapping screws.
The terminal cover for 1250AF is mounted to insert nuts of the breaker cover using screws. The insert nuts do not come standard with the breaker. Please be sure to state "with terminal cover (CF)" when ordering the breaker.

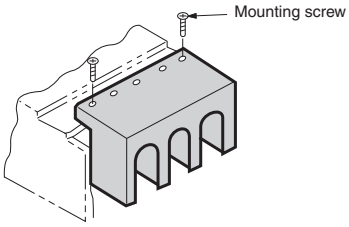

Types and dimensions of terminal covers, units in mm

CF for front-connected breakers

Frame size (A)	Types of breakers	Terminal cover				A			B		C		D		Colour of cover G:Gray C':Clear	Mounting version	
		Size	Note:	Order codes ①	Marking codes	2 poles	3 poles	4 poles	2/3 poles	4 poles	2/3 poles	4 poles	2/3 poles	4 poles		Plug-in mounted	Screw-mounted
50	**E50-SF, E50-CM**	Large		TPR1S ∗ G	—	50	75	—	30	—	63	—	58.5	—	G	○	—
				TPR1S ∗ CL											C'		
		Small		TPT1S ∗ G	—	50	75	—	2.5	—	63	—	61	—	G		
				TPT1S ∗ CL											C'		
	S50-SF	Large		T2CF12L ∗ SLNG	—	50	75	—	50	—	61	—	60.3	—	G	○	—
				T2CF12L ∗ SLNC											C'		
		Small		T2CF12L ∗ SSNG	—	50	75	—	25	—	61	—	60.3	—	G		
				T2CF12L ∗ SSNC											C'		
	S50-GF	Large		T2CF12 ∗ SLNG	T2CF12 ∗ SL	—	90	120	40	40	48	48	46	46	G	○	—
				T2CF12 ∗ SLNC											C'		
		Small		T2CF12 ∗ SSNG	T2CF12 ∗ SS	—	90	120	22	22	48	48	47	47	G		
				T2CF12 ∗ SSNC											C'		
100	**E100-SF**	Large		XPR1 ∗ G	—	49	74	—	30	—	63	—	54	—	G	○	—
				XPR1 ∗ CL											C'		
		Small		TPT1 ∗ G	—	49	74	—	2	—	63	—	54	—	G		
				TPT1 ∗ CL											C'		
	S100-NF, S100-GF S100-NM, S100-NN	Large		T2CF12 ∗ SLNG	T2CF12 ∗ SL	60	90	120	40	40	48	48	46	46	G	○	—
				T2CF12 ∗ SLNC											C'		
		Small		T2CF12 ∗ SSNG	T2CF12 ∗ SS	60	90	120	22	22	48	48	47	47	G		
				T2CF12 ∗ SSNC											C'		
	H100-NF, L100-NF	Large	②	T2CF25 ∗ LLNG	T2CF25 ∗ LL	—	105	140	55	55	89	89	87	87	G	○	—
				T2CF25 ∗ LLNC											C'		
125	**S125-SF, S125-SN**	Large	⑥	T2CF12L ∗ SLNG	—	50	75	100	50	50	61	61	60.3	60.3	G	○	—
				T2CF12L ∗ SLNC											C'		
		Small	⑥	T2CF12L ∗ SSNG	—	50	75	100	25	25	61	61	60.3	60.3	G		
				T2CF12L ∗ SSNC											C'		
	S125-NF, S125-GF S125-NN	Large		T2CF12 ∗ SLNG	T2CF12 ∗ SL	60	90	120	40	40	48	48	46	46	G	○	—
				T2CF12 ∗ SLNC											C'		
		Small		T2CF12 ∗ SSNG	T2CF12 ∗ SS	60	90	120	22	22	48	48	47	47	G		
				T2CF12 ∗ SSNC											C'		
	H125-NF, L125-NF	Large	②	T2CF25 ∗ LLNG	T2CF25 ∗ LL	—	105	140	55	55	89	89	87	87	G	○	—
				T2CF25 ∗ LLNC											C'		
225 250	**S225-NF S225-GF, S225-NM**	Large	②	T2CF25 ∗ SLNG	T2CF25 ∗ SL	—	105	140	55	55	54	54	52	52	G	○	—
				T2CF25 ∗ SLNC											C'		
		Small	②	T2CF25 ∗ SSNG	T2CF25 ∗ SS	—	105	140	29	29	54	54	53.5	53.5	G	○	—
				T2CF25 ∗ SSNC											C'		
	H225-NF, L225-NF S225-GE	Large	②	T2CF25 ∗ LLNG	T2CF25 ∗ LL	—	105	140	55	55	89	89	87	87	G	○	—
				T2CF25 ∗ LLNC											C'		
	E250-SF	Small		T2CF25L ∗ SSNG	T2CF25L ∗ SS	105	105	—	29	—	59	—	57.5	—	G	○	—
				T2CF25L ∗ SSNC											C'		
		Large	③	T2CF25L ∗ SWNG	T2CF25L ∗ SW	147.5	147.5	—	55	—	59	—	57.5	—	G		
				T2CF25L ∗ SWNC											C'		
		Large		T2CF25L ∗ SLNG	T2CF25L ∗ SL	105	105	—	55	—	59	—	57.5	—	G		
				T2CF25L ∗ SLNC											C'		
	S250-SF, S250-SN	Small		T2CF25L ∗ SSNG	T2CF25L ∗ SS	105	105	140	29	29	59	59	57.5	57.5	G		
				T2CF25L ∗ SSNC											C'		
		Large	③	T2CF25L ∗ SWNG	T2CF25L ∗ SW	147.5	147.5	196	55	55	59	59	57.5	57.5	G		
				T2CF25L ∗ SWNC											C'		
		Large		T2CF25L ∗ SLNG	T2CF25L ∗ SL	105	105	140	55	55	59	59	57.5	57.5	G		
				T2CF25L ∗ SLNC											C'		
	S250-NF, S250-GF	Large	②	T2CF25 ∗ SLNG	T2CF25 ∗ SL	—	105	140	55	55	54	54	52	52	G	○	—
				T2CF25 ∗ SLNC											C'		
		Small	②	T2CF25 ∗ SSNG	T2CF25 ∗ SS	—	105	140	29	29	54	54	53.5	53.5	G	○	—
				T2CF25 ∗ SSNC											C'		
400	**S400-CF, S400-NF S400-GF S400-NE, S400-GE S400-PF, S400-PE S400-NN**	Large	③⑥	T2CF40 ∗ SWNG	T2CF40 ∗ SW	—	180	240	110	114	97	98	94.5	98	G	○	—
				T2CF40 ∗ SWNC											C'		
		Large		T2CF40 ∗ SLNG	T2CF40 ∗ SL	—	140	185	85	85	97	97	94.5	94.5	G	○	—
				T2CF40 ∗ SLNC											C'		
	H400-NE, L400-NE	Large	③④⑥	T2CF40 ∗ SWNG	T2CF40 ∗ SW	—	180	240	110	114	134	135	94.5	98	G	○	—
				T2CF40 ∗ SWNC											C'		
		Large	④	T2CF40 ∗ SLNG	T2CF40 ∗ SL	—	140	185	85	85	134	134	94.5	94.5	G	○	—
				T2CF40 ∗ SLNC											C'		
630	**S630-CF, S630-NF S630-RF, S630-PF S630-NE, S630-RE S630-PE, S630-GN**	Large	⑤	T2CF80 ∗ SLNG	TPR-5BA	—	215	285	130	130	99.5 (102)	99.5 (102)	99 (101.5)	99 (101.5)	G	—	○
				T2CF80 ∗ SLNC											C'		
	H630-NE, L630-NE	Large	④⑤	T2CF80 ∗ SLNG	TPR-5BA	—	215	285	130	130	136.5 (139)	136.5 (139)	99 (101.5)	99 (101.5)	G	—	○
				T2CF80 ∗ SLNC											C'		
800	**S800-CF, S800-NF S800-RF, S800-PF S800-NE, S800-RE S800-PE, S800-GN**	Large	⑤	T2CF80 ∗ SLNG	TPR-5BA	—	215	285	130	130	99.5 (102)	99.5 (102)	99 (101.5)	99 (101.5)	G	—	○
				T2CF80 ∗ SLNC											C'		
	H800-NE, L800-NE	Large	④⑤	T2CF80 ∗ SLNG	TPR-5BA	—	215	285	130	130	136.5 (139)	136.5 (139)	99 (101.5)	99 (101.5)	G	—	○
				T2CF80 ∗ SLNC											C'		
1250	**S1250-NE, S1250-GE**	Large	⑤⑥	—	TPR-5BA	—	215	285	130	130	115	115	99 (102.5)	99 (102.5)	G	—	○
				—											C'		

Notes:

①. The asterisk indicates the number of poles. Please state the number of poles at the asterisk position when ordering.

②. Not applicable to 3-pole breakers with extension bars.

③. Applicable to 3-pole breakers with spread extension bars.

④. There will be an approx. 40 mm gap between the bottom of the terminal cover and the breaker mounting surface.

⑤. Values in parentheses indicate the distance to the head of terminal cover mounting screws.

⑥. For 4 poles, Gray colour only.

(1) Terminal covers for motor protection breakers are 3-pole type only.

(2) Terminal covers for switch-disconnectors are 3-pole and 4-pole type only.

7. Terminal covers CF/CR/CS

(2) CR for rear-connected and plug-in breakers
CS for front-connected breakers with cable clamps

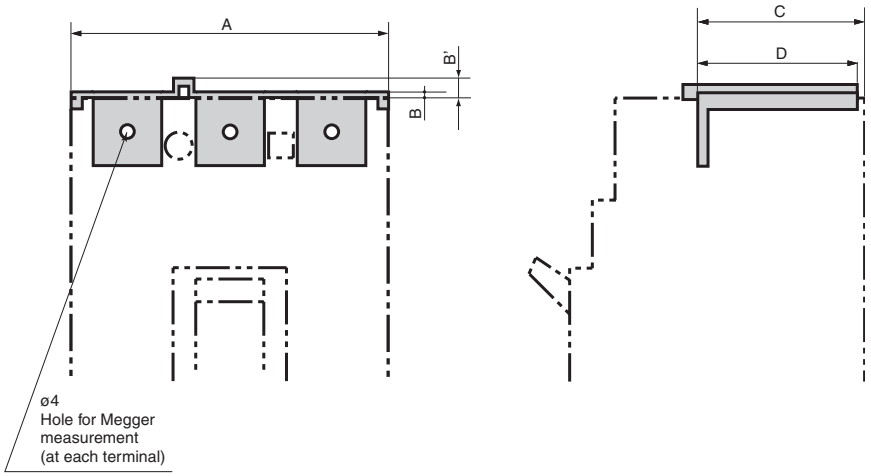

Plug-in mounted version

This version can be mounted simply by being plugged in the breaker body.

■ To be stated when ordering
- Please state "with CR" if ordering along with the breaker.
- Please state the order codes on the next page if ordering separately from the breaker. One set includes one terminal cover for the ON side and one for the OFF side.

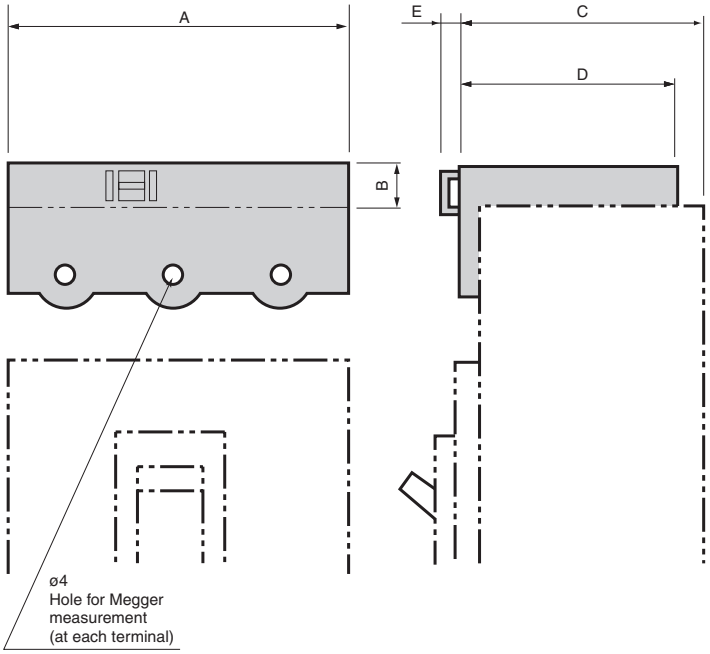

Screw-mounted version

The terminal covers for 630 to 800AF are mounted to the breakers using tapping screws.

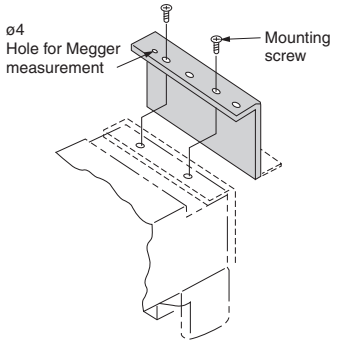

Types and dimensions of terminal covers, units in mm

CR for rear-connected and plug-in breakers

Frame size (A)	Types of breakers	Terminal cover		A			B		B'	C		D		Colour of cover G: Gray	Mounting version	
		Order codes ①	Marking codes	2 poles	3 poles	4 poles	2/3 poles	4 poles		2/3 poles	4 poles	2/3 poles	4 poles		Plug-in mounted	Screw-mounted
50	**S50-SF**	T2CR12L ∗ SG	—	50	75	—	5.5	—	—	61	—	60.3	—	G	○	—
	S50-GF	T2CR12 ∗ SG	T2CR12 ∗ S	—	90	120	2	2	6	41.5	41.5	40.5	40.5	G	○	—
100	**S100-NF, S100-GF S100-NM, S100-NN**	T2CR12 ∗ SG	T2CR12 ∗ S	60	90	120	2	2	6	41.5	41.5	40.5	40.5	G	○	—
	H100-NF, L100-NF	T2CR25 ∗ SG	T2CR25 ∗ S	—	105	140	2	2	6	77.5	77.5	39.5	39.5	G	○	—
125	**S125-SF, S125-SN**	T2CR12L ∗ SG	—	50	75	100	5.5	5	—	61	61	60.3	60.3	G	○	—
	S125-NF, S125-GF	T2CR12 ∗ SG	T2CR12 ∗ S	60	90	120	2	2	6	41.5	41.5	40.5	40.5	G	○	—
	H125-NF, L125-NF	T2CR25 ∗ SG	T2CR25 ∗ S	—	105	140	2	2	6	77.5	77.5	39.5	39.5	G	○	—
225 250	**S225-NF S225-GF, S225-NM**	T2CR25 ∗ SG	T2CR25 ∗ S	—	105	140	2	2	6	42.5	42.5	39.5	39.5	G	○	—
	H225-NF, L225-NF S225-GE	T2CR25 ∗ SG	T2CR25 ∗ S	—	105	140	2	2	6	77.5	77.5	39.5	39.5	G	○	—
	E250-SF	T2CR25L ∗ SG	T2CR25L	105	105	—	2.3	—	5.3	58.6	—	57.1	—	G	○	—
	S250-SF, S250-SN	T2CR25L ∗ SG	T2CR25L	105	105	140	2.3	2.3	5.3	58.6	58.6	57.1	57.1	G	○	—
	S250-NF, S250-GF	T2CR25 ∗ SG	T2CR25 ∗ S	—	105	140	2	2	6	77.5	77.5	39.5	39.5	G	○	—
400	**S400-CF, S400-NF S400-GF S400-NE, S400-GE S400-PF, S400-PE S400-NN**	T2CR40 ∗ SG	T2CR40 ∗ S	—	140	185	3	3	4.5	97	97	93	93	G	○	—
	H400-NE, L400-NE	T2CR40 ∗ SG ③	T2CR40 ∗ S	—	140	185	3	3	4.5	134	134	93	93	G	○	—

Frame size (A)	Types of breakers	Terminal cover		A			B		E (To screw head)	C ②		D ②		Colour of cover G: Gray	Mounting version	
		Order codes ①	Marking codes	2 poles	3 poles	4 poles	2/3 poles	4 poles		2/3 poles	4 poles	2/3 poles	4 poles		Plug-in mounted	Screw-mounted
50	**E50-SF, E50-CM**	TPS1S ∗ G	—	50	75	—	2	—	2.5	63	—	61	—	G	○	—
100	**E100-SF**	XPS1 ∗ G	—	49	74	—	10	—	2.5	63	—	54	—	G	○	—
630	**S630-CF, S630-NF S630-RF, S630-PF S630-RE, S630-PE S630-NE, S630-GN**	T2CR80 ∗ SG	XPS6	—	206	280	15	18	(3.5)	101 (103.5)	99 (101.5)	100.5 (103)	98 (100.5)	G	—	○
	H630-NE, L630-NE	T2CR80 ∗ LG	—	—	210	280	15	15	(3.5)	136 (138.5)	136 (138.5)	135 (137.5)	135 (137.5)	G	—	○
800	**S800-CF, S800-NF S800-RF, S800-PF S800-RE, S800-PE S800-NE, S800-NN**	T2CR80 ∗ SG	XPS6	—	206	280	15	18	(3.5)	101 (103.5)	99 (101.5)	100.5 (103)	98 (100.5)	G	—	○
	H800-NE, L800-NE	T2CR80 ∗ LG	—	—	210	280	15	15	(3.5)	136 (138.5)	136 (138.5)	135 (137.5)	135 (137.5)	G	—	○

Notes:

①. The asterisk indicates the number of poles. Please state the number of poles at the asterisk position when ordering. One set includes one terminal cover fot the ON side and one for the OFF side.

②. Values in parentheses indicate the distance to the head of terminal cover mounting screws.

③. There will be an approx. 40 mm gap between the bottom of the terminal cover and the breaker mounting surface.

(1) Terminal covers for motor protection breakers are 3-pole type only.

(2) Terminal covers for switch-disconnectors are 3-pole and 4-pole type only.

CS for front-connected with cable clamps breakers

Frame size (A)	Types of breakers	Terminal cover		A		B	B'	C	D	Colour of cover G: Gray	Mounting version	
		Order codes ①	Marking codes	3 poles	4 poles						Plug-in mounted	Screw-mounted
50	**S50-GF**	T2CS12 ∗ SG	T2CS12 ∗ S	90	120	2.5	6	61	59.5	G	○	—
100	**S100-NF, S100-GF S100-NM, S100-NN**	T2CS12 ∗ SG	T2CR12 ∗ S	90	120	2.5	6	61	59.5	G	○	—
	H100-NF, L100-NF	T2CS25 ∗ SG	T2CS25 ∗ S	105	140	2.5	6	96	59.5	G	○	—
125	**S125-NF, S125-GF S125-NN**	T2CS12 ∗ SG	T2CS12 ∗ S	90	120	2.5	6	61	59.5	G	○	—
	H125-NF, L125-NF	T2CR25 ∗ SG	T2CR25 ∗ S	105	140	2.5	6	96	5.5	G	○	—
225	**S225-NF S225-GF, S225-NM**	T2CS25 ∗ SG	T2CS25 ∗ S	105	140	2.5	6	61	59.5	G	○	—
	H225-NF, L225-NF S225-GE	T2CS25 ∗ SG	T2CS25 ∗ S	105	140	2.5	6	96	59.5	G	○	—
250	**S250-NF, S250-GF**	T2CS25 ∗ SG	T2CS25 ∗ S	105	140	2.5	6	61	59.5	G	○	—
400	**S400-CF, S400-NF S400-GF S400-NE, S400-GE S400-PF, S400-PE S400-NN**	T2CS40 ∗ SG	T2CS40 ∗ S	140	185	3	5	97	93	G	○	—
	H400-NE, L400-NE	T2CS40 ∗ SG	T2CS40 ∗ S	140	185	3	5	134	93	G	○	—

Notes:

①. The asterisk indicates the number of poles. Please state the number of poles at the asterisk position when ordering. One set includes one terminal cover fot the ON side and one for the OFF side.

(1) Terminal covers for motor protection breakers are 3-pole type only.

8. Mechanical interlock

Slide interlock (MS)

The slide interlock provides a mechanical interlock between two breakers so that only one of the two can be closed. Moving the slide on the front of the breaker left and right allows activation or deactivation of the interlock.

Dimensions mm

Frame size (A)	Types of breakers	Number of poles	Breaker connection method	Interlock Order codes
50 125	**S50-SF** **S125-SF,S125-SN**	3	FC,RC	T2MS16L3SF
		4	FC,RC	T2MS16L4SF

ASL : Arrangement Standard Line
HL : Handle Frame Centre Line
℄ : Handle Centre Line

Notes:
(1) The terminal block can not be fitted to the right-hand side of the left breaker and to the left-hand side of the right breaker.
(2) The UVT with time-delay can not be fitted to the left breaker.

Panel cutout (front view)

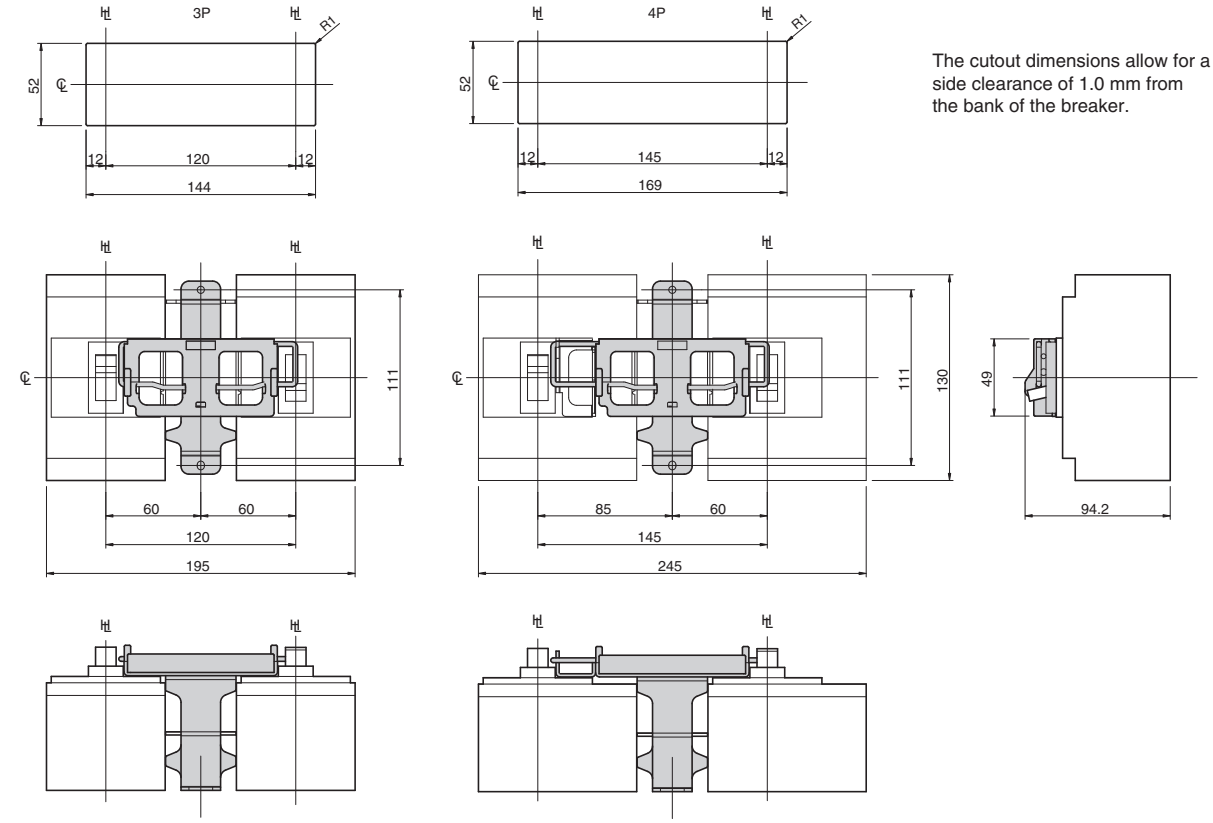

The cutout dimensions allow for a side clearance of 1.0 mm from the bank of the breaker.

Drilling plan (front view)

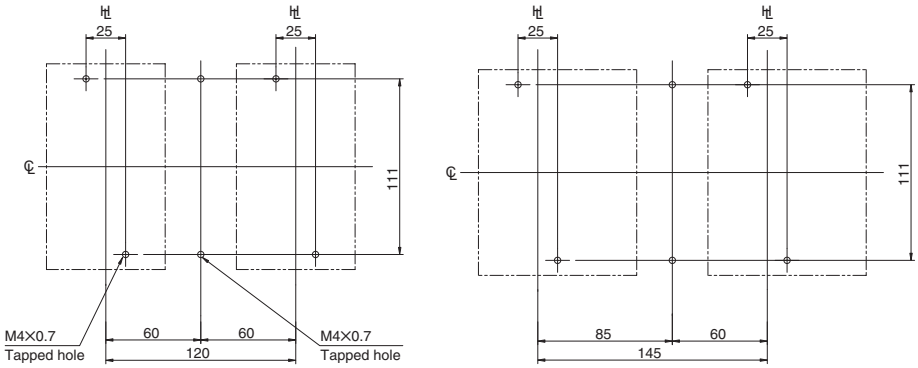

Dimensions mm

Frame size (A)	Types of breakers	Number of poles	Breaker connection method	Interlock Order codes
50 125	**S50-SF** **S125-SF,S125-SN**	3	PMC	T2MS16L3SC

ASL: Arrangement Standard Line
HL: Handle Frame Centre Line
℄: Handle Centre Line

Notes:

(1) The terminal block can not be fitted to the right-hand side of the left breaker and to the left-hand side of the right breaker.

(2) The UVT with time-delay can not be fitted to the left breaker.

Panel cutout (front view)

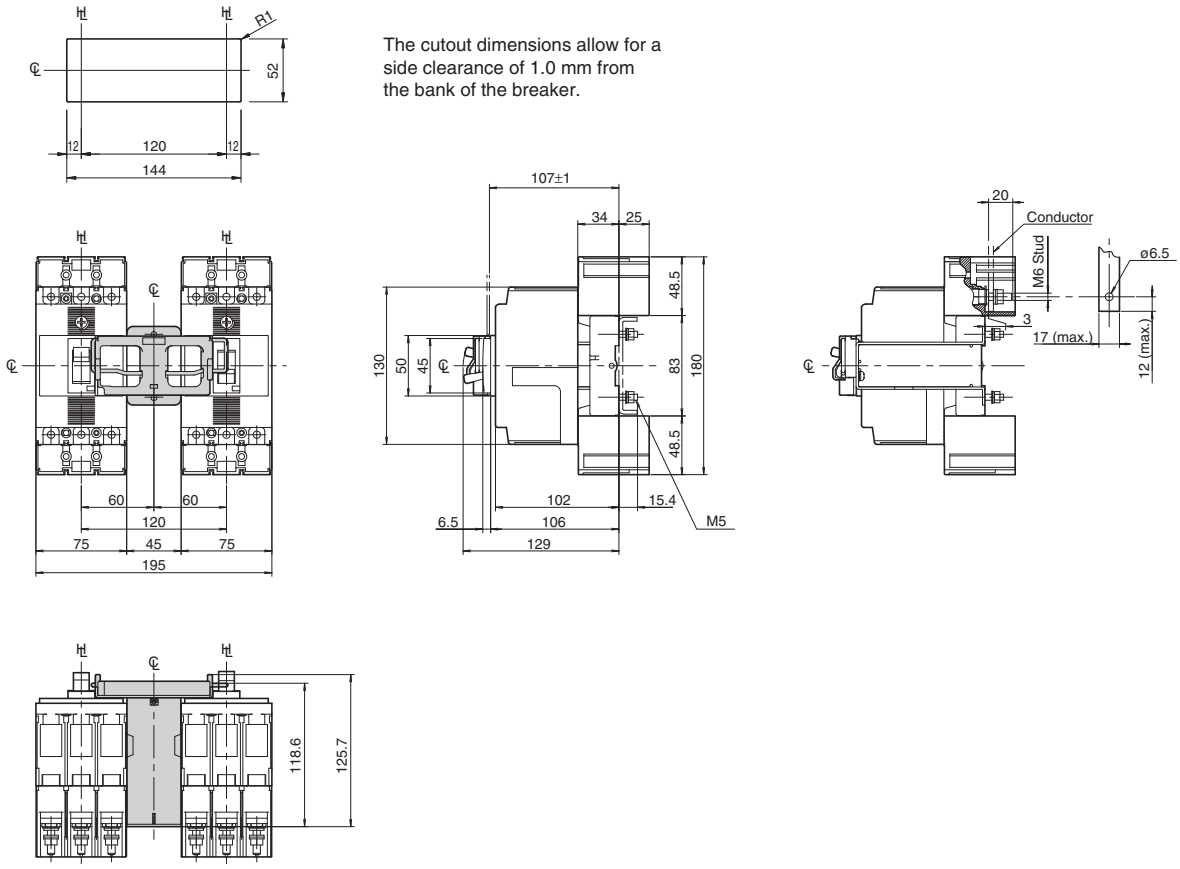

The cutout dimensions allow for a side clearance of 1.0 mm from the bank of the breaker.

Drilling plan (front view)

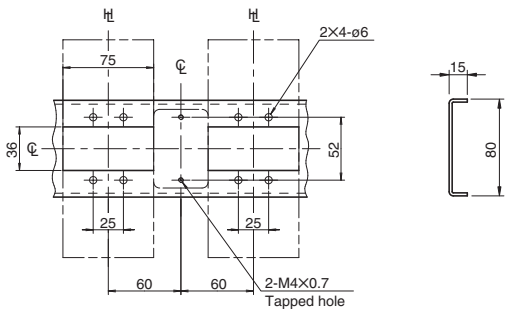

8. Mechanical interlock

ASL: Arrangement Standard Line
HL: Handle Frame Centre Line
℄: Handle Centre Line

Dimensions mm

Frame size (A)	Types of breakers	Number of poles	Breaker connection method	Interlock Order codes
50 100 125	**S50-GF** **S100-NF,S100-GF,S100-NN** **S125-NF,S125-GF,S125-NN**	3	FC,RC	T2MS123SF
		4	FC,RC	T2MS124SF

Notes:
(1) The terminal block can not be fitted to the right-hand side of the left breaker and to the left-hand side of the right breaker.
(2) The UVT with time-delay can not be fitted to the left breaker.

Panel cutout (front view)

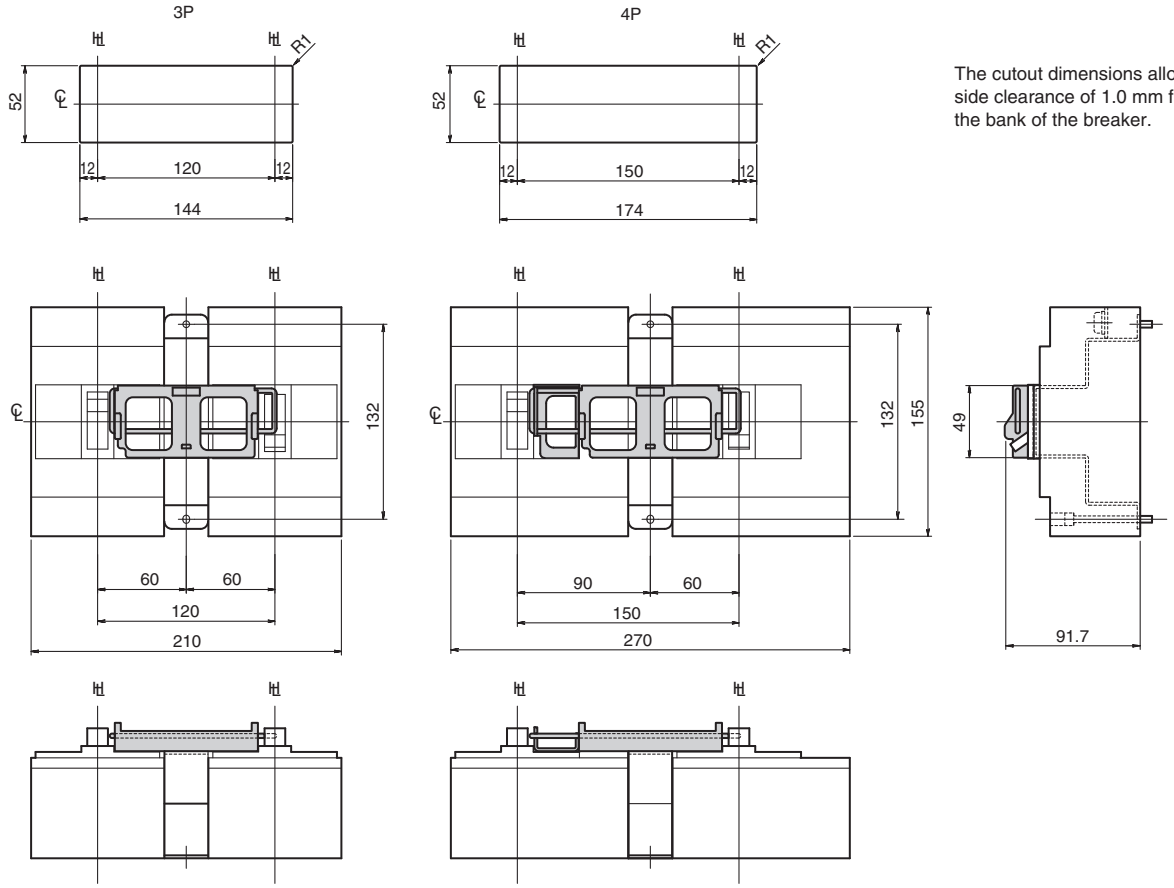

The cutout dimensions allow for a side clearance of 1.0 mm from the bank of the breaker.

Drilling plan (front view)

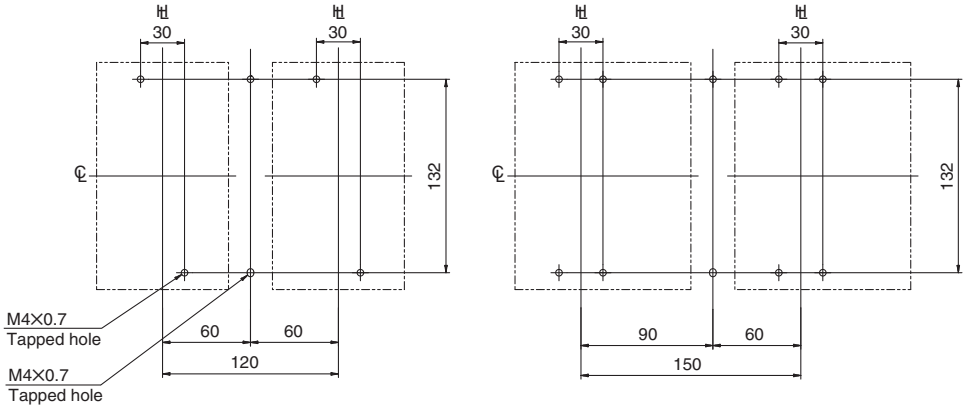

ASL: Arrangement Standard Line
⊞: Handle Frame Centre Line
℄: Handle Centre Line

Dimensions mm

Frame size (A)	Types of breakers	Number of poles	Breaker connection method	Interlock Order codes
50 100 125	**S50-GF** **S100-NF,S100-GF,S100-NN** **S125-NF,S125-GF,S125-NN**	3	PMB	T2MS123SP
		4	PMB	T2MS124SP

Notes:
(1) The terminal block can not be fitted to the right-hand side of the left breaker and to the left-hand side of the right breaker.
(2) The UVT with time-delay can not be fitted to the left breaker.

Panel cutout (front view)

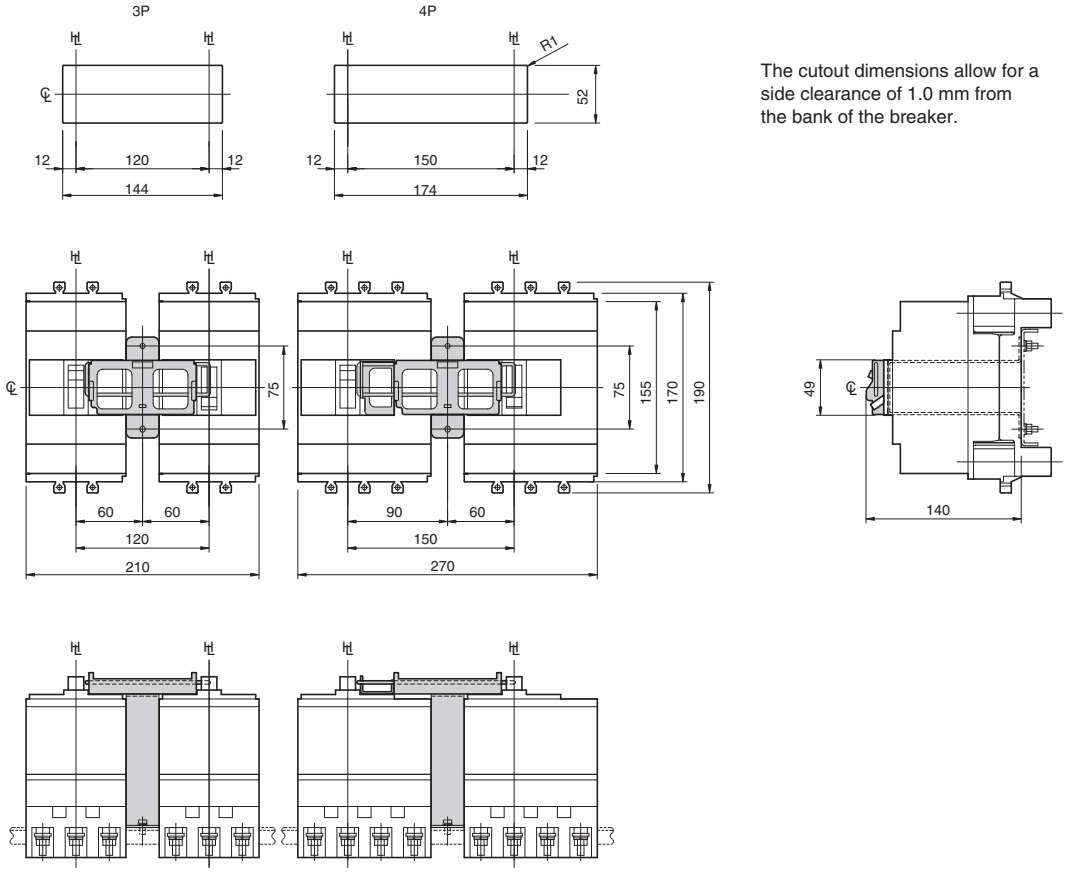

The cutout dimensions allow for a side clearance of 1.0 mm from the bank of the breaker.

Drilling plan (front view)

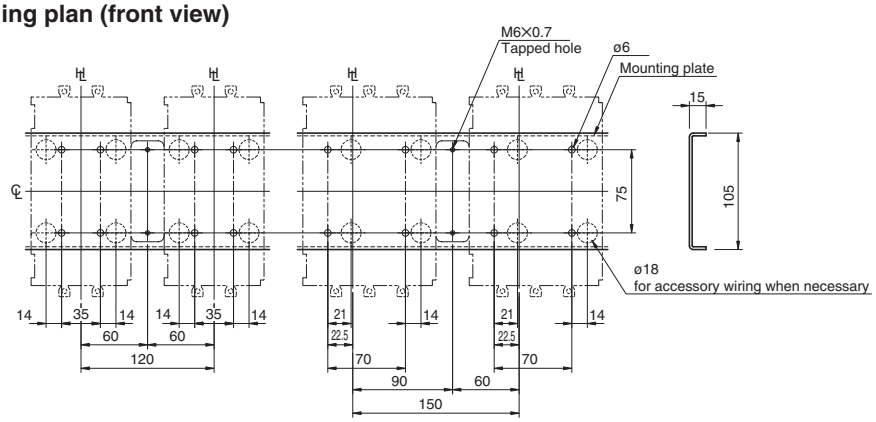

6
Accessories

8. Mechanical interlock

ASL : Arrangement Standard Line
HL : Handle Frame Centre Line
℄ : Handle Centre Line

Dimensions mm

Frame size (A)	Types of breakers	Number of poles	Breaker connection method	Interlock Order codes
50 100 125	**S50-GF** **S100-NF,S100-GF,S100-NN** **S125-NF,S125-GF,S125-NN**	3	PMC	T2MS123SC

Notes:
(1) The terminal block can not be fitted to the right-hand side of the left breaker and to the left-hand side of the right breaker.
(2) The UVT with time-delay can not be fitted to the left breaker.

Panel cutout (front view)

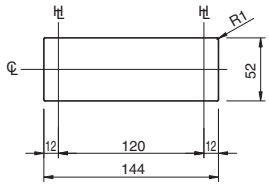

The cutout dimensions allow for a side clearance of 1.0 mm from the bank of the breaker.

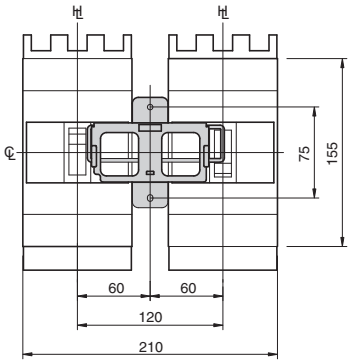

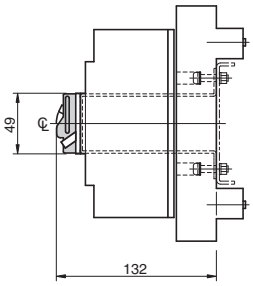

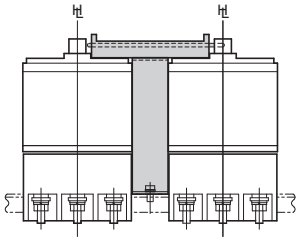

Drilling plan (front view)

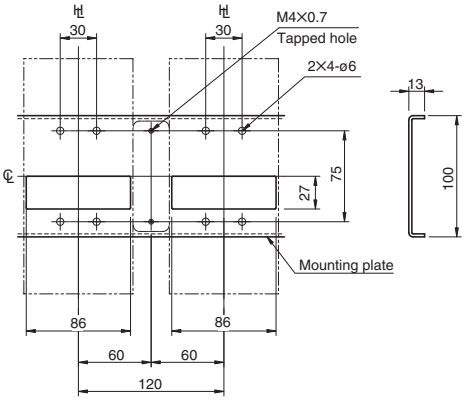

ASL: Arrangement Standard Line
⊞: Handle Frame Centre Line
℄: Handle Centre Line

Dimensions mm

Frame size (A)	Types of breakers	Number of poles	Breaker connection method	Interlock Order codes	A
100 125	**H100-NF,L100-NF** **H125-NF,L125-NF**	3	FC,RC	T2MS253LF	126.7
		4	FC,RC	T2MS254LF	
225 250	**S225-NF,S225-GF** **S250-NF,S250-GF**	3	FC,RC	T2MS253SF	91.7
		4	FC,RC	T2MS254SF	
	H225-NF,L225-NF,S225-GE	3	FC,RC	T2MS253LF	126.7
		4	FC,RC	T2MS254LF	

Notes:

(1) Due to the shortage of the insulating distance, the interlock can be fitted to the breakers equipped by the insulation process extension bars.

(2) The terminal block can not be fitted to the right-hand side of the left breaker and to the left-hand side of the right breaker.

(3) The UVT with time-delay can not be fitted to the left breaker.

Panel cutout (front view)

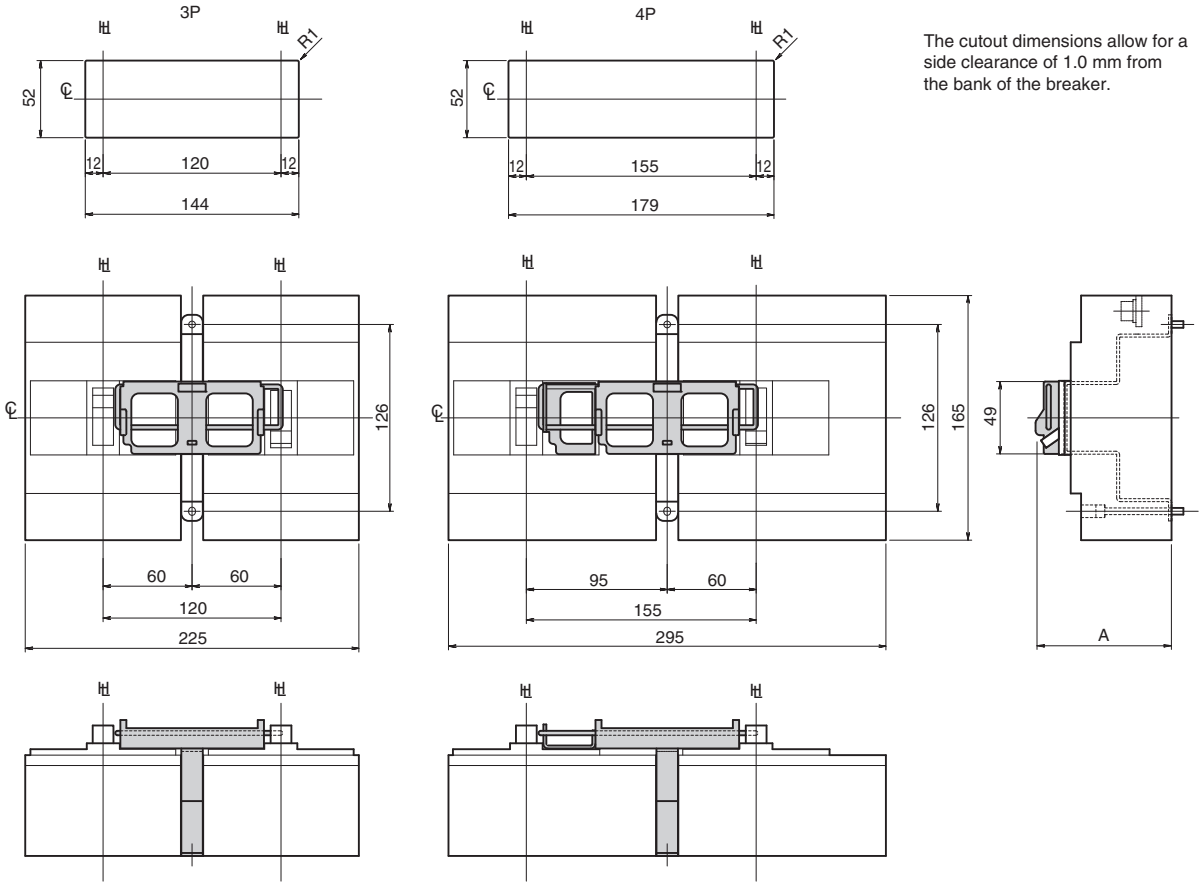

The cutout dimensions allow for a side clearance of 1.0 mm from the bank of the breaker.

Drilling plan (front view)

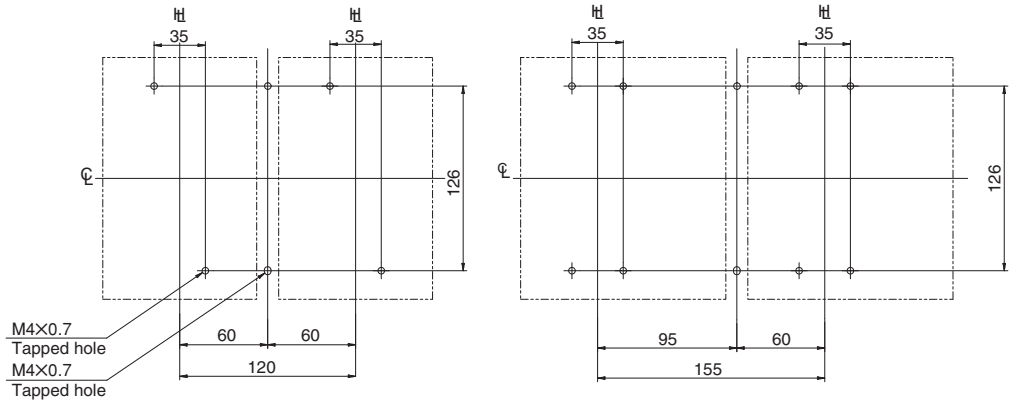

8. Mechanical interlock

ASL: Arrangement Standard Line
HL: Handle Frame Centre Line
℄: Handle Centre Line

Dimensions mm

Frame size (A)	Types of breakers	Number of poles	Breaker connection method	Interlock Order codes	A
100 125	**H100-NF,L100-NF** **H125-NF,L125-NF**	3	PMB	T2MS253LP	175
		4	PMB	T2MS254LP	
225 250	**S225-NF,S225-GF** **S250-NF,S250-GF**	3	PMB	T2MS253SP	140
		4	PMB	T2MS254SP	
	H225-NF,L225-NF,S225-GE	3	PMB	T2MS253LP	175
		4	PMB	T2MS254LP	

Notes:
(1) The terminal block can not be fitted to the right-hand side of the left breaker and to the left-hand side of the right breaker.
(2) The UVT with time-delay can not be fitted to the left breaker.

Panel cutout (front view)

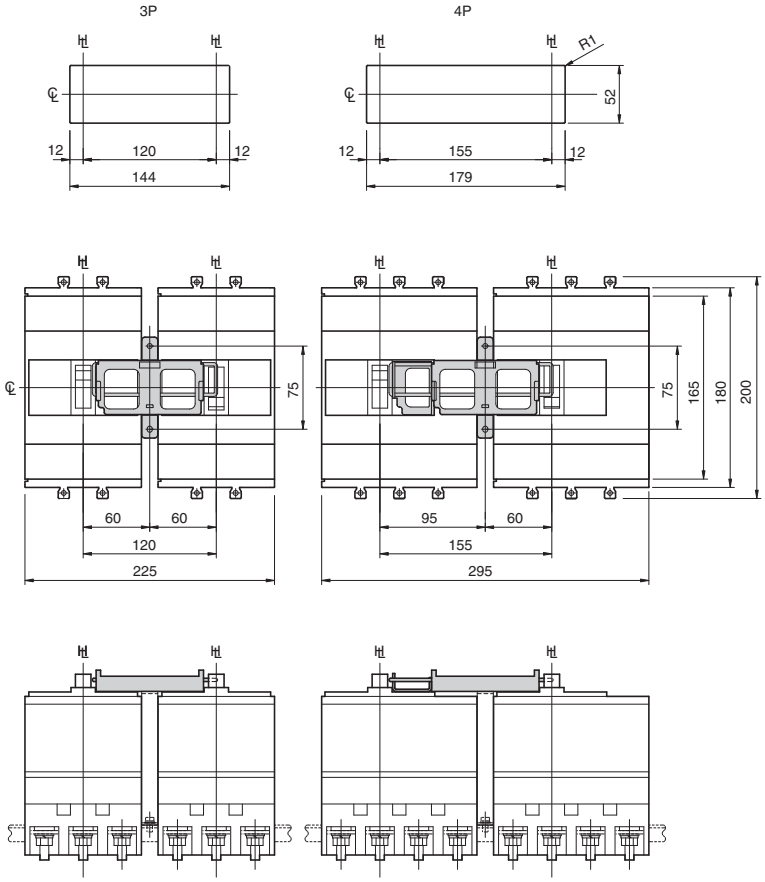

The cutout dimensions allow for a side clearance of 1.0 mm from the bank of the breaker.

Drilling plan (front view)

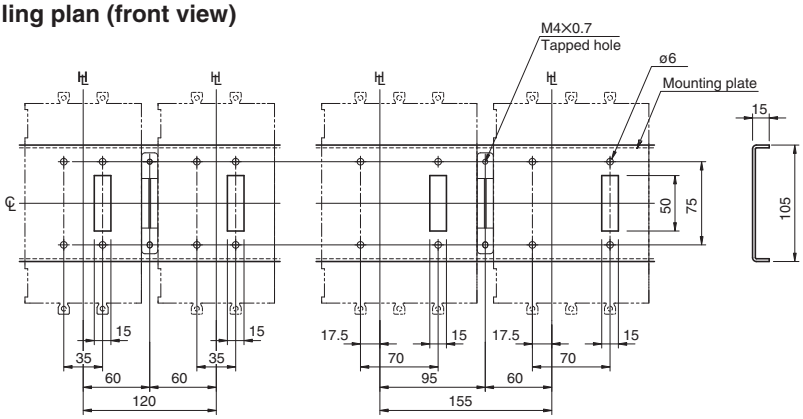

ASL: Arrangement Standard Line
HL: Handle Frame Centre Line
℄: Handle Centre Line

Dimensions mm

Frame size (A)	Types of breakers	Number of poles	Breaker connection method	Interlock Order codes	A
100 125	**H100-NF,L100-NF** **H125-NF,L125-NF**	3	PMC	T2MS253LC	150
225 250	**S225-NF,S225-GF** **S250-NF,S250-GF**	3	PMC	T2MS253SC	115
	H225-NF,L225-NF,S225-GE	3	PMC	T2MS253LC	150

Notes:

(1) The terminal block can not be fitted to the right-hand side of the left breaker and to the left-hand side of the right breaker.

(2) The UVT with time-delay can not be fitted to the left breaker.

Panel cutout (front view)

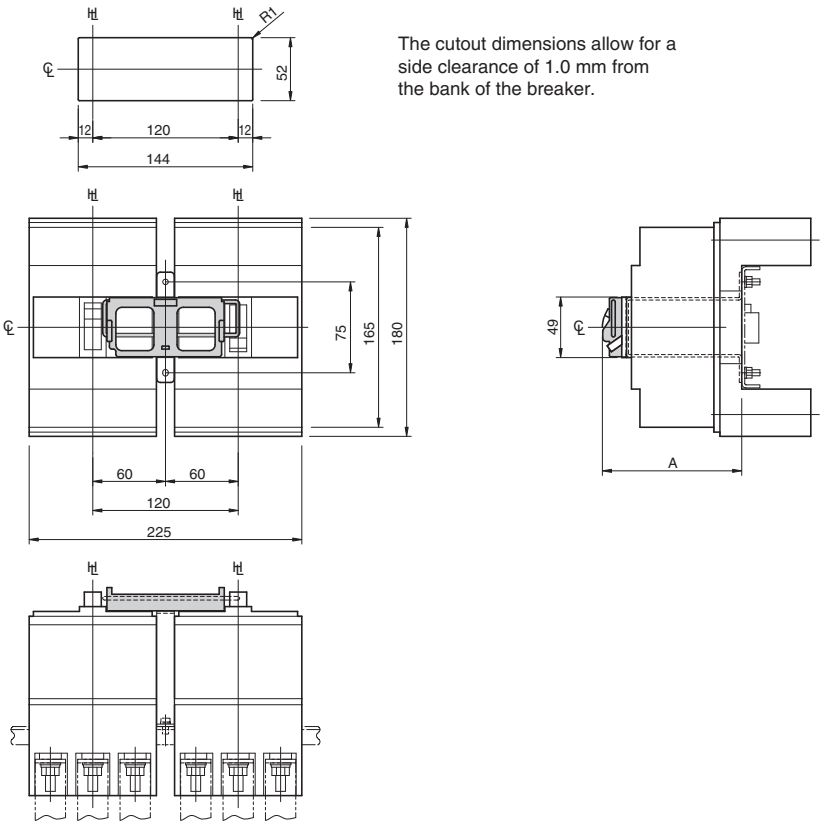

The cutout dimensions allow for a side clearance of 1.0 mm from the bank of the breaker.

Drilling plan (front view)

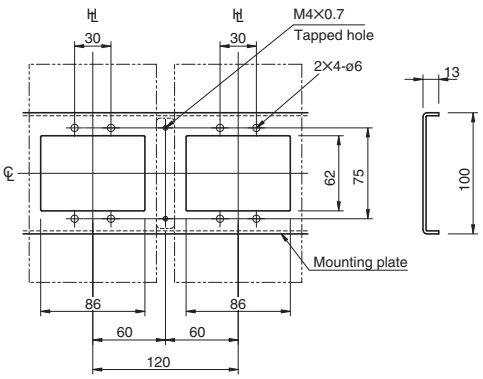

6

Accessories

8. Mechanical interlock

ASL: Arrangement Standard Line
HL: Handle Frame Centre Line
℄: Handle Centre Line

Dimensions mm

Frame size (A)	Types of breakers	Number of poles	Breaker connection method	Interlock Order codes
225 250	**E250-SF,S250-SF** **S250-SN**	3	FC,RC	T2MS25L3SF
		4	FC,RC	T2MS25L4SF

Notes:
(1) Due to the shortage of the insulating distance, the interlock can be fitted to the breakers equipped by the insulation process extension bars.
(2) The terminal block can not be fitted to the right-hand side of the left breaker and to the left-hand side of the right breaker.
(3) The UVT with time-delay can not be fitted to the left breaker.

Panel cutout (front view)

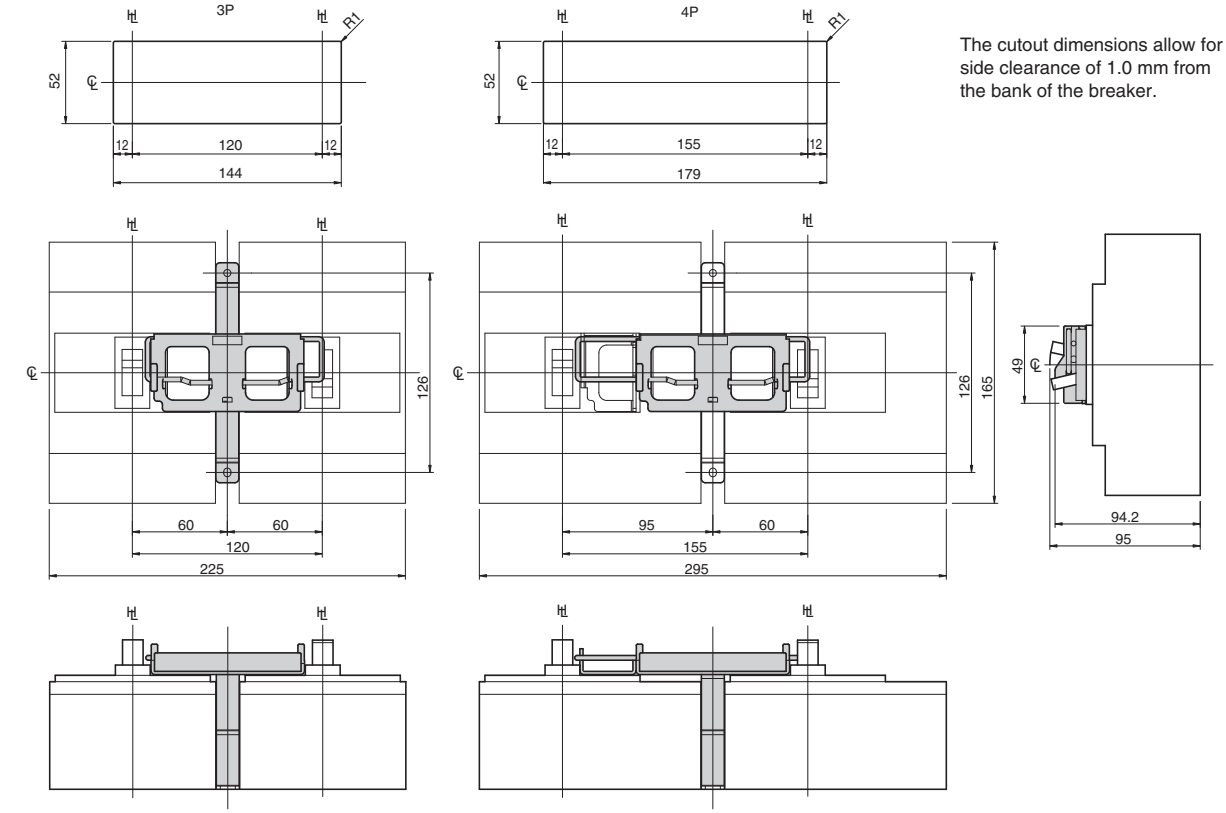

The cutout dimensions allow for a side clearance of 1.0 mm from the bank of the breaker.

Drilling plan (front view)

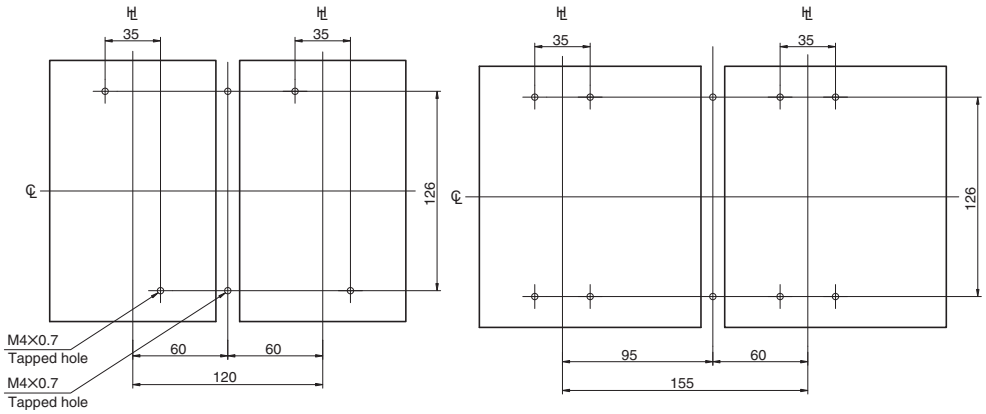

ASL: Arrangement Standard Line
℄: Handle Frame Centre Line
℄: Handle Centre Line

Dimensions mm

Frame size (A)	Types of breakers	Number of poles	Breaker connection method	Interlock Order codes
225 250	**E250-SF,S250-SF** **S250-SN**	3	PMC	T2MS25L3SC

Notes:

(1) The terminal block can not be fitted to the right-hand side of the left breaker and to the left-hand side of the right breaker.

(2) The UVT with time-delay can not be fitted to the left breaker.

Panel cutout (front view)

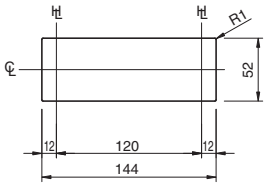

The cutout dimensions allow for a side clearance of 1.0 mm from the bank of the breaker.

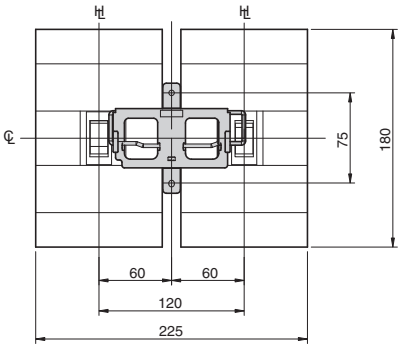

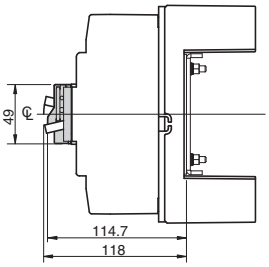

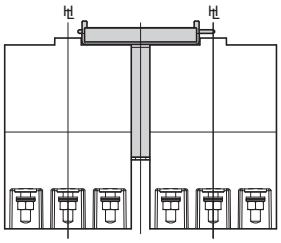

Drilling plan (front view)

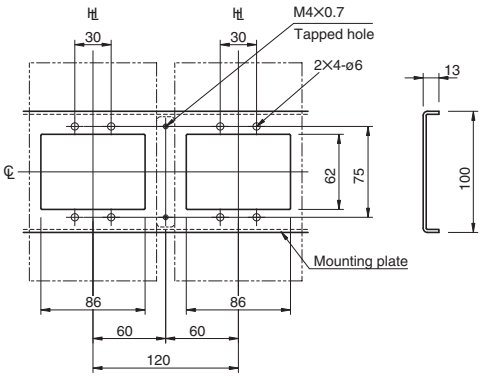

6

Accessories

8. Mechanical interlock

ASL: Arrangement Standard Line
HL: Handle Frame Centre Line
℄: Handle Centre Line

Dimensions mm

Frame size (A)	Types of breakers	Number of poles	Breaker connection method	Interlock Order codes	A
400	**S400-CF,S400-NF,S400-NE S400-GF,S400-GE,S400-NN S400-PF,S400-PE**	3	FC,RC	T2MS403SF	135.5
		4	FC,RC	T2MS404SF	
	H400-NE,L400-NE	3	FC,RC	T2MS403LF	172.5
		4	FC,RC	T2MS404LF	

Notes:
(1) Due to the shortage of the insulating distance, the interlock can be fitted to the breakers equipped by the insulation process extension bars.
(2) The terminal block can not be fitted to the right-hand side of the left breaker and to the left-hand side of the right breaker.
(3) The UVT with time-delay can not be fitted to the left breaker.
(4) Wide terminal covers can not be fitted to interfere with each other. Straight terminal covers can be fitted.

Panel cutout (front view)

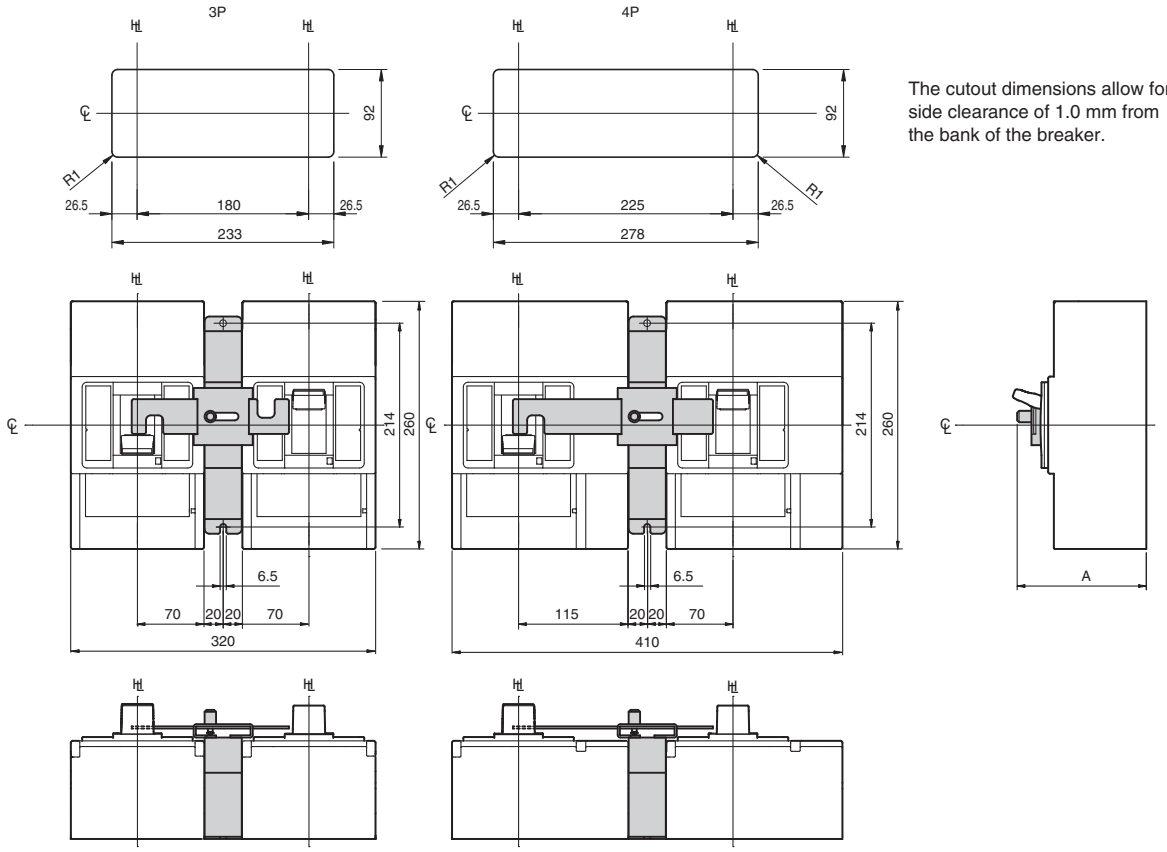

The cutout dimensions allow for a side clearance of 1.0 mm from the bank of the breaker.

Drilling plan (front view)

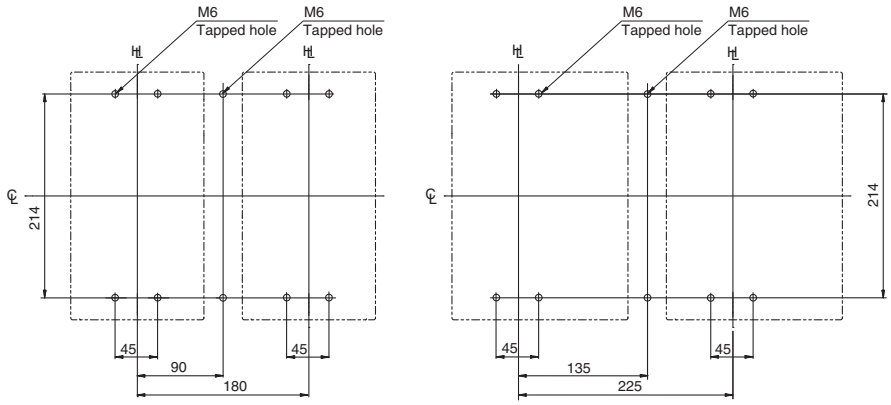

ASL: Arrangement Standard Line
℄: Handle Frame Centre Line
℄: Handle Centre Line

Dimensions mm

Frame size (A)	Types of breakers	Number of poles	Breaker connection method	Interlock Order codes	A
400	**S400-CF,S400-NF,S400-NE S400-GF,S400-GE,S400-NN S400-PF,S400-PE**	3	PMB	T2MS403SP	183.5
		4	PMB	T2MS404SP	
	H400-NE,L400-NE	3	PMB	T2MS403LP	220.5
		4	PMB	T2MS404LP	

Notes:
(1) The terminal block can not be fitted to the right-hand side of the left breaker and to the left-hand side of the right breaker.
(2) The UVT with time-delay can not be fitted to the left breaker.
(3) Wide terminal covers can not be fitted to interfere with each other. Straight terminal covers can be fitted.

Panel cutout (front view)

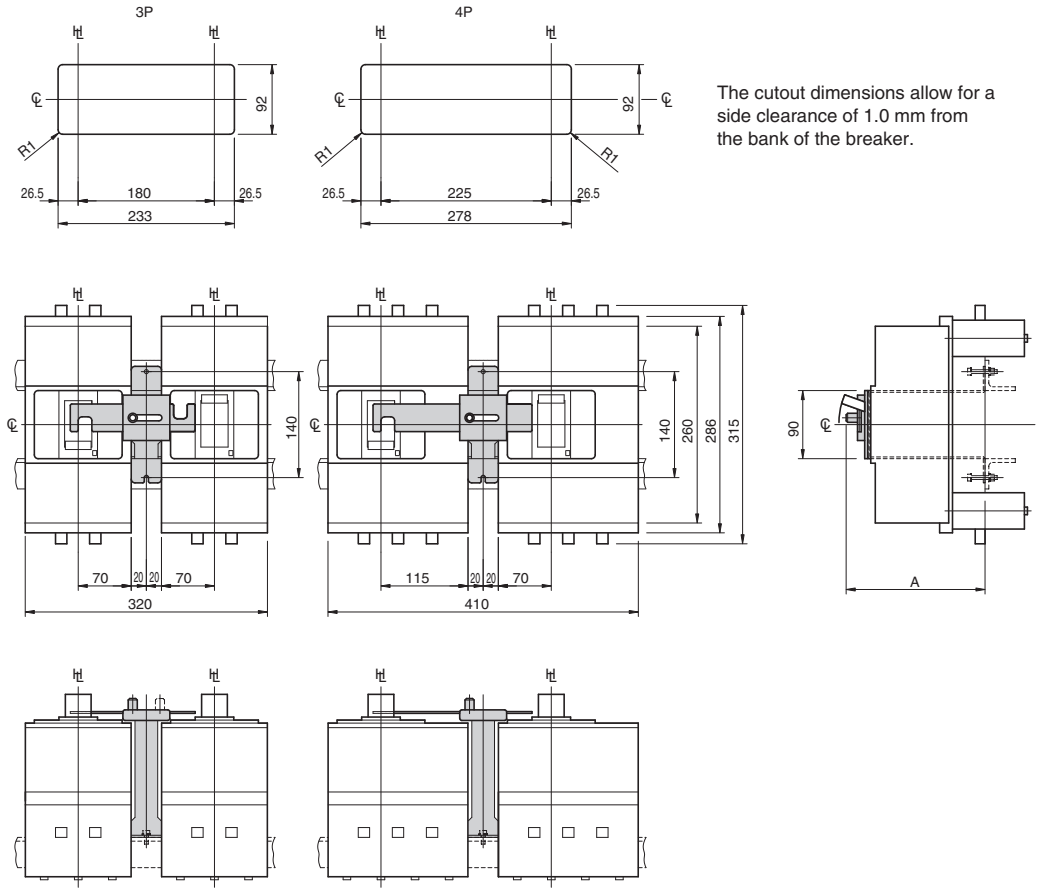

The cutout dimensions allow for a side clearance of 1.0 mm from the bank of the breaker.

Drilling plan (front view)

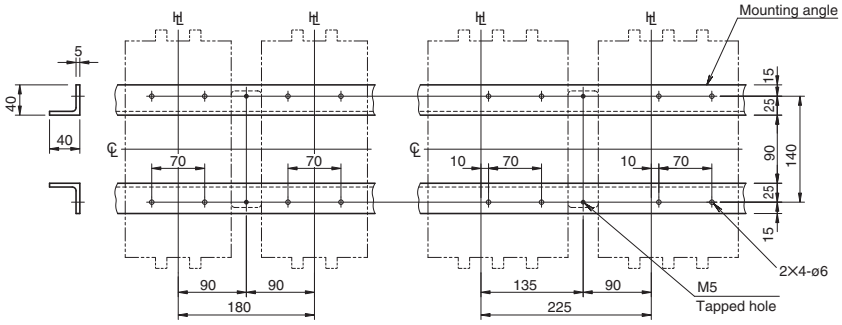

8. Mechanical interlock

ASL : Arrangement Standard Line
HL : Handle Frame Centre Line
℄ : Handle Centre Line

Dimensions mm

Frame size (A)	Types of breakers	Number of poles	Breaker connection method	Interlock Order codes	A
400	**S400-CF,S400-NF,S400-NE S400-GF,S400-GE,S400-NN S400-PF,S400-PE**	3	PMC	T2MS403SC	158.5
	H400-NE,L400-NE	3	PMC	T2MS403LC	195.5

Notes:
(1) The terminal block can not be fitted to the right-hand side of the left breaker and to the left-hand side of the right breaker.
(2) The UVT with time-delay can not be fitted to the left breaker.
(3) Wide terminal covers can not be fitted to interfere with each other. Straight terminal covers can be fitted.

Panel cutout (front view)

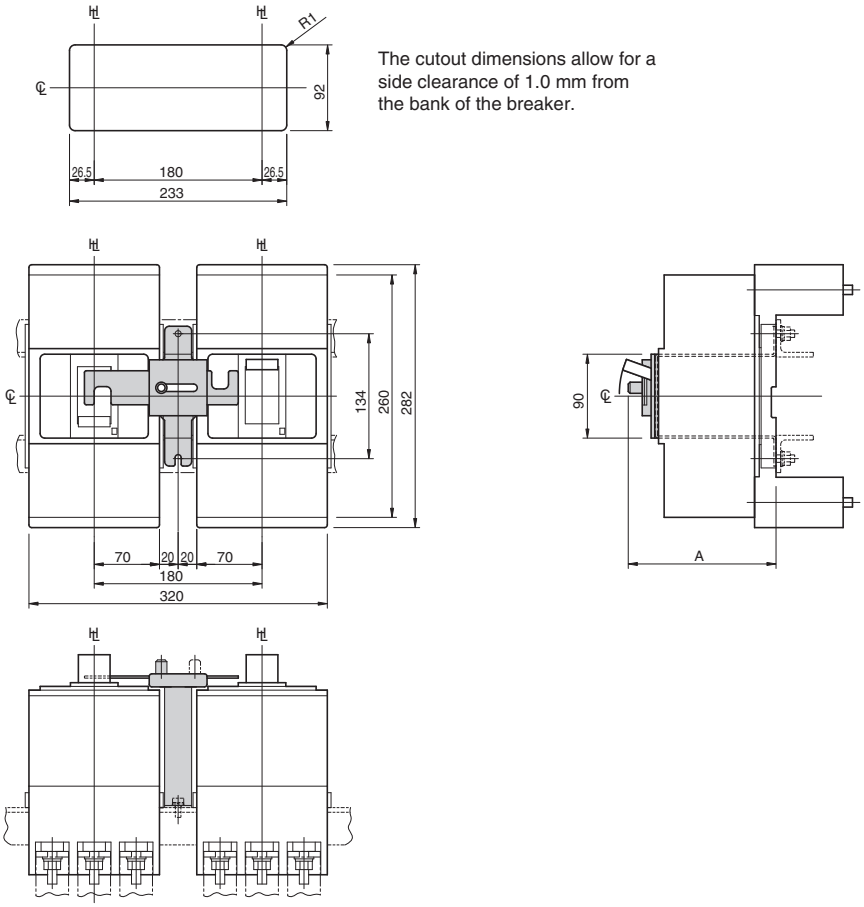

The cutout dimensions allow for a side clearance of 1.0 mm from the bank of the breaker.

Drilling plan (front view)

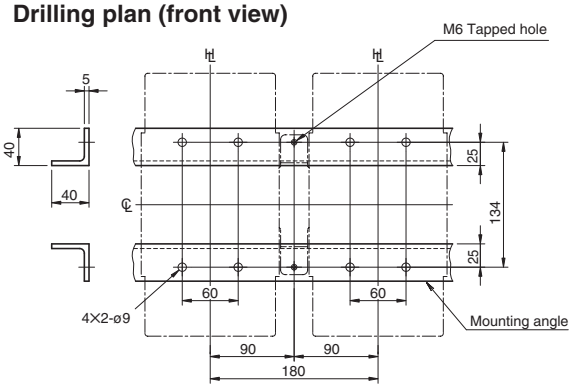

ASL: Arrangement Standard Line
℄: Handle Frame Centre Line
℄: Handle Centre Line

Dimensions mm

Frame size (A)	Types of breakers	Number of poles	Breaker connection method	Interlock Order codes	A
630 800	**S630-CF,S630-NF,S630-RF,S630-PF S630-NE,S630-RE,S630-PE,S630-GN S800-CF,S800-NF,S800-RF,S800-PF S800-NE,S800-RE,S800-PE,S800-NN**	3	FC,RC	T2MS803SF	135.5
		4	FC,RC	T2MS804SF	
	H630-NE,L630-NE H800-NE,L800-NE	3	FC,RC	T2MS803LF	172.5
		4	FC,RC	T2MS804LF	

Notes:
(1) The terminal block can not be fitted to the right-hand side of the left breaker and to the left-hand side of the right breaker.
(2) The UVT with time-delay can not be fitted to the left breaker.

Panel cutout (front view)

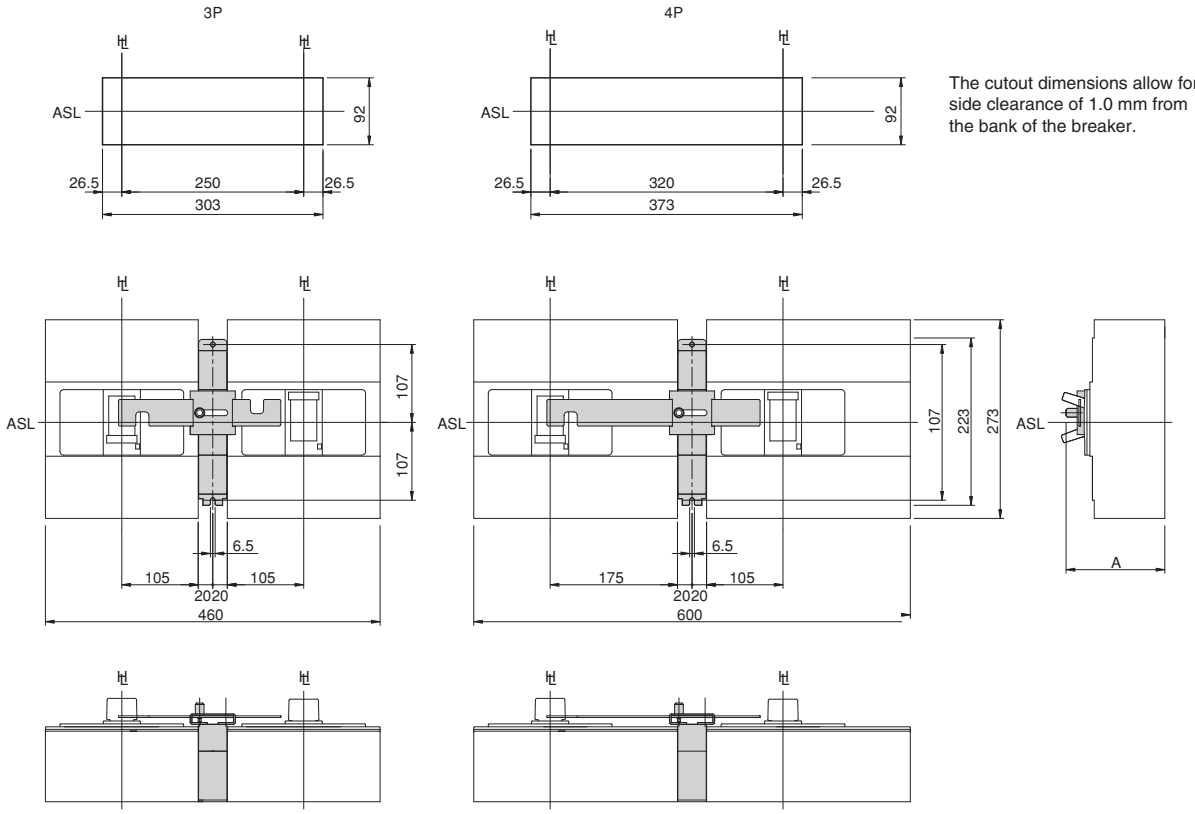

The cutout dimensions allow for a side clearance of 1.0 mm from the bank of the breaker.

Drilling plan (front view)

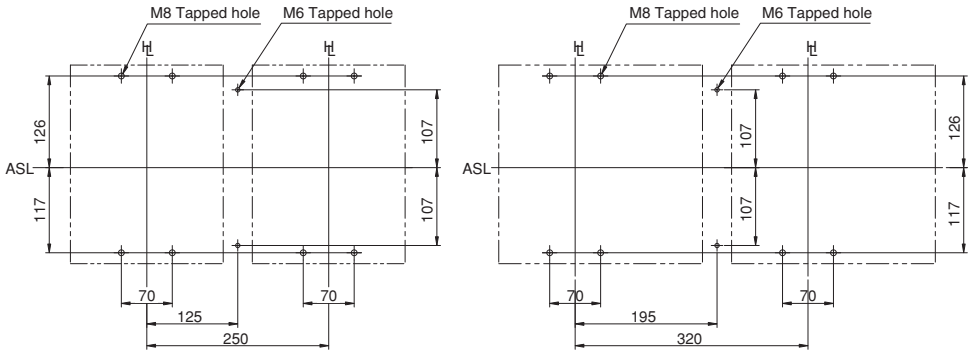

6
Accessories

8. Mechanical interlock

ASL : Arrangement Standard Line
℄ : Handle Frame Centre Line
℄ : Handle Centre Line

Dimensions mm

Frame size (A)	Types of breakers	Number of poles	Breaker connection method	Interlock Order codes	A
630 800	**S630-CF,S630-NF,S630-RF,S630-PF S630-NE,S630-RE,S630-PE,S630-GN S800-CF,S800-NF,S800-RF,S800-PF S800-NE,S800-RE,S800-PE,S800-NN**	3	PMB	T2MS803SP	187
		4	PMB	T2MS804SP	
	H630-NE,L630-NE H800-NE,L800-NE	3	PMB	T2MS803LP	224
		4	PMB	T2MS804LP	

Notes:
(1) The terminal block can not be fitted to the right-hand side of the left breaker and to the left-hand side of the right breaker.
(2) The UVT with time-delay can not be fitted to the left breaker.

Panel cutout (front view)

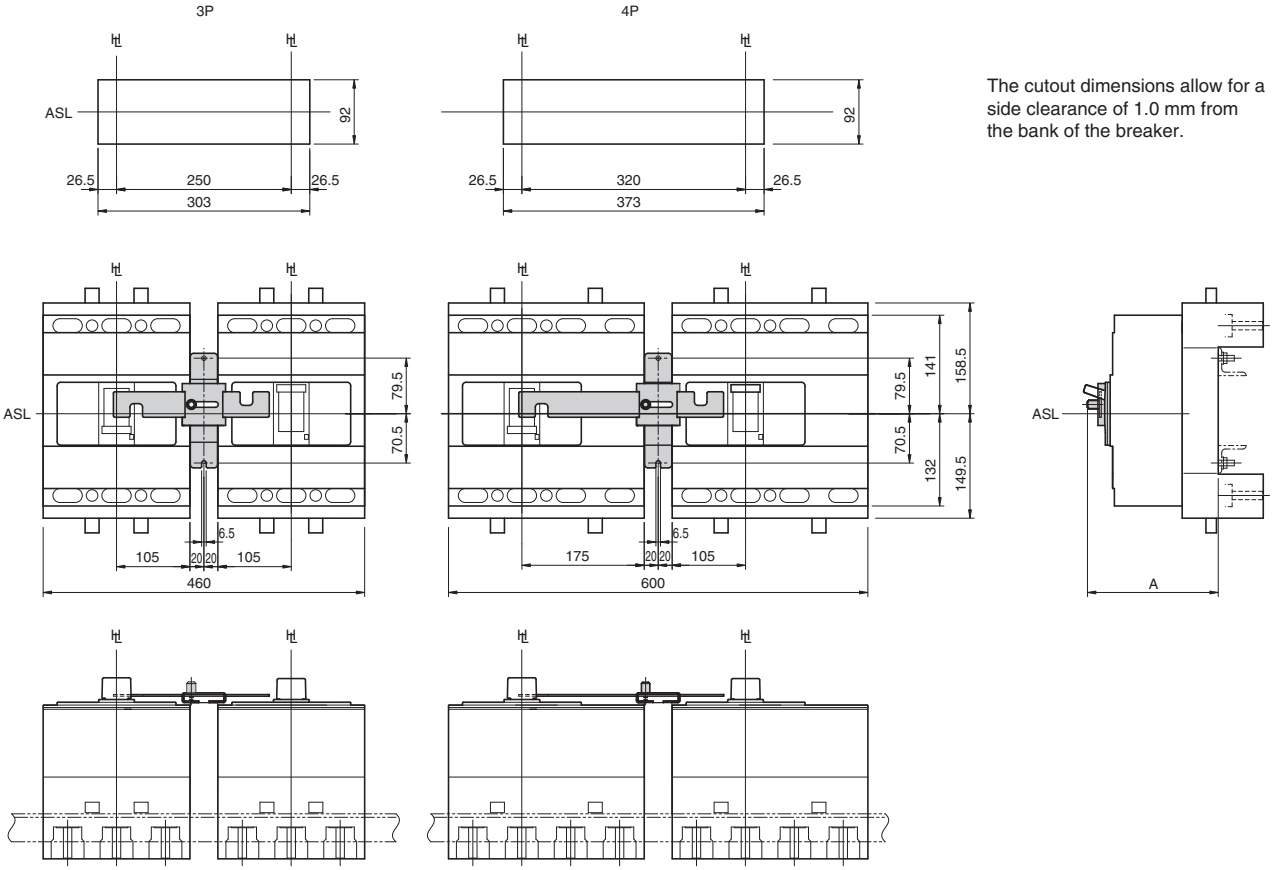

The cutout dimensions allow for a side clearance of 1.0 mm from the bank of the breaker.

Drilling plan (front view)

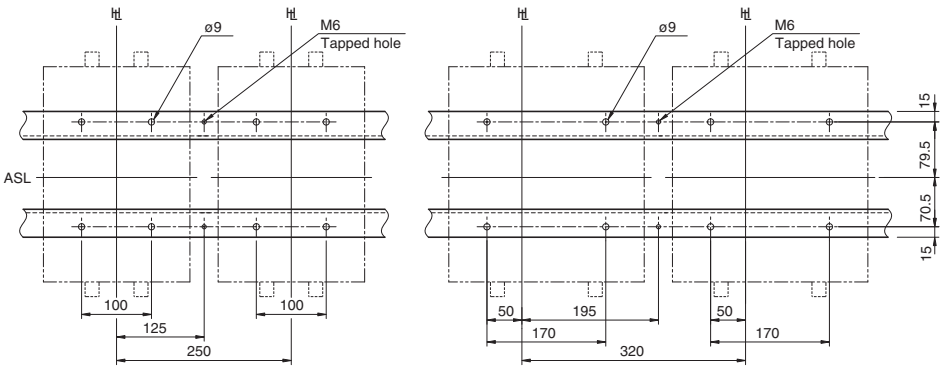

ASL: Arrangement Standard Line
℄: Handle Frame Centre Line
℄: Handle Centre Line

Dimensions mm

Frame size (A)	Types of breakers	Number of poles	Breaker connection method	Interlock Order codes	A
630 800	**S630-CF,S630-NF,S630-RF,S630-PF S630-NE,S630-RE,S630-PE,S630-GN S800-CF,S800-NF,S800-RF,S800-PF S800-NE,S800-RE,S800-PE,S800-NN**	3	PMC	T2MS803SC	153.5
	H630-NE,L630-NE H800-NE,L800-NE	3	PMC	T2MS803LC	190.5

Notes:
(1) The terminal block can not be fitted to the right-hand side of the left breaker and to the left-hand side of the right breaker.
(2) The UVT with time-delay can not be fitted to the left breaker.

Panel cutout (front view)

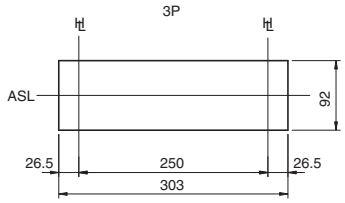

The cutout dimensions allow for a side clearance of 1.0 mm from the bank of the breaker.

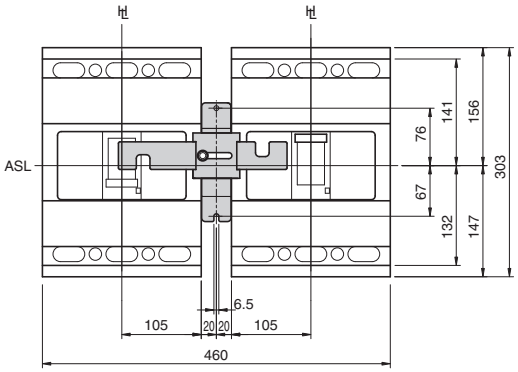

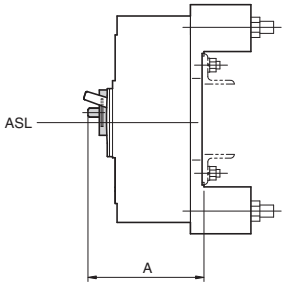

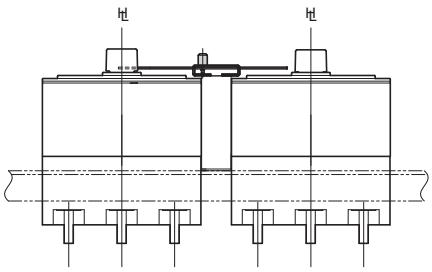

Drilling plan (front view)

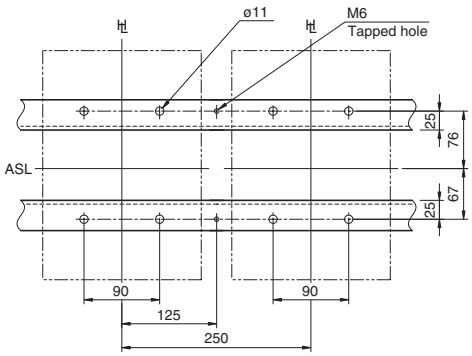

6
Accessories

8. Mechanical interlock

ASL : Arrangement Standard Line
HL : Handle Frame Centre Line
℄ : Handle Centre Line

Dimensions mm

Frame size (A)	Types of molded case circuit breakers	Interlock Order codes	Number of poles	a	b	c	d	e	f	g	h	k	m	ℓ	R
50, 100	**E50-SF,E50-CM,E100-SF**	XLF1 ①②	3	100	150	102	26.5	153	52.5	52.5	105	175	99.6	15	8.5
1000	**TL-1000NE**	XLF9 ①	3	220	340	129	61.5	343	58	74	132	430	179.6	30	8.5
			4	290	410	129	61.5	413	58	74	132	570	179.6	30	8.5
1200	**TL-1200NE**	XLF9 ①	3	220	340	129	61.5	343	58	74	132	430	179.6	30	8.5
			4	290	410	129	61.5	413	58	74	132	570	179.6	30	8.5
1250	**S1250-NE,S1250-GE S1250-NN**	T2MSX63SF	3	220	340	124.5	61.5	343	53.5	74	127.5	430	159.2	30	8.5
		T2MSX64SF	4	290	410	124.5	61.5	413	53.5	74	127.5	570	159.2	30	8.5
1600	**S1600-NE,S1600-NN**	T2MSX63SF	3	220	340	124.5	61.5	343	53.5	74	127.5	430	179.2	30	8.5
		T2MSX64SF	4	290	410	124.5	61.5	413	53.5	74	127.5	570	179.2	30	8.5
2000	**XS2000NE,XS2000NN**	XLF10 ①	3	Contact us for the detailed dimensions.											
			4												

Notes:
① : Please order with the breakers.
② : When you use with the terminal covers the special terminal covers are needed. Please specify the special terminal covers when necessary.
(1) The terminal block can not be fitted to the right-hand side of the left breaker and to the left-hand side of the right breaker.
(2) The UVT controller or the OCR controller may be required to be installed external to the breaker.
(3) See the outline dimensions of the breaker for the drilling plan.

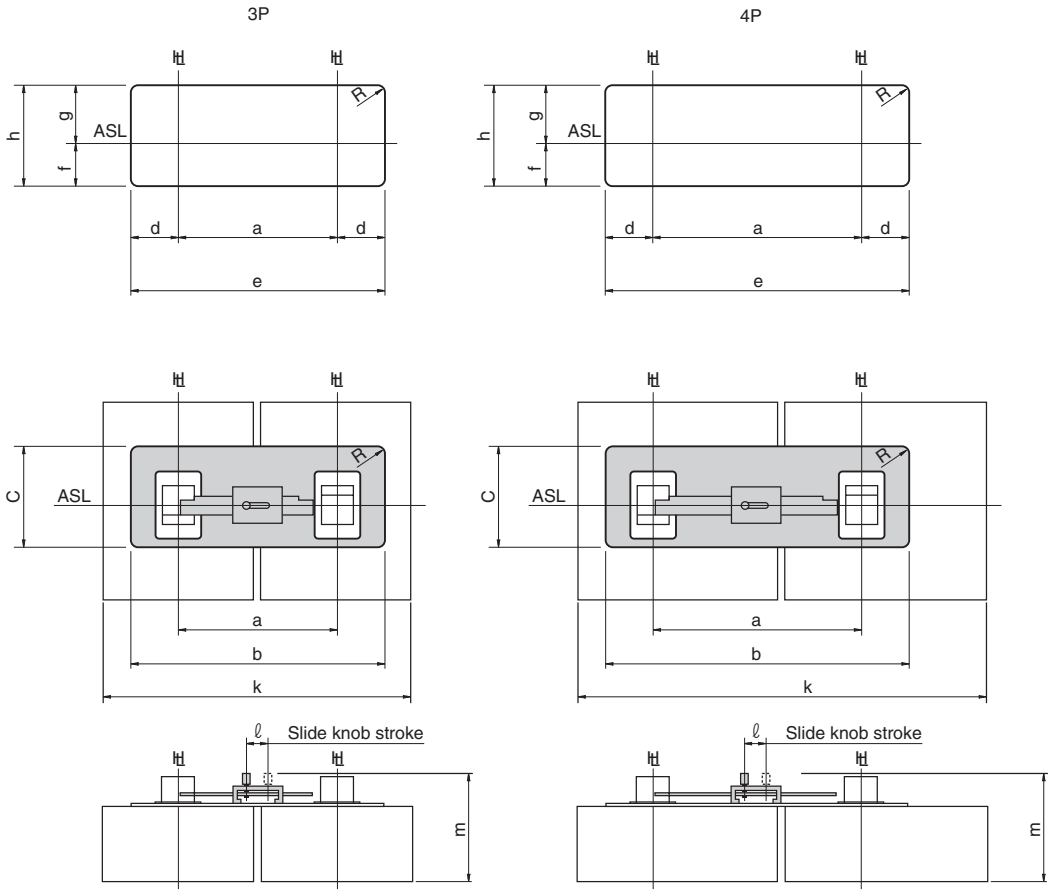

9. Terminal blocks (TF)

18mm width 6 terminals

Vertical leading type (T2TF00L) with 50/100/125A frame MCCB

Mounting position/typical terminal arrangement

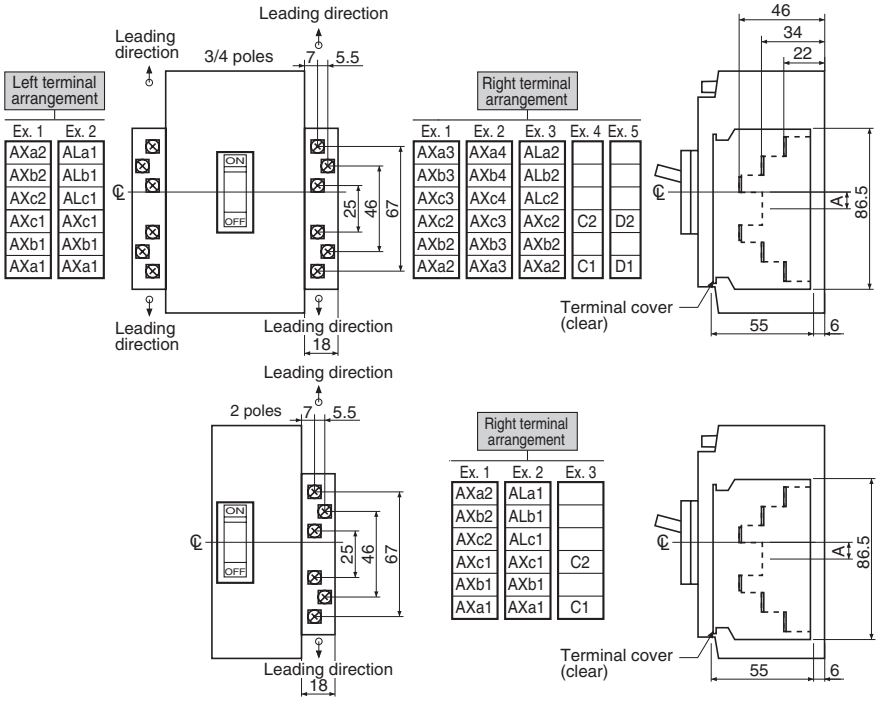

Dimensions, mm

Frame size (A)	Types of breakers	A
50	**S50-SF** (2/3 poles)	9
100, 125	**S125-SF** (2/3/4 poles) **S125-SN** (3/4 poles)	9

Notes:
1) Tightening torque of M3.5 terminal screws: 0.9 – 1.2 N • m
2) Applicable wire size: 2.0mm² max

Combination of terminal arrangement (for 3 poles/4 poles)

AX	AL	SH	UV	Left terminal	Right terminal
1C	1C	1	—	Ex.2	Ex.4
1C	1C	—	1	Ex.2	Ex.5
1C	2C	—	—	Ex.2	Ex.3
2C	—	1	—	Ex.1	Ex.4
2C	—	—	1	Ex.1	Ex.5
2C	2C	—	—	Ex.2	Ex.3
3C	1C	—	—	Ex.2	Ex.1
4C	—	—	—	Ex.1	Ex.2

AX, AL takes precedence left terminal connection.
AL is connected to the left terminal in preference to the AX.
Contact TERASAKI for the combination other than the above.

18mm width 6 terminals

Vertical leading type (T2TFX0) with 50/100/125A frame MCCB

Mounting position/typical terminal arrangement

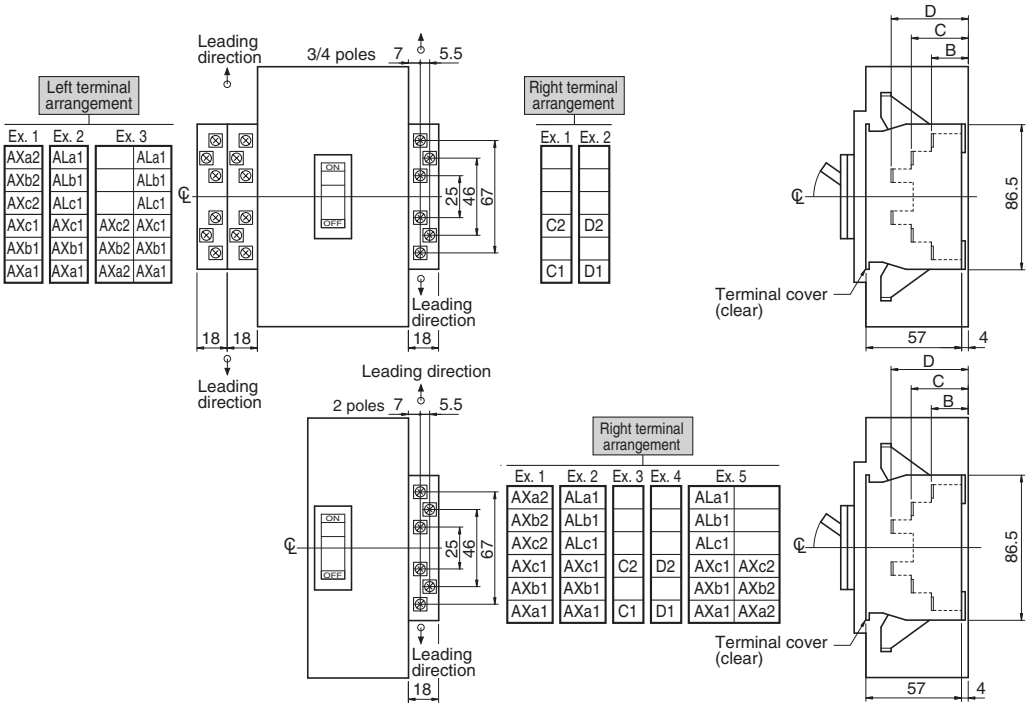

Dimensions, mm

Frame size (A)	Types of breakers MCCB	B	C	D
50	**S50-GF**	22	34	46
100, 125	**S100, S125-NF, S125-GF, S125-NN**	22	34	46

Notes:
1) Tightening torque of M3.5 terminal screws: 0.9 – 1.2 N • m
2) Applicable wire size: 2.0mm² max

9. Terminal blocks (TF)

18mm width 6 terminals
Vertical leading type (T2TFX0) with 100/125/225/250A frame MCCB

Mounting position/typical terminal arrangement

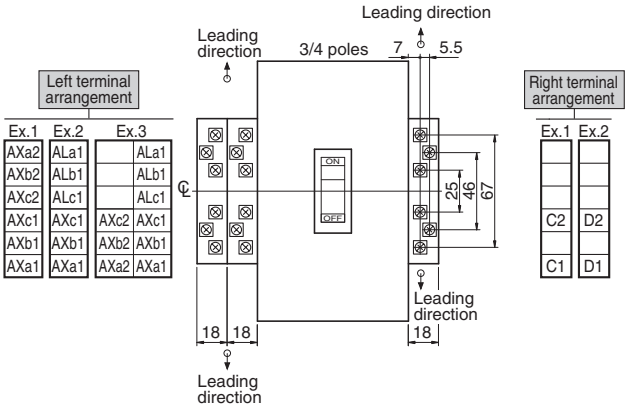

Dimensions, mm

Frame size (A)	Types of breakers MCCB	B	C	D	E
100, 125	**H100, L100, H125, L125**	57	69	81	39
225, 250	**S225-NF, S225-GF, S250-NF, S250-GF, S225-NM**	22	34	46	4
	H225, L225, S225-GE	57	69	81	39

Notes:
1) Tightening torque of M3.5 terminal screws: 0.9 – 1.2 N • m
2) Applicable wire size: 2.0mm² max

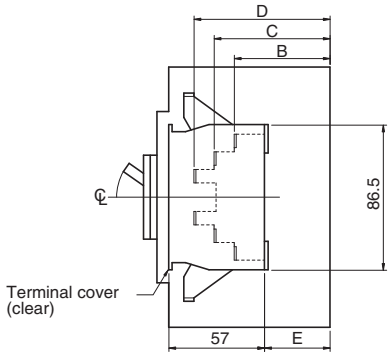

18mm width 6 terminals
Vertical leading type (T2TF00L) with 225/250A frame MCCB

Mounting position/typical terminal arrangement

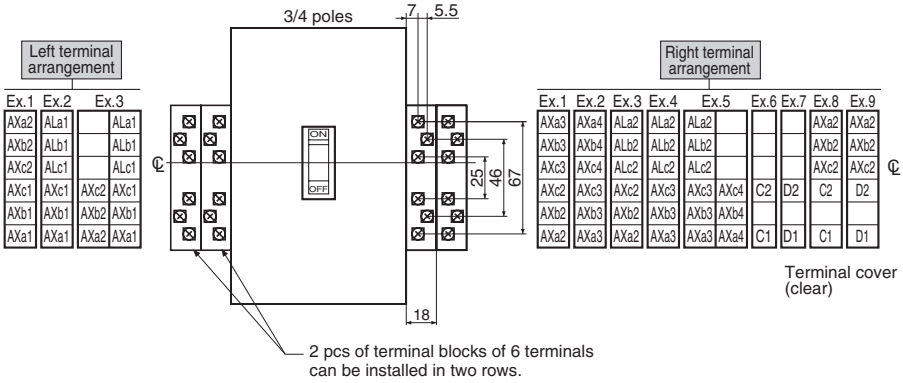

Dimensions, mm

Frame size (A)	Types of breakers	A
225, 250	**E250-SF** (3 poles)	7
	S250-SF, S250-SN (3/4 poles)	7

Notes:
1) Tightening torque of M3.5 terminal screws: 0.9 – 1.2 N • m
2) Applicable wire size: 2.0mm² max

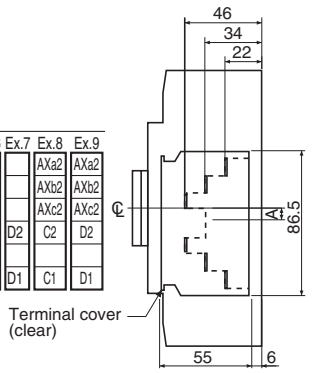

Combination of terminal arrangement

AX	AL	SH	UV	Left terminal	Right terminal
1C	1C	1	—	Ex.2	Ex.6
1C	1C	—	1	Ex.2	Ex.7
2C	—	1	—	Ex.1	Ex.6
2C	—	—	1	Ex.1	Ex.7
2C	2C	—	—	Ex.2	Ex.3
2C	1C	1	—	Ex.2	Ex.8
2C	1C	—	1	Ex.2	Ex.9
3C	1C	—	—	Ex.2	Ex.1
3C	2C	—	—	Ex.3	Ex.4
4C	—	—	—	Ex.1	Ex.2
4C	2C	—	—	Ex.3	Ex.5

AX, AL takes precedence left terminal connection.
AL is connected to the left terminal in preference to the AX.
1 row terminal block is used in preference to 2 rows the terminal blocks.
Contact TERASAKI for the combination other than the above.

18mm width 6 terminals
Vertical leading type (T2TFX0) with 400A frame MCCB

Mounting position/typical terminal arrangement

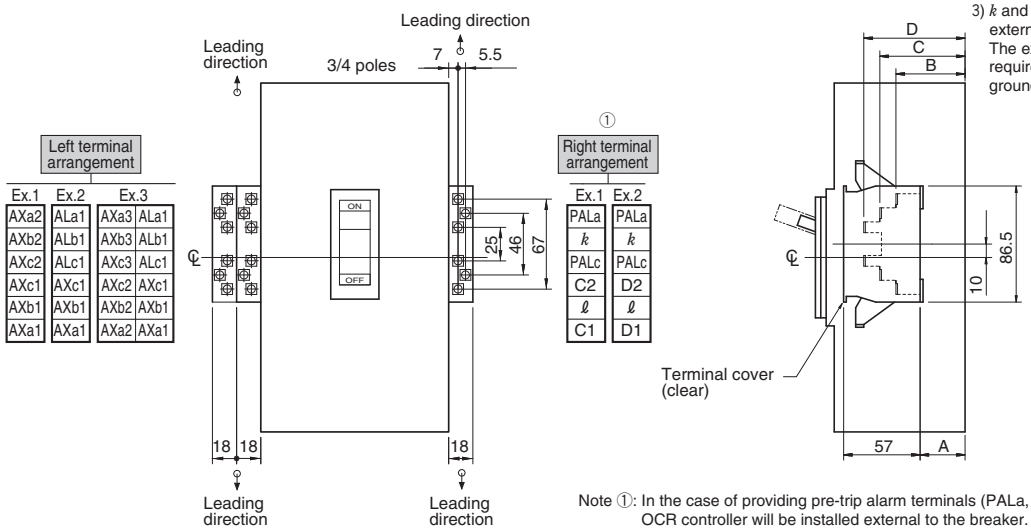

Dimensions, mm

Frame size (A)	Types of breakers MCCB	A	B	C	D
400	**S400**	33.5	51.5	63.5	75.5
	H400, L400	70.5	88.5	100.5	112.5

Notes:
1) Tightening torque of M3.5 terminal screws: 0.9 – 1.2 N • m
2) Applicable wire size: 2.0mm² max
3) *k* and *ℓ* terminals are to be connected to the externally mounted neutral line CT. The externally mounted neutral line CT will be required if you apply a 3-pole breaker with ground fault trip function in the 3-phase 4-wire.

Note ①: In the case of providing pre-trip alarm terminals (PALa, PALc) to the terminal block, OCR controller will be installed external to the breaker.

18mm width 6 terminals
Vertical leading type (T2TFX0) with 630/800A frame MCCB

Mounting position/typical terminal arrangement

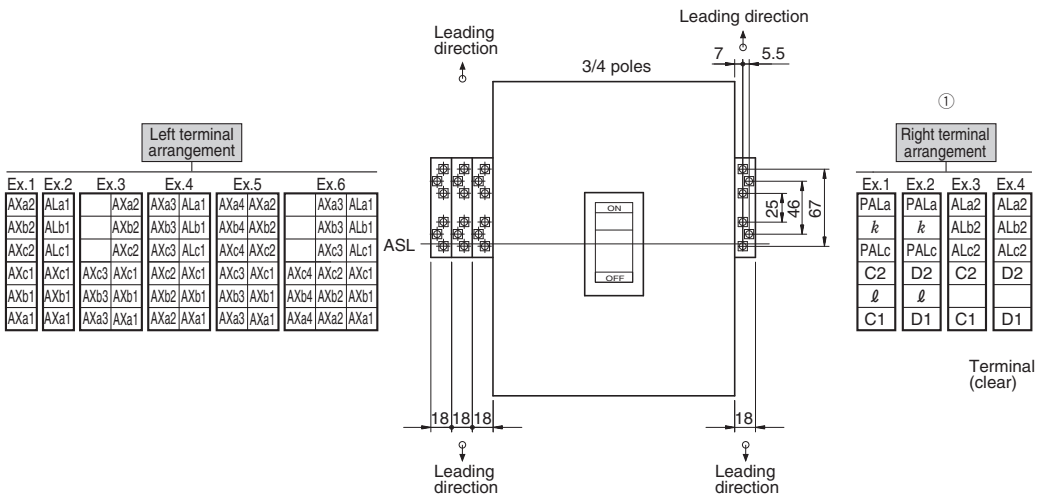

Dimensions, mm

Frame size (A)	Types of breakers MCCB	A	B	C	D
600, 630, 800	**S630, S800**	33.5	51.5	63.5	75.5
	H630, L630, H800, L800	70.5	88.5	100.5	112.5

Notes:
1) Tightening torque of M3.5 terminal screws: 0.9 – 1.2 N • m
2) Applicable wire size: 2.0mm² max
3) *k* and *ℓ* terminals are to be connected to the externally mounted neutral line CT. The externally mounted neutral line CT will be required if you apply a 3-pole breaker with ground fault trip function in the 3-phase 4-wire.

Note ①: In the case of providing pre-trip alarm terminals (PALa, PALc) to the terminal block, OCR controller will be installed external to the breaker.

9. Terminal blocks (TF)

Vertical leading type (LTS) with 50A frame MCCB

Mounting position/typical terminal arrangement

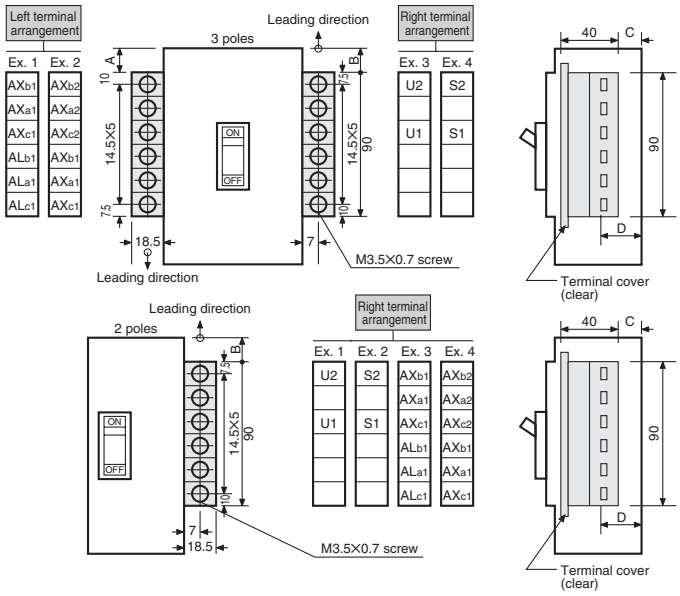

Dimensions, mm

Frame size (A)	Types of breakers	A	B	C	D
50	**E50-SF,E50-CM**	16.5	16.5	21	36

Notes:
1) Tightening torque of M3.5 terminal screws: 0.9 – 1.2 N·m
2) Applicable wire size: 1.25mm² max (Vinyl-coated wire)

Vertical leading type (LTS) with 100A frame MCCB

Mounting position/typical terminal arrangement

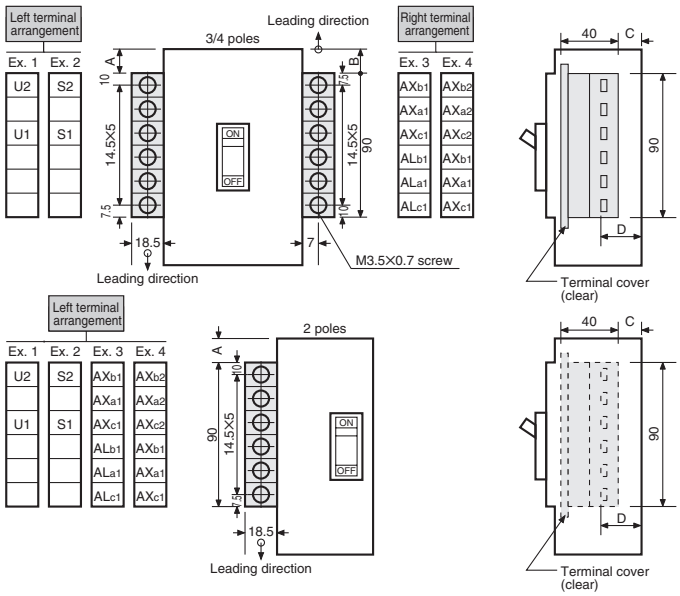

Dimensions, mm

Frame size (A)	Types of breakers	A	B	C	D
100	**E100-SF** ①	16.5	16.5	21	36

Notes:
①: Terminal block cannot be mounted on the breaker which is equipped with the motor operator.
1) Tightening torque of M3.5 terminal screws: 0.9 – 1.2 N·m
2) Applicable wire size: 1.25mm² max (Vinyl-coated wire)

Horizontal leading type (LTF) with 1250/1600A frame MCCB

Mounting position/typical terminal arrangement

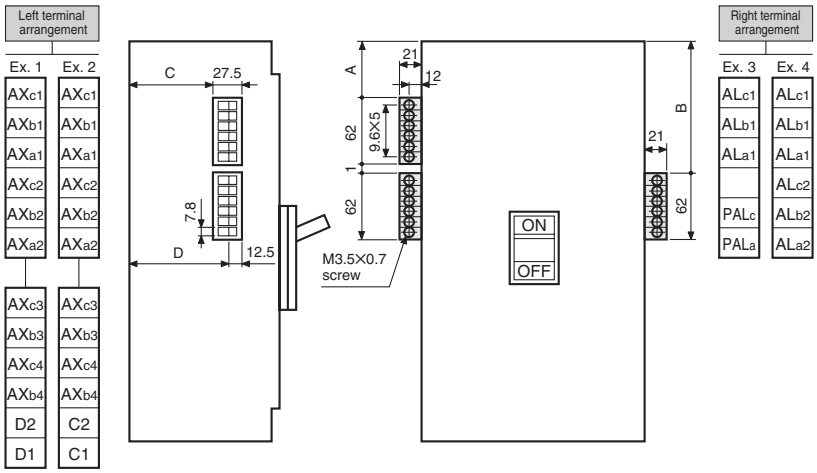

Dimensions, mm

Frame size (A)	Types of breakers	A	B	C	D
1250	**S1250**	51	114 (124)	57	72
1600	**S1600**	51	114 (124)	77	92

Notes:
1) Values in parentheses applies to 4-pole breakers.
2) Tightening torque of M3.5 terminal screws: 0.9 – 1.2 N·m
3) Applicable wire size: 2.0mm² max x 2

Horizontal leading type (LTF) with 1000 to 2000A frame MCCB

Mounting position/typical terminal arrangement

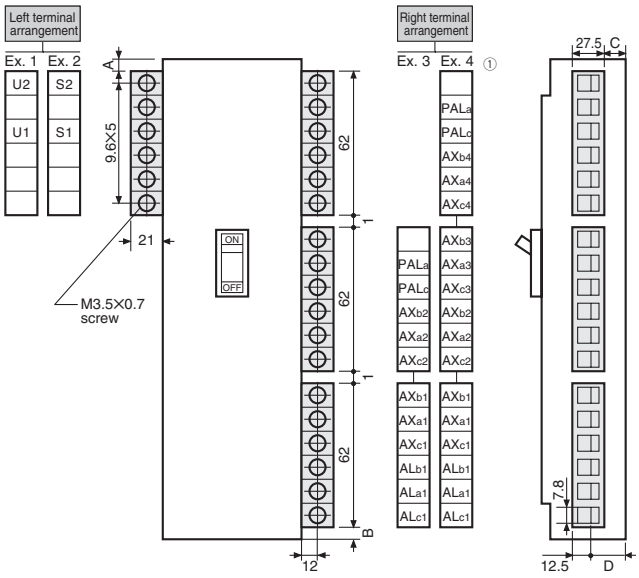

Dimensions, mm

Frame size (A)	Types of breakers	A	B	C	D
1000	**TL-1000NE**	51	194 (184)	77	92
1200	**TL-1200NE**	51	194 (184)	77	92
2000	**XS2000NE,XS2000NN**	54	208	100	115

Notes:
①: The terminal arrangement Ex.4 shown in the figure applies to type XS2000NE breakers only.
1) Values in parentheses applies to 4-pole breakers.
2) Tightening torque of M3.5 terminal screws: 0.9 – 1.2 N·m
3) Applicable wire size: 2.0mm² max x 2

10. Door Flange (D.F)

Door flanges are recommended to be used to cover the cutout of a switchboard panel.

Fig. 1

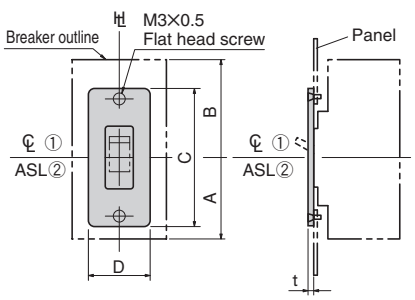

Fig. 2

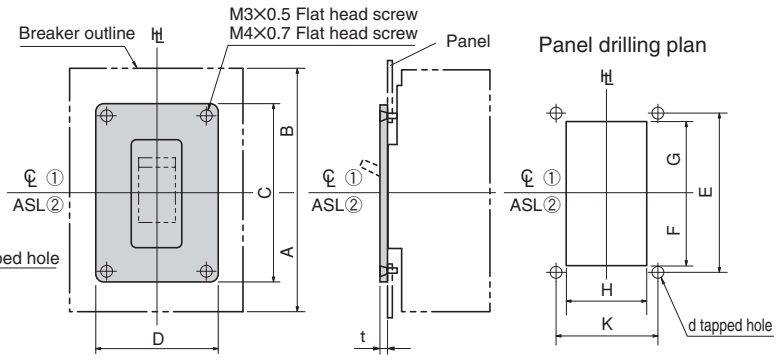

Dimensions mm

Frame size (A)	Types of breakers	Order codes	Fig.	A	B	C	D	E	F		G		H		K	d	t
									Min	Max	Min	Max	Min	Max			
50	**E50-SF,E50-CM**	XAA1	1②	65	65	105	50	92	37	42	37	42	32	45	—	M3×0.5	3
	S50-SF	T2DF25	1①	65	65	105	50	92	37	42	37	42	32	45	—	M3×0.5	2
	S50-GF	T2DF25	1①	77.5	77.5	105	50	92	37	42	37	42	32	45	—	M3×0.5	2
100	**E100-SF**	XAA1	1②	65	65	105	50	92	37	42	37	42	32	45	—	M3×0.5	3
	S100-NF,S100-GF S100-NM,S100-NN	T2DF25	1①	77.5	77.5	105	50	92	37	42	37	42	32	45	—	M3×0.5	2
	H100-NF,L100-NF	T2DF25	1①	82.5	82.5	105	50	92	37	42	37	42	32	45	—	M3×0.5	2
125	**S125-SF,S125-SN**	T2DF25	1①	65	65	105	50	92	37	42	37	42	32	45	—	M3×0.5	2
	S125-NF,S125-GF S125-NN	T2DF25	1①	77.5	77.5	105	50	92	37	42	37	42	32	45	—	M3×0.5	2
	H125-NF,L125-NF	T2DF25	1①	82.5	82.5	105	50	92	37	42	37	42	32	45	—	M3×0.5	2
225	**S225-NF,S225-GF S225-NM**	T2DF25	1①	82.5	82.5	105	50	92	37	42	37	42	32	45	—	M3×0.5	2
	S225-GE H225-NF,L225-NF	T2DF25	1①	82.5	82.5	105	50	92	37	42	37	42	32	45	—	M3×0.5	2
250	**E250-SF,S250-SF S250-SN S250-NF,S250-GF**	T2DF25	1①	82.5	82.5	105	50	92	37	42	37	42	32	45	—	M3×0.5	2
400	**S400-CF,S400-NF S400-GF S400-NE,S400-GE S400-PF,S400-PE S400-NN**	T2DF40	2①	130	130	135	95	120	48	56	48	56	57	90	80	M3×0.5	2
	H400-NE,L400-NE	T2DF40	2①	130	130	135	95	120	48	56	48	56	57	90	80	M3×0.5	2
630	**S630-CF,S630-NF S630-RF,S630-NE S630-RE,S630-GN**	T2DF40	2②	132	141	135	95	120	48	56	48	56	57	90	80	M3×0.5	2
	H630-NE,L630-NE	T2DF40	2②	132	141	135	95	120	48	56	48	56	57	90	80	M3×0.5	2
800	**S800-CF,S800-NF S800-RF,S800-NE S800-RE,S800-NN**	T2DF40	2②	132	141	135	95	120	48	56	48	56	57	90	80	M3×0.5	2
	H800-NE,L800-NE	T2DF40	2②	132	141	135	95	120	48	56	48	56	57	90	80	M3×0.5	2
1000	**TL-1000NE**	TAA5	2②	170	200	150	120	135	51	63.5	51	63.5	85	115	80	M3×0.5	5
1200	**TL-1200NE**	TAA5	2②	170	200	150	120	135	51	63.5	51	63.5	85	115	80	M3×0.5	5
1250	**S1250-NE,S1250-GE S1250-NN**	T2DFX6	2②	170	200	150	120	135	51	63.5	51	63.5	85	115	80	M3×0.5	2
1600	**S1600-NE,S1600-NN**	T2DFX6	2②	170	200	150	120	135	51	63.5	51	63.5	85	115	80	M3×0.5	2
2000	**XS2000NE,XS2000NN**	TAA-10	2②	193	257	200	175	175	74	83.5	74	83.5	123	170	150	M4×0.7	5

Notes:
① : ℄ Handle centre line is applied.
② : ASL Arrangement standard line is applied.

7 Characteristics and Outline Dimensions

Molded Case Circuit Breakers

Motor operators

Molded Case Circuit Breakers (50A Frame)

E50-SF

Ratings and Specifications

Type			E50-SF	
Number of poles			2	3
■Ratings				
Rated current, A			10	40
Calibrated at 45°C			15	50
			20	
			30	
Rated insulation voltage〔U_i〕 V			690	
Rated impulse withstand voltage〔U_{imp}〕 kV			6	
■Rated breaking capacity, kA				
NK	AC	690V	—	
I_{cu}/I_{cs}(sym)		450V	10/— ⑬	
		240V	25/— ⑭	
	① DC	250V	7.5/— ㉗	
IEC60947-2	AC	690V	—	
I_{cu}/I_{cs}(sym)		500V	7.5/3.8	
		440V	10/5	
		415V	10/5	
		380V	16/8	
		240V	25/13	
	① DC	250V	7.5/3.8 ㉗	
		125V	15/7.5 ㉗	
■Rated short time withstand current, kA			—	
Weight (◉ marked standard type) kg			0.48	0.74
■Connections and Mountings				
Front-connected (FC)	Terminal screws		◉	
	With extension bars		—	
Rear-connected (RC)	Bolt studs		○	
	Flat bar studs		—	
Plug-in (PM) For switchboards	Standard (PMC)		○	
	High-performance (PMB)		—	
For distribution boards (PMC)			○	
Flush-mounted (FP)			○ Bolt studs	
Draw-out type (DR)			—	
TemPlug70 (PG)			—	
TemPlug45B (PG4)			—	
DIN rail mount			—	
Clip-in chassis mount			—	
■Accessories (optional)		**Symbol**		
Externally mounted: Motor operator		M C	—	●
External operating handle: Breaker-mounted		H B	—	●
External operating handle: Door-mounted (variable depth)		H P	—	●
Toggle extension		H A	—	
Mechanical interlock Slide type		M S	—	●
Toggle holder		H H	●	
Toggle lock		H L	●	
Terminal cover	For front-connected	C F	●	
	For rear-connected and plug-in	C R	●	
Interpole barrier		B A	●	
Terminal block for lead		T F	●	
Door flange		D F	●	
■Standard specifications				
Overcurrent trip mechanism			Thermal-magnetic⑦	
Trip button (color)			Yes (Red)	
Handle position indication (ON: Red, OFF: Green)			Yes	
Suitability for isolation			Non	
CE marking			Non	

Notes:
◉ : Standard. This configuration used unless otherwise specified. ○ : Optional standard. Specify when ordering.
● : "yes" or "available". — : "no" or "not available". ① : DC rating available on request.
⑦ : Hydraulic-magnetic type for below 10A rating. ⑬ : at 500V AC. ⑭ : at 250V AC. ㉗ : Applicable to only 2 poles breakers.

Time/Current characteristic curves

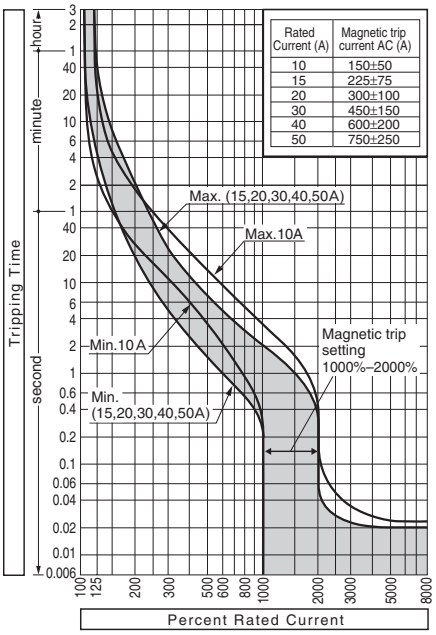

Ambient Compensating Curves

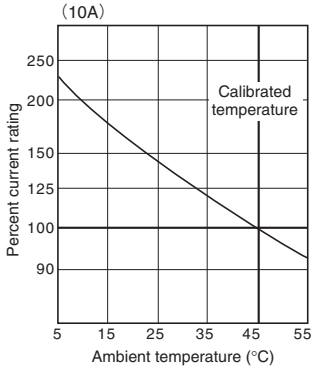

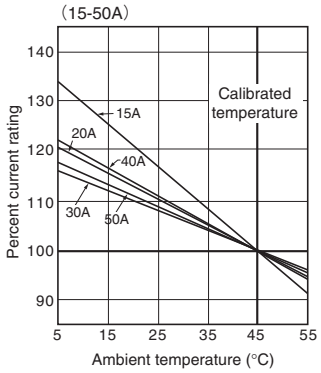

Combinations of Internally Mounted Accessories (Optional)

Poles	AX	AL	SH	UV	AX–AL	AX–SH	AX–UV	AL–SH	AL–UV	AX–AL–SH	AX–AL–UV
	Auxiliary switch	Alarm switch	Shunt trip	Under voltage trip ✻							
3											—

Toggle — Left pole / Right pole

NOTE: 2-pole type breaker may incorporate only one combination of AX (max.2C), AL, SH, UV, AX–AL into the right pole.
NOTE: ✻ The UV Controller is installed externally when provided with AC UV.

Outline dimensions (mm) E50-SF

Front-connected

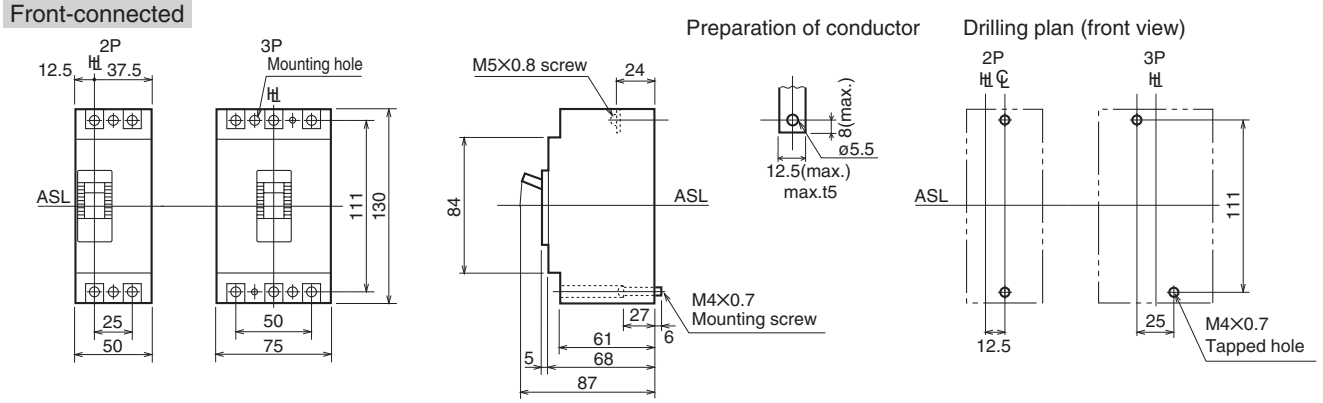

Rear-connected

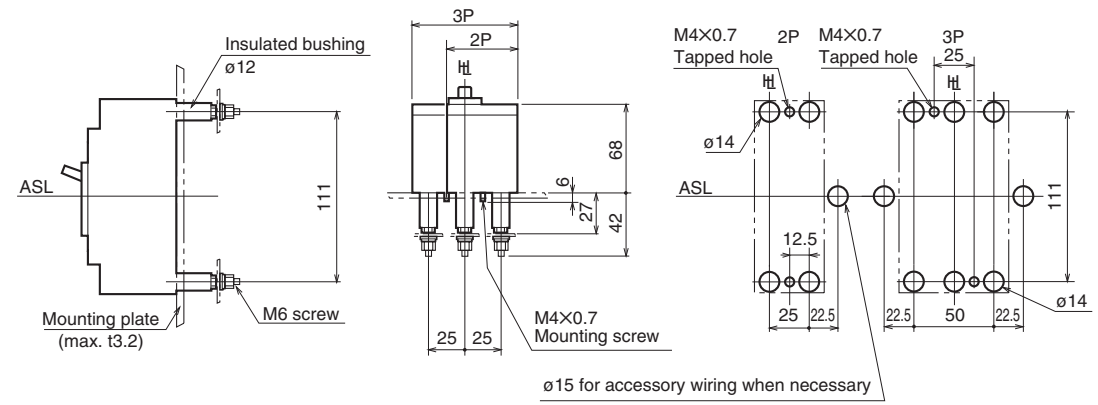

Panel cutout (front view)

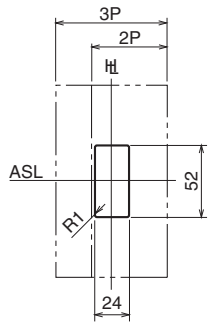

Panel cutout dimensions shown give an allowance of 1.0mm around the handle escutcheon.

Plug-in (Standard)

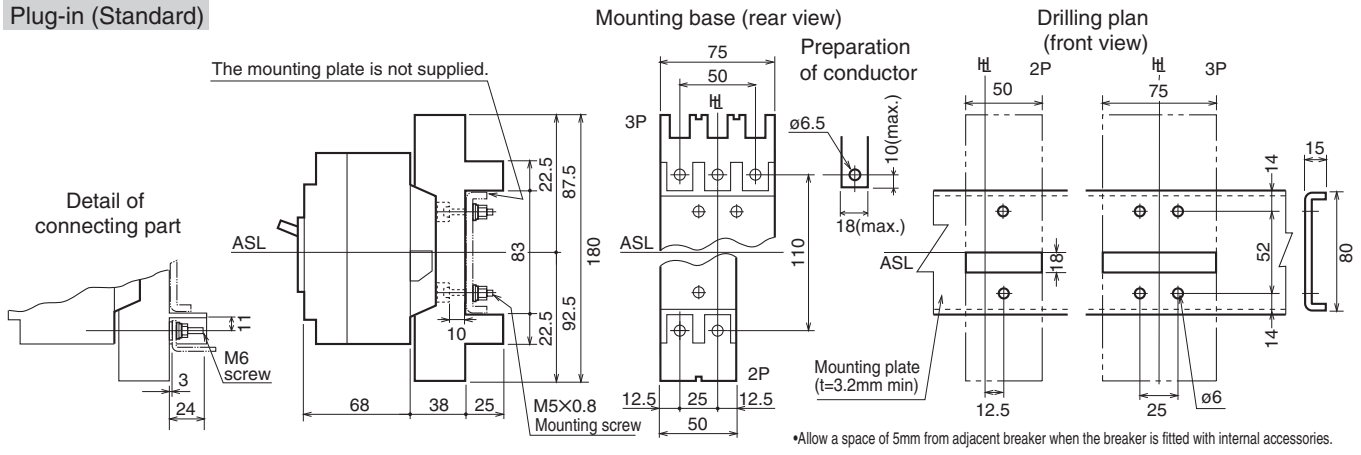

•Allow a space of 5mm from adjacent breaker when the breaker is fitted with internal accessories.

Flush-mounted

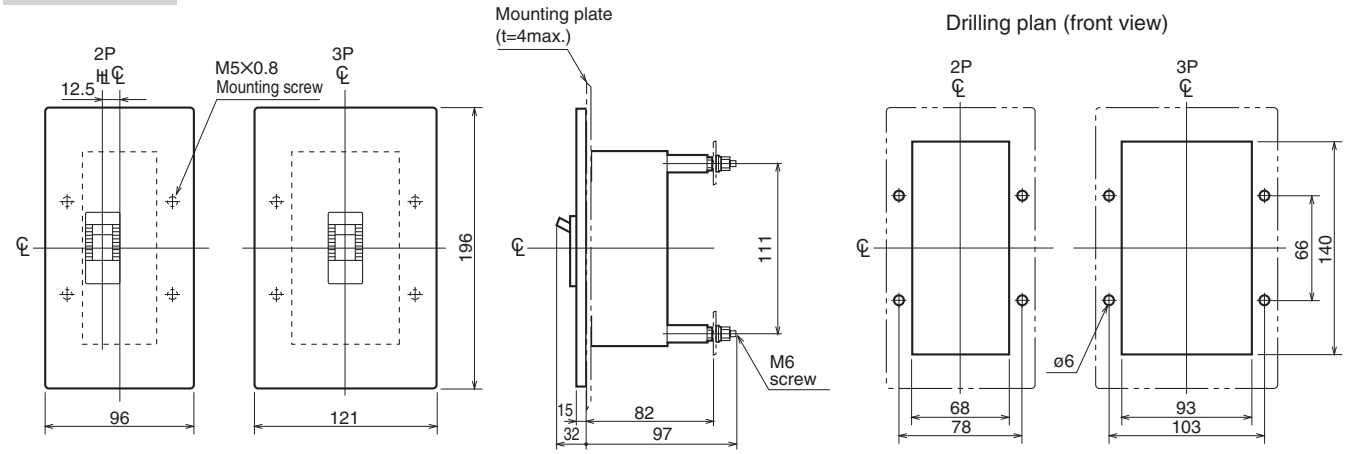

7 Characteristics and Outline Dimensions *TemBreak2*

Molded Case Circuit Breakers (100A Frame)

E100-SF

Ratings and Specifications

Type			E100-SF	
Number of poles			2	3
■Ratings				
Rated current, A			10 40 100	
Calibrated at 45°C			15 50	
			20 60	
			30 75	
Rated insulation voltage〔U_i〕 V			690	
Rated impulse withstand voltage〔U_{imp}〕 kV			6	
■Rated breaking capacity, kA				
NK	AC	690V	—	
I_{cu}/I_{cs}(sym)		450V	10/— ⑬	
		240V	25/— ⑭	
	① DC	250V	7.5/— ㉗	
IEC60947-2	AC	690V	—	
I_{cu}/I_{cs}(sym)		500V	7.5/3.8	
		440V	10/5	
		415V	10/5	
		380V	16/8	
		240V	25/13	
	① DC	250V	7.5/3.8 ㉗	
		125V	15/7.5 ㉗	
■Rated short time withstand current, kA			—	
Weight (◉ marked standard type) kg			0.48	0.74
■Connections and Mountings				
Front-connected (FC)	Terminal screws		◉	
	With extension bars		—	
Rear-connected (RC)	Bolt studs		○	
	Flat bar studs		—	
Plug-in (PM) For switchboards	Standard (PMC)		○	
	High-performance (PMB)		—	
For distribution boards (PMC)			○	
Flush-mounted (FP)			○ Bolt studs	
Draw-out type (DR)			—	
TemPlug70 (PG)			—	
TemPlug45B (PG4)			—	
DIN rail mount			—	
Clip-in chassis mount			—	
■Accessories (optional)		**Symbol**		
Externally mounted: Motor operator		M C	—	●
External operating handle	Breaker-mounted	H B	—	●
	Door-mounted (variable depth)	H P	—	●
Toggle extension		H A	—	
Mechanical interlock Slide type		M S	—	●
Toggle holder		H H	●	
Toggle lock		H L	●	
Terminal cover	For front-connected	C F	●	
	For rear-connected and plug-in	C R	●	
Interpole barrier		B A	●	
Terminal block for lead		T F	●	
Door flange		D F	●	
■Standard specifications				
Overcurrent trip mechanism			Thermal-magnetic⑦	
Trip button (color)			Yes (Red)	
Handle position indication (ON: Red, OFF: Green)			Yes	
Suitability for isolation			Non	
CE marking			Non	

Notes:
◉ : Standard. This configuration used unless otherwise specified. ○ : Optional standard. Specify when ordering.
● : "yes" or "available". — : "no" or "not available". ① : DC rating available on request.
⑦ : Hydraulic-magnetic type for below 10A rating. ⑬ : at 500V AC. ⑭ : at 250V AC. ㉗ : Applicable to only 2 poles breakers.

Time/Current characteristic curves

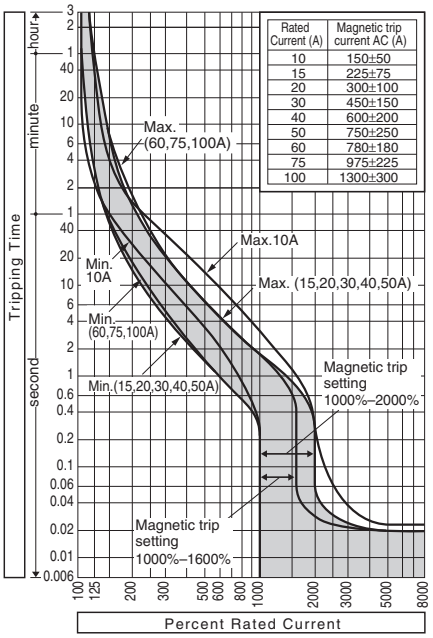

Rated Current (A)	Magnetic trip current AC (A)
10	150±50
15	225±75
20	300±100
30	450±150
40	600±200
50	750±250
60	780±180
75	975±225
100	1300±300

Ambient Compensating Curves

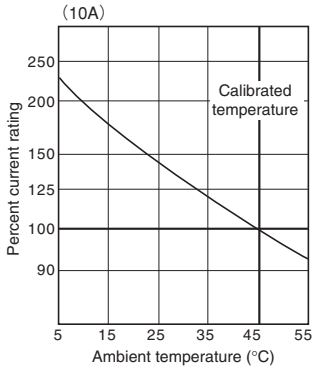

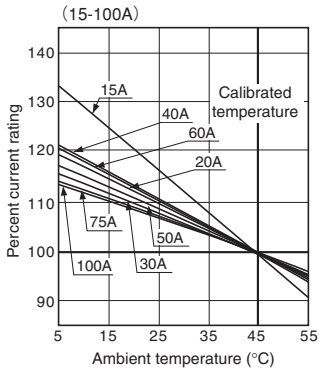

Combinations of Internally Mounted Accessories (Optional)

Poles	AX	AL	SH	UV	AX–AL	AX–SH	AX–UV	AL–SH	AL–UV	AX–AL–SH	AX–AL–UV
	Auxiliary switch	Alarm switch	Shunt trip ✻1	Under voltage trip ✻2							
3											—

Toggle — Left pole / Right pole

NOTE: 2-pole type breaker may incorporate only one combination of AX (max.2C), AL, SH, UV, AX–AL into the left pole.
NOTE: ✻1 Shunt trip is provided with anti-burnout switch.
NOTE: ✻2 The UV Controller is installed externally when provided with AC UV.

Outline dimensions (mm) E100-SF

Front-connected

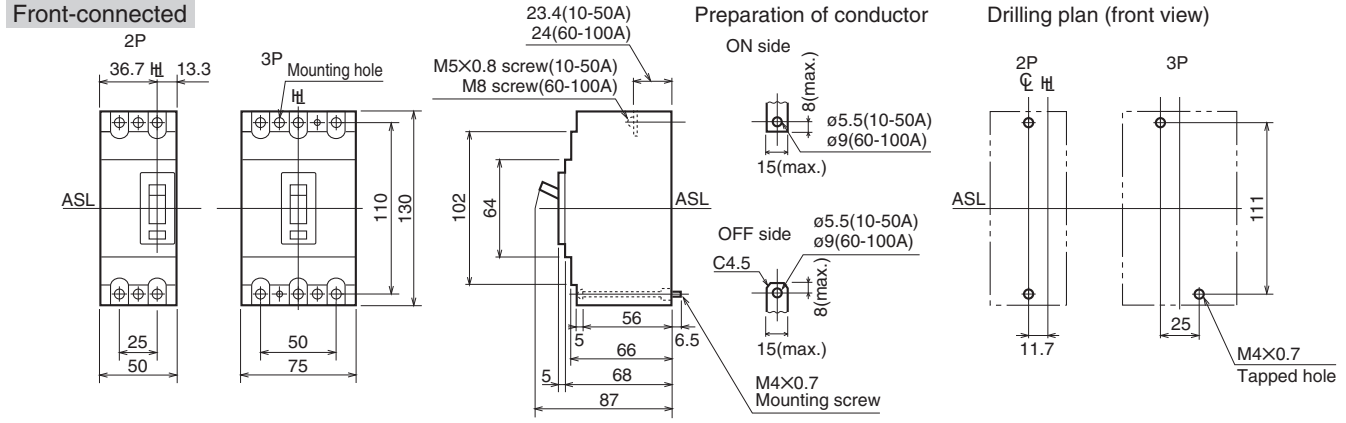

Rear-connected

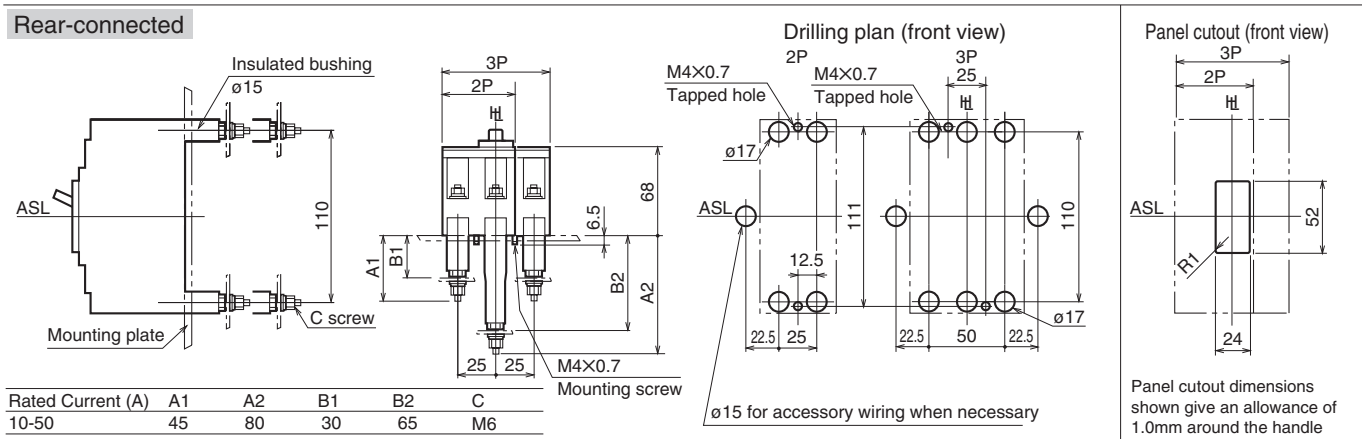

Rated Current (A)	A1	A2	B1	B2	C
10-50	45	80	30	65	M6
60-100	52.1	87.1	32.1	67.1	M8

Panel cutout dimensions shown give an allowance of 1.0mm around the handle escutcheon.

Plug-in (Standard)

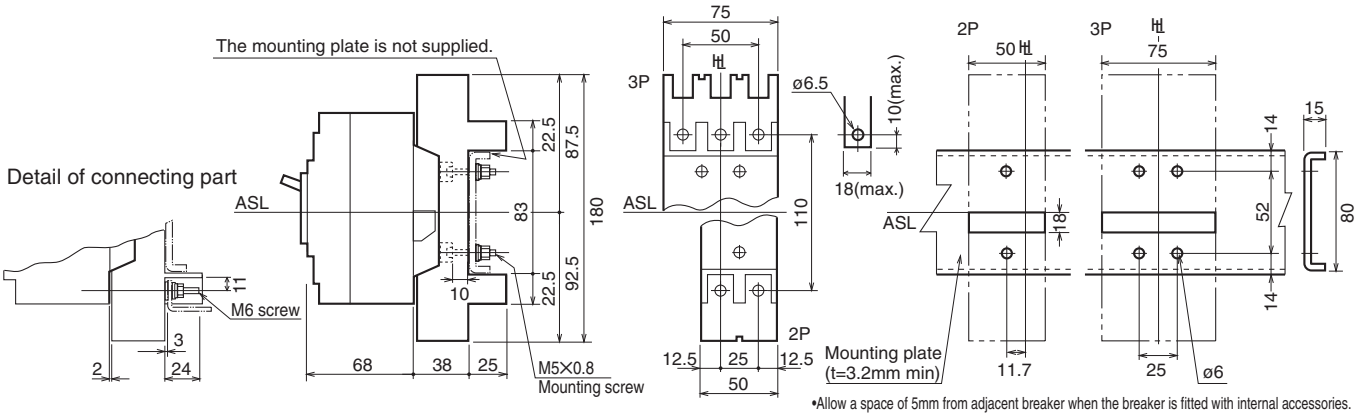

•Allow a space of 5mm from adjacent breaker when the breaker is fitted with internal accessories.

Flush-mounted

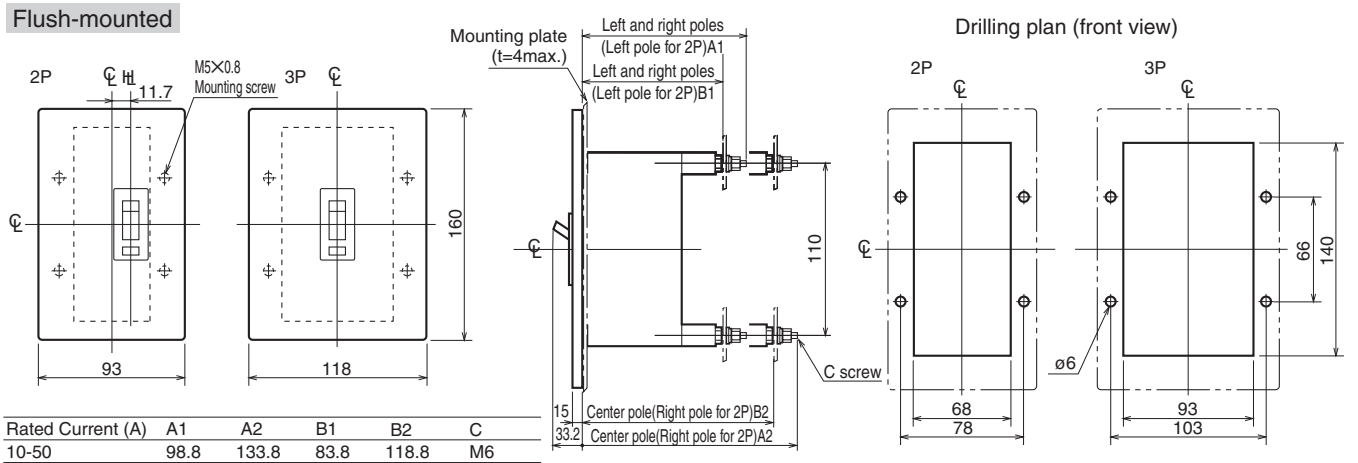

Rated Current (A)	A1	A2	B1	B2	C
10-50	98.8	133.8	83.8	118.8	M6
60-100	105.9	140.9	85.9	120.9	M8

7 Characteristics and Outline Dimensions *TemBreak2*

Molded Case Circuit Breakers (50A Frame)

S50-SF

Ratings and Specifications

Type			S50-SF				
Number of poles			2	3			
■Ratings							
Rated current, A			15				
Calibrated at 45°C			20				
			30				
			40				
			50				
Rated insulation voltage〔U_i〕 V			690				
Rated impulse withstand voltage〔U_{imp}〕 kV			8				
■Rated breaking capacity, kA							
NK	AC	690V	—				
I_{cu}/I_{cs}(sym)		450V	25/13				
		240V	50/25				
	① DC	250V	25/13 ㉗				
IEC60947-2	AC	690V	6/3				
I_{cu}/I_{cs}(sym)		500V	12/6				
		440V	25/13				
		415V	30/15				
		380V	30/15				
		240V	50/25				
	① DC	250V	25/13 ㉗				
		125V	40/20 ㉗				
■Rated short time withstand current, kA			—				
Weight (◉ marked standard type) kg			0.6	0.8			
■Connections and Mountings							
Front-connected (FC)	Terminal screws		◉				
	With extension bars		○ ㊸				
Rear-connected (RC)	Bolt studs		—				
	Flat bar studs		○				
Plug-in (PM)	For switchboards	Standard (PMC)	—	○			
		High-performance (PMB)	—				
	For distribution boards (PMC)		○ ㊽				
Flush-mounted (FP)	With flat bar studs		○				
Draw-out type (DR)			—				
TemPlug70 (PG)			—				
TemPlug45B (PG4)			—				
DIN rail mount			—	○ ⑪			
Clip-in chassis mount			—				
■Accessories (optional)		**Symbol**					
Externally mounted: Motor operator		M C	—				
External operating handle	Breaker-mounted	H B	—	●			
	Door-mounted (variable depth)	H P	—	●			
Toggle extension		H A	—				
Mechanical interlock	Slide type	M S	—	●			
Toggle holder		H H	●				
Toggle lock		H L	●				
Terminal cover	For front-connected	C F	●				
	For rear-connected and plug-in	C R	●				
Interpole barrier		B A	● ③				
Terminal block for lead		T F	●				
Door flange		D F	●				
■Standard specifications							
Overcurrent trip mechanism			Thermal-magnetic				
Trip button (color)			Yes (Red)				
Handle position indication (ON: Red, OFF: Green)			Yes				
Suitability for isolation			Yes				
CE marking			Yes				

Notes:
◉ : Standard. This configuration used unless otherwise specified. ○ : Optional standard. Specify when ordering.
● : "yes" or "available". — : "no" or "not available". ① : DC rating available on request.
③ : Line side interpole barriers are supplied as standard. (Front connection only) ⑪ : Provided with DIN rail adaptor.
㉗ : Applicable to only 2 poles breakers. ㊸ : For the extension bars, please palce the order separately in parts.
㊽ : Specify PMD when the internal accessories are fitted.

Time/Current characteristic curves

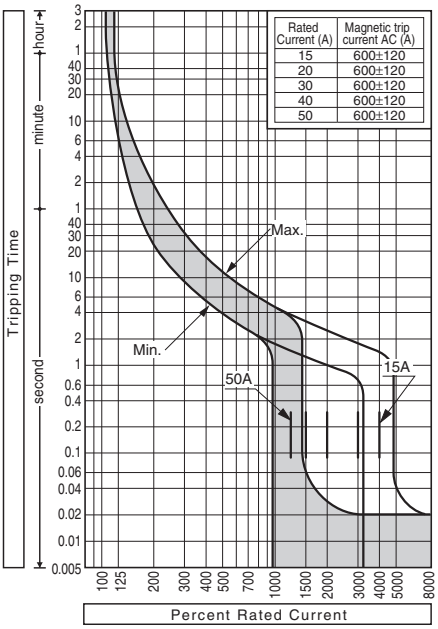

Rated Current (A)	Magnetic trip current AC (A)
15	600±120
20	600±120
30	600±120
40	600±120
50	600±120

Ambient Compensating Curves

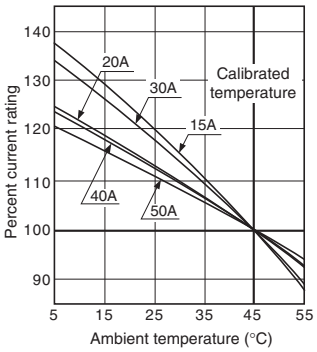

Combinations of Internally Mounted Accessories (Optional)

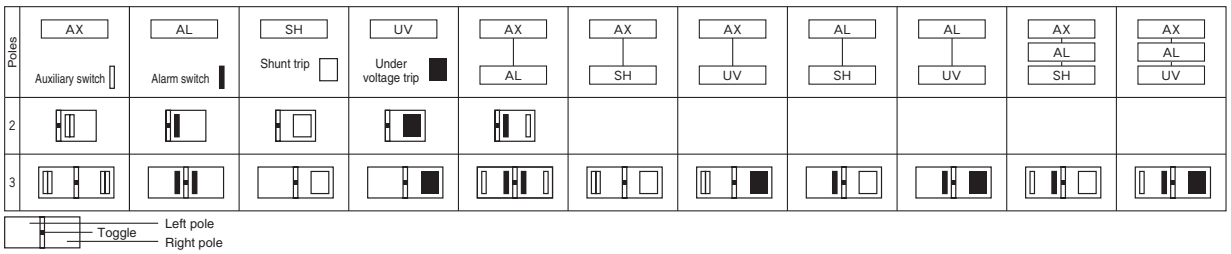

Outline dimensions (mm) S50-SF

Front-connected

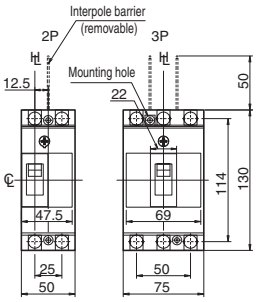

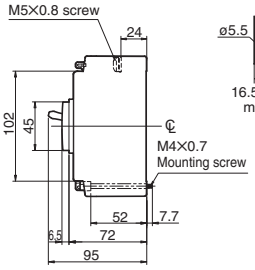

Preparation of conductor

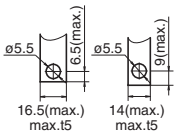

With extension bars (optional)

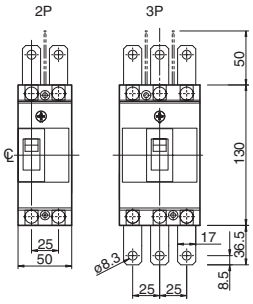

Drilling plan (front view)

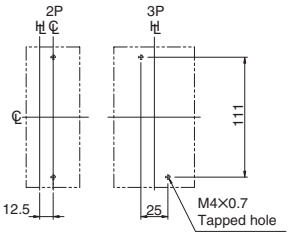

Rear-connected

Detail of connecting part

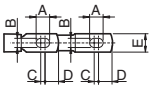

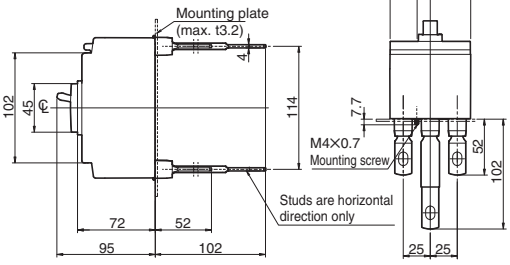

Drilling plan (front view)

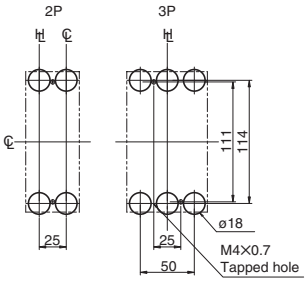

Rated current (A)	A	B	C	D	E
15-50	10.5	6.5	4	13	16

Panel cutout (front view)

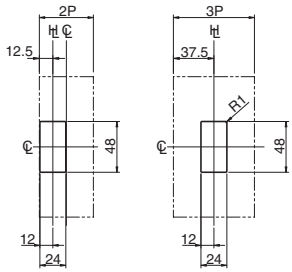

Panel cutout dimensions shown give an allowance of 1.0mm around the handle escutcheon.

Plug-in (Standard)

Detail of connecting part

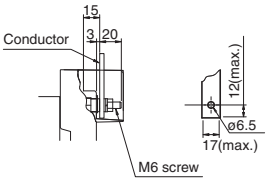

Preparation of conductor

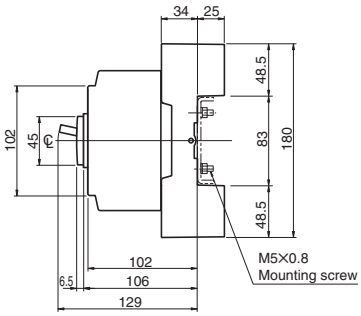

Mounting base (rear view)

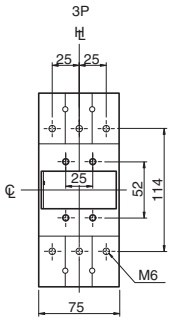

Drilling plan (front view)

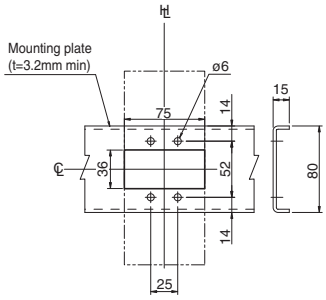

Flush-mounted

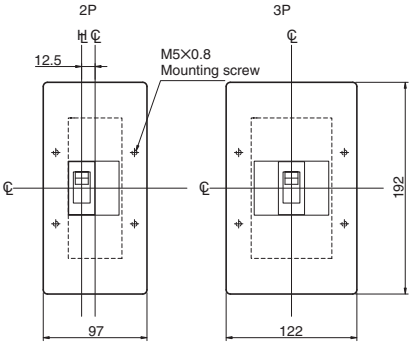

Detail of connecting part

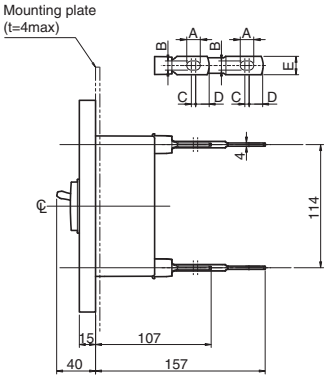

Rated current (A)	A	B	C	D	E
15-50	10.5	6.5	4	13	16

Drilling plan (front view)

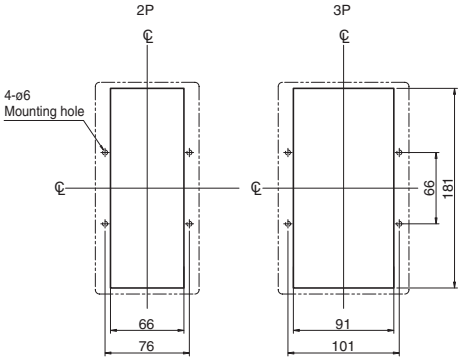

7 Characteristics and Outline Dimensions *TemBreak2*

Molded Case Circuit Breakers (125A Frame)

S125-SF

Ratings and Specifications

Type			S125-SF							
Number of poles			2	3	4	2	3	4		
■Ratings										
Rated current, A			15	50		125				
Calibrated at 45°C			20	60						
			30	75						
			40	100						
Rated insulation voltage〔U_i〕 V			690			690				
Rated impulse withstand voltage〔U_{imp}〕 kV			8			8				
■Rated breaking capacity, kA										
NK	AC	690V	—			—				
I_{cu}/I_{cs}(sym)		450V	25/13			25/13				
		240V	50/25			50/25				
	① DC	250V	25/13 ㉗			25/13 ㉗				
IEC60947-2	AC	690V	6/3			6/3				
I_{cu}/I_{cs}(sym)		500V	12/6			12/6				
		440V	25/13			25/13				
		415V	30/15			30/15				
		380V	30/15			30/15				
		240V	50/25			50/25				
	① DC	250V	25/13 ㉗			25/13 ㉗				
		125V	40/20 ㉗			40/20 ㉗				
■Rated short time withstand current, kA			—			—				
Weight (◉ marked standard type) kg			0.6	0.8	1.0	0.6	0.8	1.0		
■Connections and Mountings										
Front-connected (FC)	Terminal screws		◉			◉				
	With extension bars		○ ㊸			○ ㊸				
Rear-connected (RC)	Bolt studs		—			—				
	Flat bar studs		○			○				
Plug-in (PM) For switchboards	Standard (PMC)		—	○	—	—	○	—		
	High-performance (PMB)		—			—				
	For distribution boards (PMC)		○ ㊽		—	○ ㊽		—		
Flush-mounted (FP) With flat bar studs			○		—	○		—		
Draw-out type (DR)			—			—				
TemPlug70 (PG)			—			—				
TemPlug45B (PG4)			—			—				
DIN rail mount			—	○ ⑪		—	○ ⑪			
Clip-in chassis mount			—			—				
■Accessories (optional)		**Symbol**								
Externally mounted: Motor operator		M C	—			—				
External operating handle	Breaker-mounted	H B	—	●		—	●			
	Door-mounted (variable depth)	H P	—	●		—	●			
Toggle extension		H A	—			—				
Mechanical interlock Slide type		M S	—	●		—	●			
Toggle holder		H H	●			●				
Toggle lock		H L	●			●				
Terminal cover	For front-connected	C F	●			●				
	For rear-connected and plug-in	C R	●			●				
Interpole barrier		B A	● ③			● ③				
Terminal block for lead		T F	●			●				
Door flange		D F	●			●				
■Standard specifications										
Overcurrent trip mechanism			Thermal-magnetic			Thermal-magnetic				
Trip button (color)			Yes (Red)			Yes (Red)				
Handle position indication (ON: Red, OFF: Green)			Yes			Yes				
Suitability for isolation			Yes			Yes				
CE marking			Yes			Yes				

Notes:

◉ : Standard. This configuration used unless otherwise specified. ○ : Optional standard. Specify when ordering.
● : "yes" or "available". — : "no" or "not available". ① : DC rating available on request.
③ : Line side interpole barriers are supplied as standard. (Front connection only) ⑪ : Provided with DIN rail adaptor.
㉗ : Applicable to only 2 poles breakers. ㊸ : For the extension bars, please palce the order separately in parts.
㊽ : Specify PMD when the internal accessories are fitted.

Time/Current characteristic curves

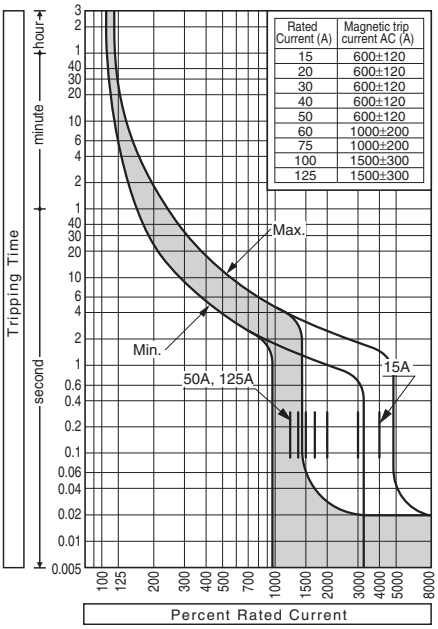

Rated Current (A)	Magnetic trip current AC (A)
15	600±120
20	600±120
30	600±120
40	600±120
50	600±120
60	1000±200
75	1000±200
100	1500±300
125	1500±300

Ambient Compensating Curves

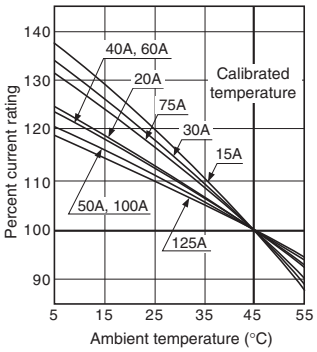

Combinations of Internally Mounted Accessories (Optional)

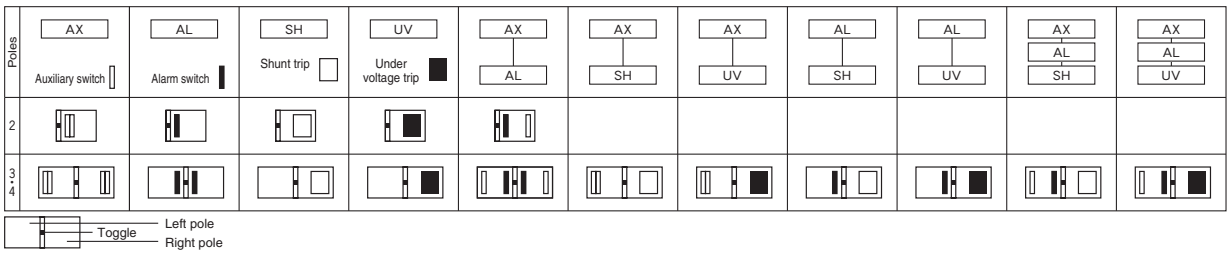

Outline dimensions (mm) S125-SF

Front-connected

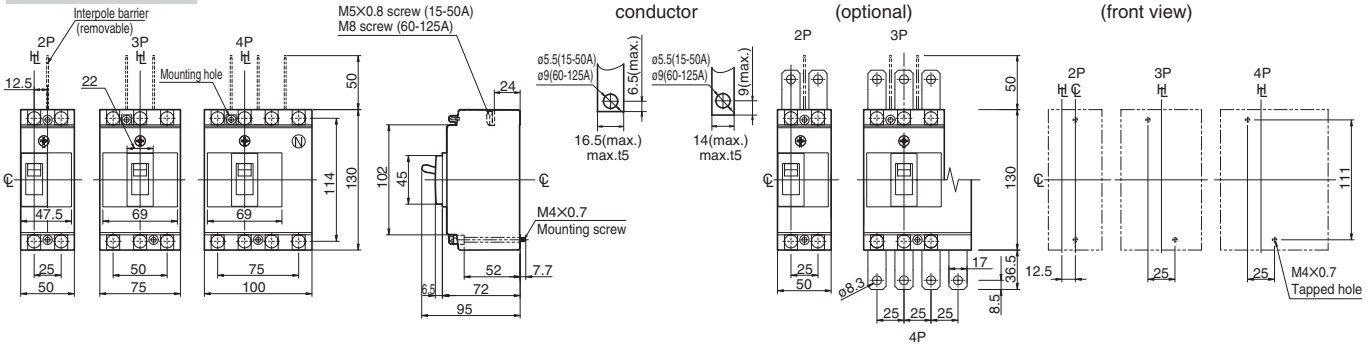

Rear-connected

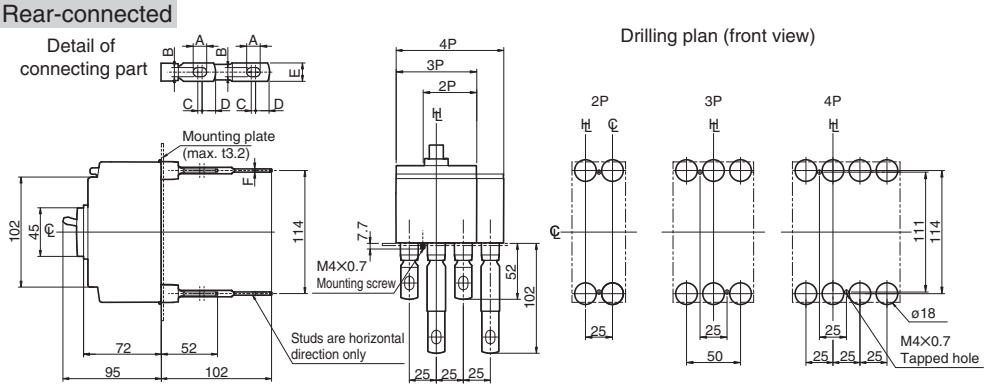

Rated current (A)	A	B	C	D	E	F
15-50	10.5	6.5	4	13	16	4
60-125	12.5	8.5	4	13	16	5

Panel cutout (front view)

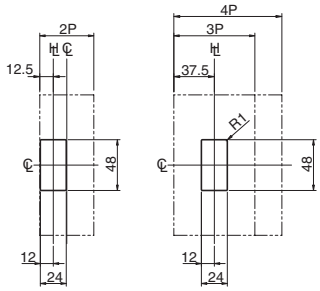

Panel cutout dimensions shown give an allowance of 1.0mm around the handle escutcheon.

Plug-in (Standard)

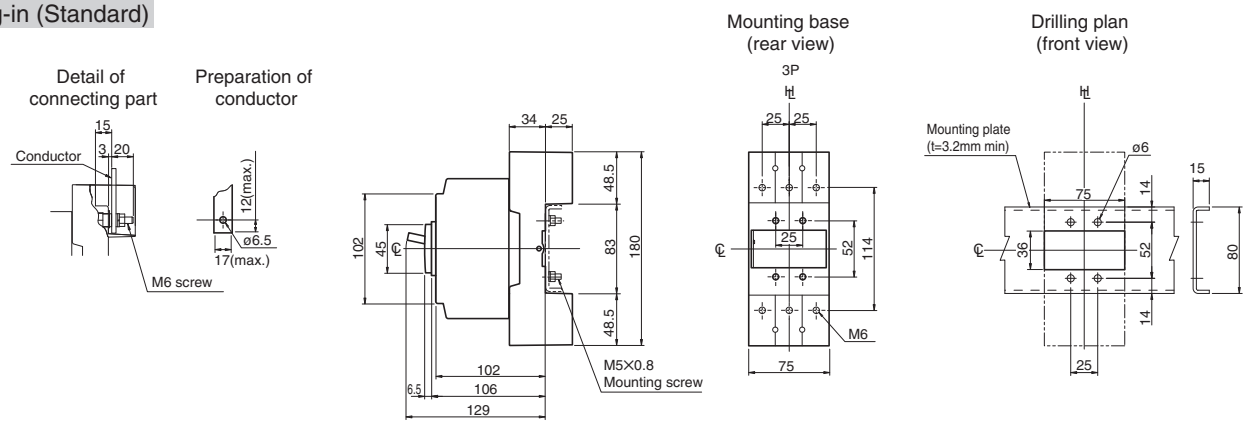

Flush-mounted

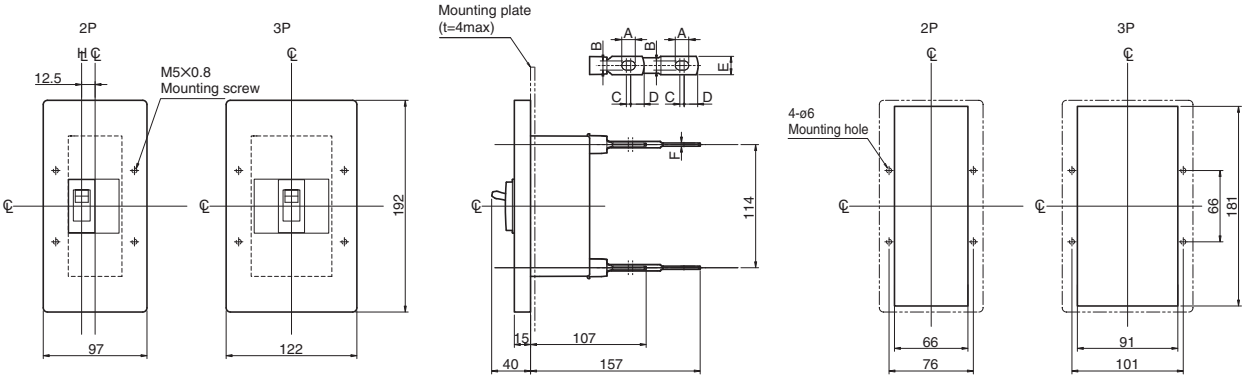

Rated current (A)	A	B	C	D	E	F
15-50	10.5	6.5	4	13	16	4
60-125	12.5	8.5	4	13	16	5

7 Characteristics and Outline Dimensions *TemBreak2*

Molded Case Circuit Breakers (100A・50A Frame)

S100-NF, S50-GF, S100-GF

Ratings and Specifications

Type			S100-NF			S50-GF		S100-GF		
Number of poles			2	3	4	3	4	2	3	4
■Ratings										
Rated current, A			15	50		15		15	60	
Calibrated at 45°C			20	60		20		20	75	
			30	75		30		30	100	
			40	100		40		40		
						50		50		
Rated insulation voltage〔U_i〕 V			690			690		690		
Rated impulse withstand voltage〔U_{imp}〕 kV			8			8		8		
■Rated breaking capacity, kA										
NK	AC	690V	6/6			6/6		6/6		
I_{cu}/I_{cs}(sym)		450V	25/25			50/25		50/25		
		240V	50/50			85/85		85/85		
	① DC	250V	25/19 ㉗			40/40		40/40 ㉗		
IEC60947-2	AC	690V	6/6			6/6		6/6		
I_{cu}/I_{cs}(sym)		500V	22/22			25/22		25/22		
		440V	25/25			50/25		50/25		
		415V	30/30			65/33		65/33		
		380V	30/30			65/33		65/33		
		240V	50/50			85/85		85/85		
	① DC	250V	25/19 ㉗			40/40		40/40 ㉗		
		125V	40/30 ㉗			40/40		40/40 ㉗		
■Rated short time withstand current, kA			—			—		—		
Weight (◉ marked standard type) kg			0.7	1.1	1.4	1.1	1.4	0.7	1.1	1.4
■Connections and Mountings										
Front-connected (FC)	Terminal screws		◉			◉		◉		
	With extension bars		○ ㊸			○ ㊸		○ ㊸		
Rear-connected (RC)	Bolt studs		—			—		—		
	Flat bar studs		○			○		○		
Plug-in (PM) For switchboards	Standard (PMC)		—	○	—	○	—	—	○	—
	High-performance (PMB)		○			○		○		
For distribution boards (PMC)			—	○	—	○	—	—	○	—
Flush-mounted (FP) With flat bar studs			○			○		○		
Draw-out type (DR)			—			—		—		
TemPlug70 (PG)			—	○	—	○	—	○	○	—
TemPlug45B (PG4)			—			—		—		
DIN rail mount			—	○ ⑪		○ ⑪		—	○ ⑪	
Clip-in chassis mount			—			—		—		
■Accessories (optional)		**Symbol**								
Externally mounted: Motor operator		M C	—	●		●		—	●	
External operating handle	Breaker-mounted	H B	—	●		●		—	●	
	Door-mounted (variable depth)	H P	—	●		●		—	●	
Toggle extension		H A	—			—		—		
Mechanical interlock Slide type		M S	—	●		●		—	●	
Toggle holder		H H	●			●		●		
Toggle lock		H L	●			●		●		
Terminal cover	For front-connected	C F	●			●		●		
	For rear-connected and plug-in	C R	●			●		●		
Interpole barrier		B A	● ③			● ③		● ③		
Terminal block for lead		T F	●			●		●		
Door flange		D F	●			●		●		
■Standard specifications										
Overcurrent trip mechanism			Thermal-magnetic			Thermal-magnetic		Thermal-magnetic		
Trip button (color)			Yes (Red)			Yes (Red)		Yes (Red)		
Handle position indication (ON: Red, OFF: Green)			Yes			Yes		Yes		
Suitability for isolation			Yes			Yes		Yes		
CE marking			Yes			Yes		Yes		

Notes:
◉ : Standard. This configuration used unless otherwise specified. ○ : Optional standard. Specify when ordering.
● : "yes" or "available". — : "no" or "not available". ① : DC rating available on request. ③ : Line side interpole barriers are supplied as standard. (Front connection only) ⑪ : Provided with DIN rail adaptor. ㉗ : Applicable to only 2 poles breakers.
㊸ : For the extension bars, please palce the order separately in parts.

Time/Current characteristic curves

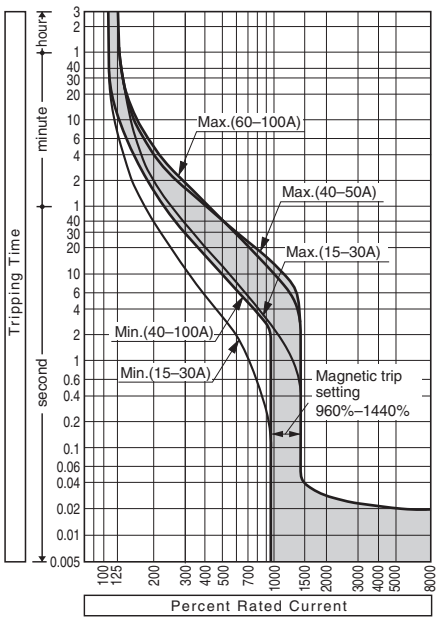

Ambient Compensating Curves

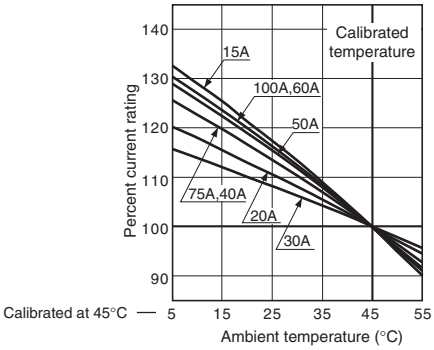

Combinations of Internally Mounted Accessories (Optional)

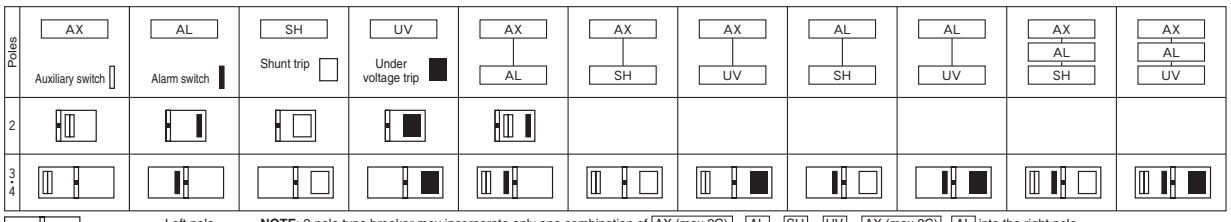

NOTE: 2-pole type breaker may incorporate only one combination of AX (max.2C), AL, SH, UV, AX (max.2C)–AL into the right pole.

Outline dimensions (mm) — S100-NF, S50-GF, S100-GF

Front-connected

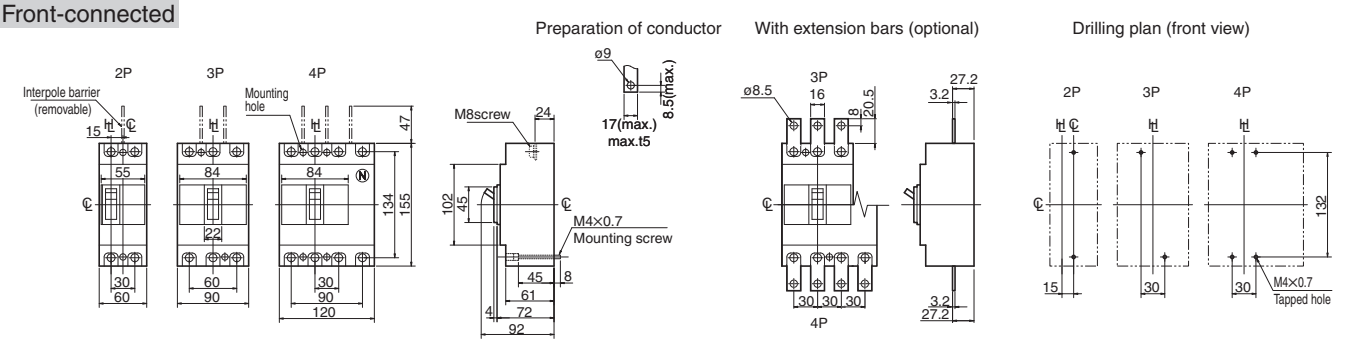

Rear-connected

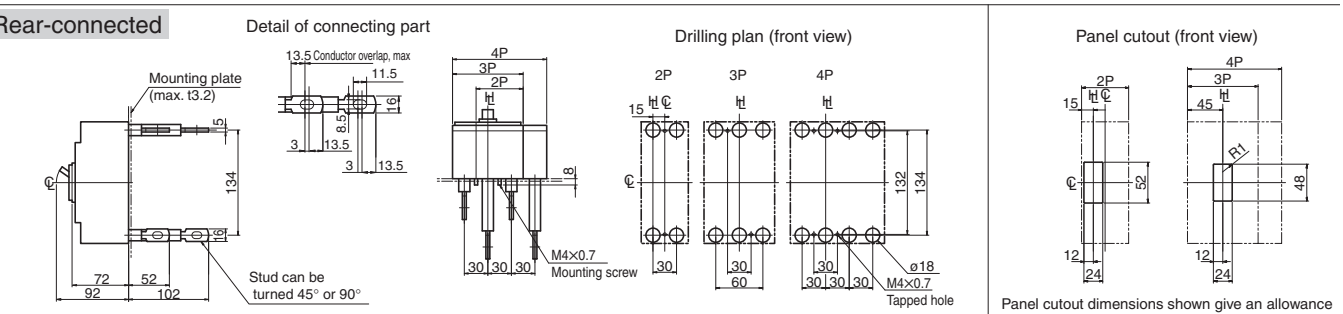

Note: Studs are factory installed in horizontal direction both on the line and load sides.

Panel cutout dimensions shown give an allowance of 1.0mm or more around the handle escutcheon.

Plug-in (Standard)

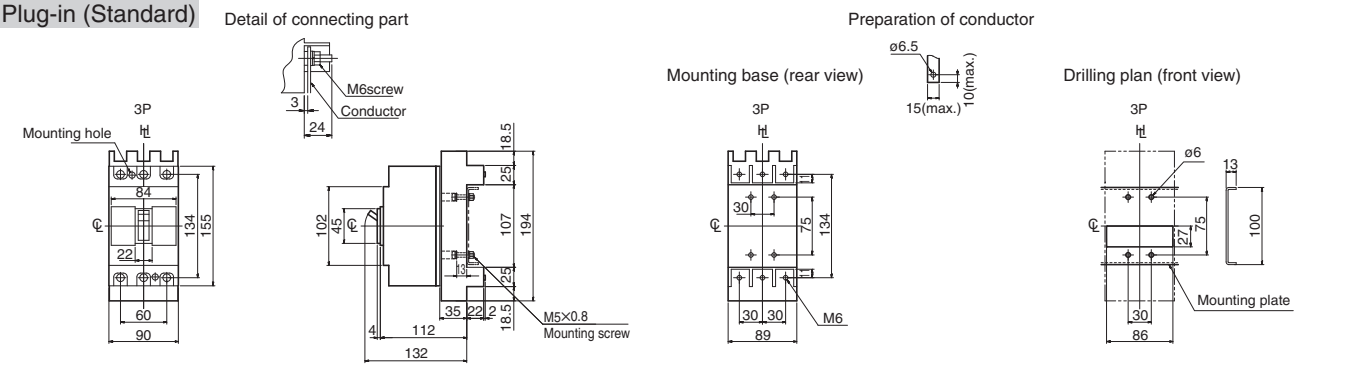

Plug-in (High-performance)

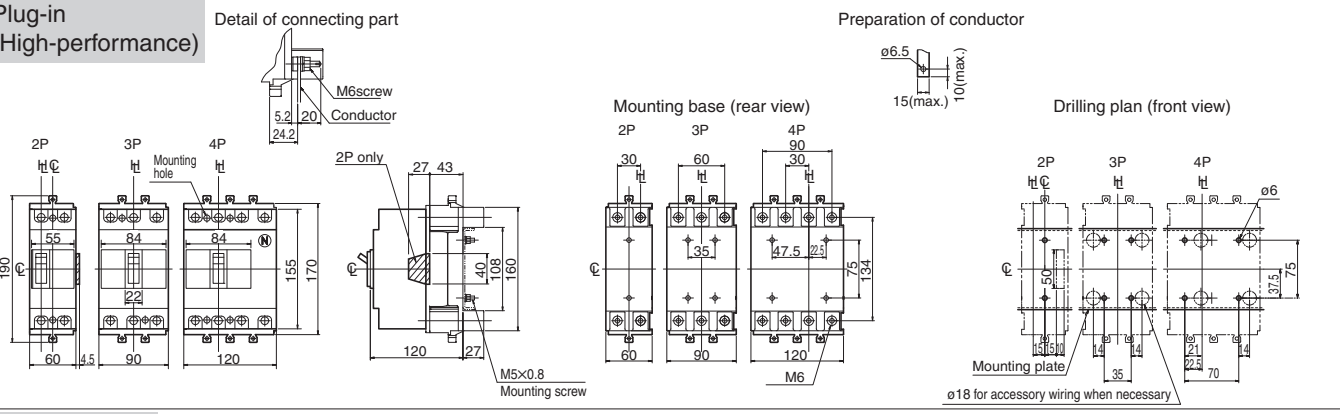

Flush-mounted

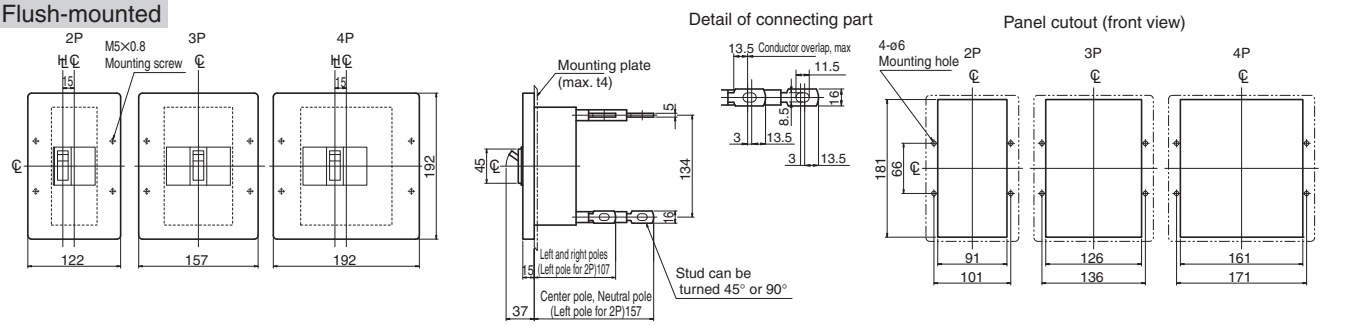

Note: Studs are factory installed in horizontal direction both on the line and load sides.

7 Characteristics and Outline Dimensions *TemBreak2*

Molded Case Circuit Breakers (125A Frame)

S125-NF, S125-GF

Ratings and Specifications

Type			S125-NF			S125-GF		
Number of poles			2	3	4	2	3	4
■Ratings								
Rated current, A Calibrated at 45°C			125			125		
Rated insulation voltage〔U_i〕 V			690			690		
Rated impulse withstand voltage〔U_{imp}〕 kV			8			8		
■Rated breaking capacity, kA								
NK	AC	690V	6/6			6/6		
I_{cu}/I_{cs}(sym)		450V	25/25			50/25		
		240V	50/50			85/85		
	① DC	250V	25/19 ㉗			40/40 ㉗		
IEC60947-2	AC	690V	6/6			6/6		
I_{cu}/I_{cs}(sym)		500V	22/22			25/22		
		440V	25/25			50/25		
		415V	30/30			65/33		
		380V	30/30			65/33		
		240V	50/50			85/85		
	① DC	250V	25/19 ㉗			40/40 ㉗		
		125V	40/30 ㉗			40/40 ㉗		
■Rated short time withstand current, kA			—			—		
Weight (◉ marked standard type) kg			0.7	1.1	1.4	0.7	1.1	1.4
■Connections and Mountings								
Front-connected (FC)	Terminal screws		◉			◉		
	With extension bars		○ ㊸			○ ㊸		
Rear-connected (RC)	Bolt studs		—			—		
	Flat bar studs		○			○		
Plug-in (PM) For switchboards	Standard (PMC)		—	○	—	—	○	—
	High-performance (PMB)		○			○		
For distribution boards (PMC)			—	○	—	—	○	—
Flush-mounted (FP) With flat bar studs			○			○		
Draw-out type (DR)			—			—		
TemPlug70 (PG)			○	○	—	○	○	—
TemPlug45B (PG4)			—			—		
DIN rail mount			—	○ ⑪		—	○ ⑪	
Clip-in chassis mount			—			—		
■Accessories (optional)		**Symbol**						
Externally mounted: Motor operator		M C	—	●		—	●	
External operating handle	Breaker-mounted	H B	—	●		—	●	
	Door-mounted (variable depth)	H P	—	●		—	●	
Toggle extension		H A	—			—		
Mechanical interlock Slide type		M S	—	●		—	●	
Toggle holder		H H	●			●		
Toggle lock		H L	●			●		
Terminal cover	For front-connected	C F	●			●		
	For rear-connected and plug-in	C R	●			●		
Interpole barrier		B A	● ③			● ③		
Terminal block for lead		T F	●			●		
Door flange		D F	●			●		
■Standard specifications								
Overcurrent trip mechanism			Thermal-magnetic			Thermal-magnetic		
Trip button (color)			Yes (Red)			Yes (Red)		
Handle position indication (ON: Red, OFF: Green)			Yes			Yes		
Suitability for isolation			Yes			Yes		
CE marking			Yes			Yes		

Notes:
◉ : Standard. This configuration used unless otherwise specified. ○ : Optional standard. Specify when ordering.
● : "yes" or "available". — : "no" or "not available". ① : DC rating available on request. ③ : Line side interpole barriers are supplied as standard. (Front connection only) ⑪ : Provided with DIN rail adaptor. ㉗ : Applicable to only 2 poles breakers.
㊸ : For the extension bars, please palce the order separately in parts.

Time/Current characteristic curves

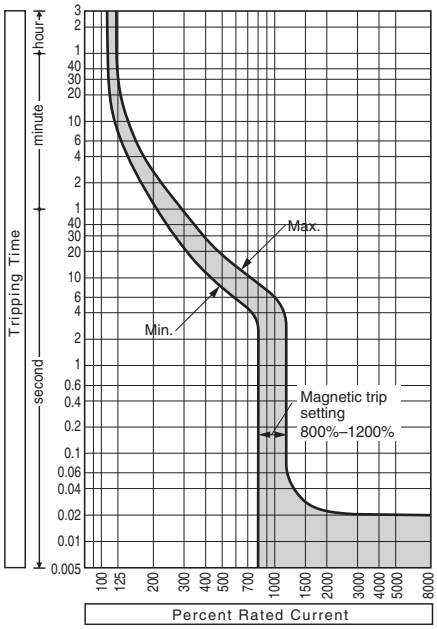

Ambient Compensating Curves

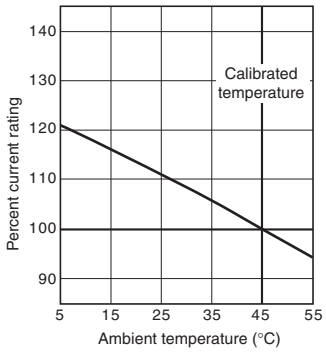

Combinations of Internally Mounted Accessories (Optional)

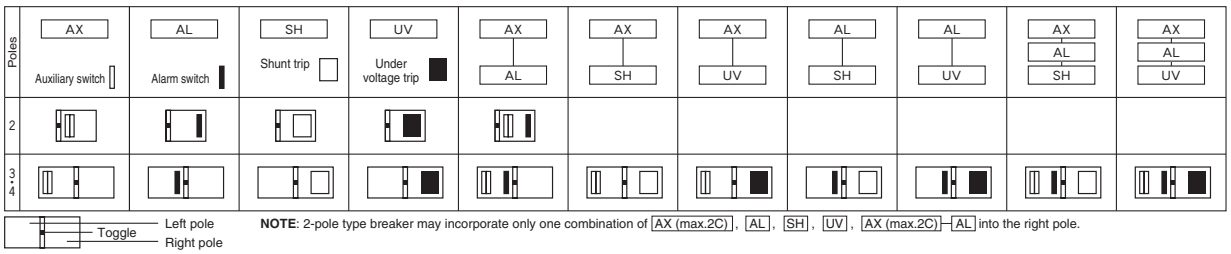

NOTE: 2-pole type breaker may incorporate only one combination of AX (max.2C), AL, SH, UV, AX (max.2C)–AL into the right pole.

Outline dimensions (mm) — S125-NF, S125-GF

Front-connected

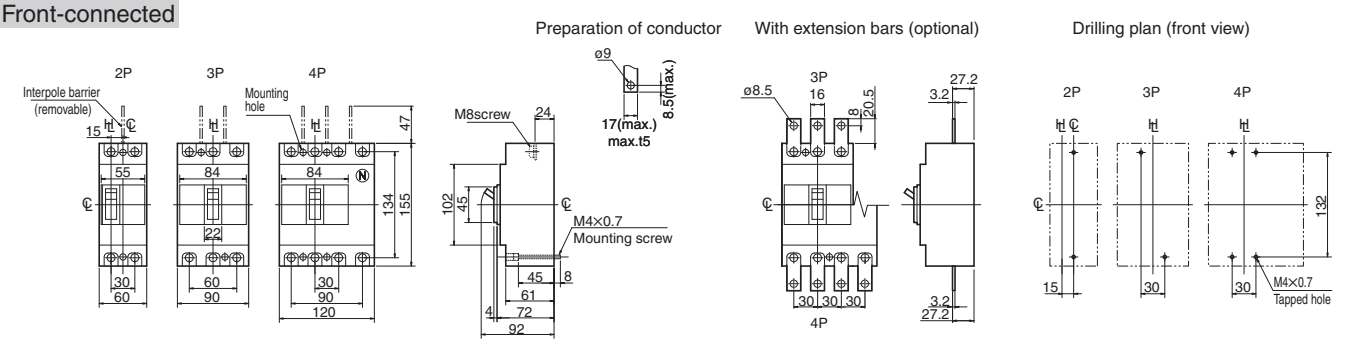

Rear-connected

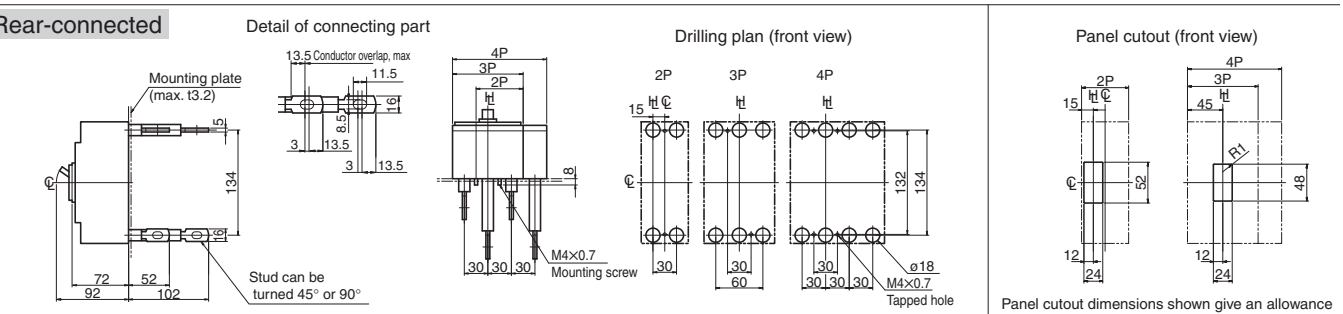

Note: Studs are factory installed in horizontal direction both on the line and load sides.

Panel cutout dimensions shown give an allowance of 1.0mm or more around the handle escutcheon.

Plug-in (Standard)

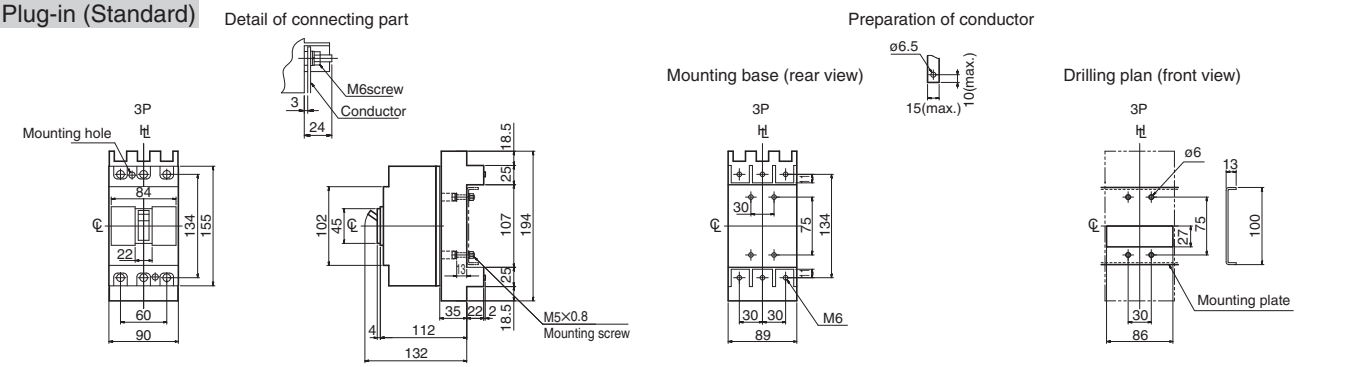

Plug-in (High-performance)

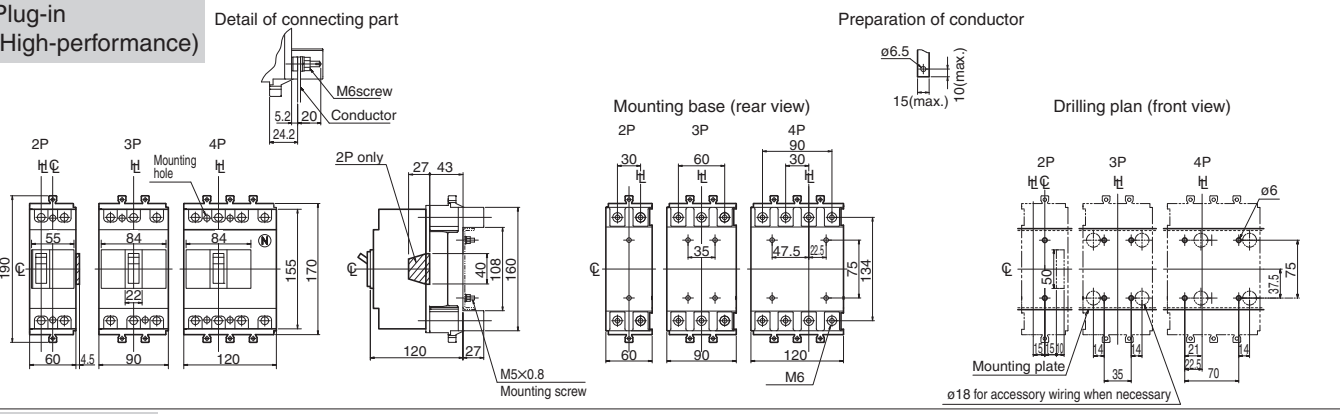

Flush-mounted

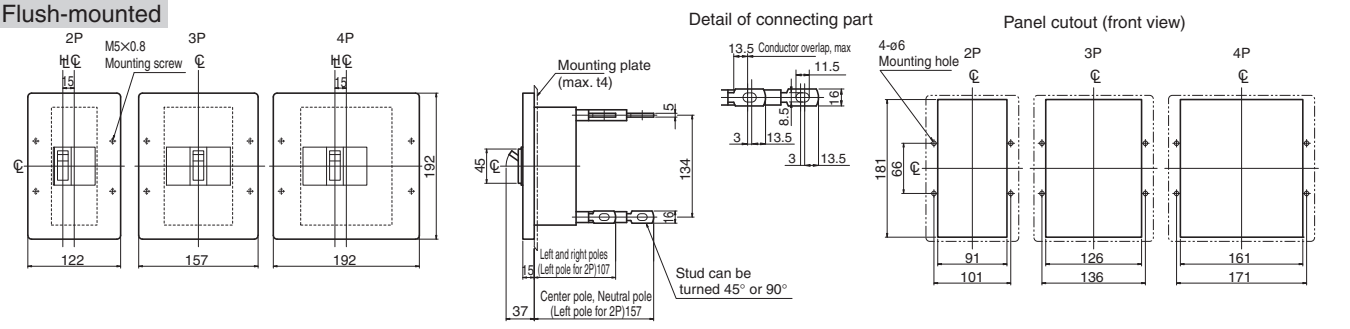

Note: Studs are factory installed in horizontal direction both on the line and load sides.

7 Characteristics and Outline Dimensions *TemBreak2*

Molded Case Circuit Breakers (225A Frame)

S225-NF, S225-GF

Ratings and Specifications

Type			S225-NF			S225-GF		
Number of poles			2＊	3	4	2＊	3	4
■Ratings								
Rated current, A			125	200		125		
Calibrated at 45°C			150	225		150		
			175			175		
						200		
						225		
＊2 poles breakers use the terminals of both ends of 3 poles breakers.								
Rated insulation voltage〔U_i〕 V			690			690		
Rated impulse withstand voltage〔U_{imp}〕 kV			8			8		
■Rated breaking capacity, kA								
NK	AC	690V	7.5/7.5			7.5/7.5		
I_{cu}/I_{cs}(sym)		450V	25/25			50/25		
		240V	65/65			85/85		
	① DC	250V	40/40			40/40		
IEC60947-2	AC	690V	7.5/7.5			7.5/7.5		
I_{cu}/I_{cs}(sym)		500V	25/25			25/25		
		440V	25/25			50/25		
		415V	35/35			65/35		
		380V	35/35			65/35		
		240V	65/65			85/85		
	① DC	250V	40/40			40/40		
		125V	40/40			40/40		
■Rated short time withstand current, kA			—			—		
Weight (◉ marked standard type) kg			1.5	1.5	1.9	1.5	1.5	1.9
■Connections and Mountings								
Front-connected (FC)	Terminal screws		◉			◉		
	With extension bars		○ ㊸			○ ㊸		
Rear-connected (RC)	Bolt studs		—			—		
	Flat bar studs		○			○		
Plug-in (PM)	For switchboards	Standard (PMC)	—	○	—	—	○	—
		High-performance (PMB)	○			○		
	For distribution boards (PMC)		—			—		
Flush-mounted (FP)	With flat bar studs		○			○		
Draw-out type (DR)			—			—		
TemPlug70 (PG)			—	○	—	—	○	—
TemPlug45B (PG4)			—			—		
DIN rail mount			—			—		
Clip-in chassis mount			—			—		
■Accessories (optional)		**Symbol**						
Externally mounted: Motor operator		M C	●			●		
External operating handle	Breaker-mounted	H B	●			●		
	Door-mounted (variable depth)	H P	●			●		
Toggle extension		H A	—			—		
Mechanical interlock	Slide type	M S	●			●		
Toggle holder		H H	●			●		
Toggle lock		H L	●			●		
Terminal cover	For front-connected	C F	●			●		
	For rear-connected and plug-in	C R	●			●		
Interpole barrier		B A	● ③			● ③		
Terminal block for lead		T F	●			●		
Door flange		D F	●			●		
■Standard specifications								
Overcurrent trip mechanism			Thermal-magnetic			Thermal-magnetic		
Trip button (color)			Yes (Red)			Yes (Red)		
Handle position indication (ON: Red, OFF: Green)			Yes			Yes		
Suitability for isolation			Yes			Yes		
CE marking			Yes			Yes		

Notes:
◉ : Standard. This configuration used unless otherwise specified. ○ : Optional standard. Specify when ordering.
● : "yes" or "available". — : "no" or "not available". ① : DC rating available on request. ③ : Line side interpole barriers are supplied as standard. (Front connection only) ㊸ : For the extension bars, please palce the order separately in parts.

Time/Current characteristic curves

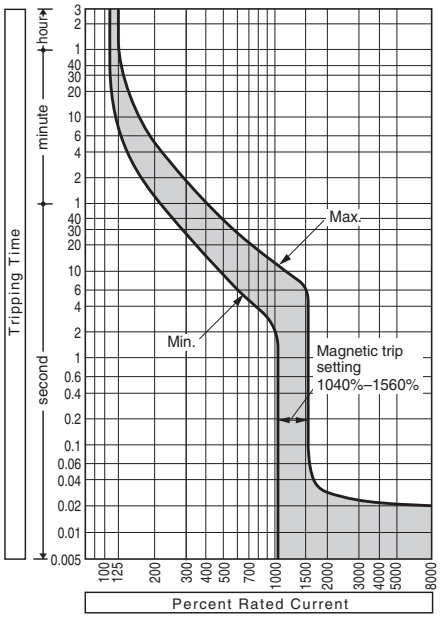

Ambient Compensating Curves

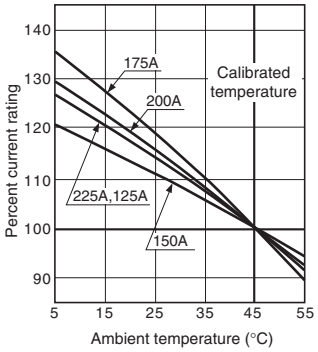

Combinations of Internally Mounted Accessories (Optional)

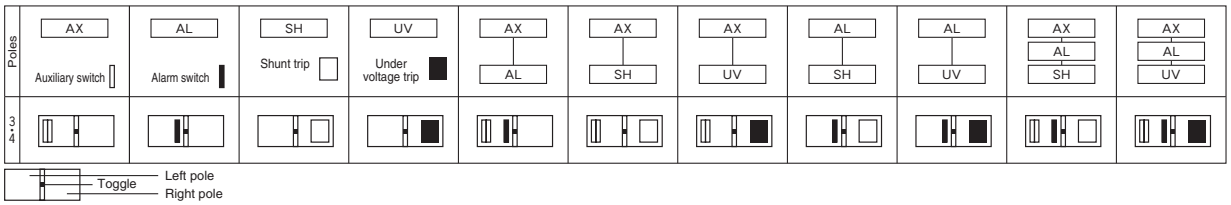

Outline dimensions (mm) — S225-NF, S225-GF

Front-connected

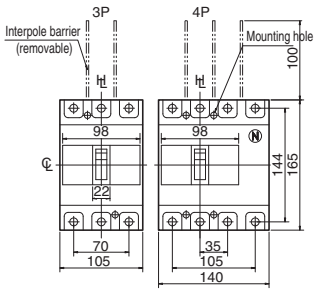

Preparation of conductor

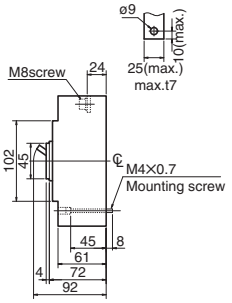

With extension bars (optional)

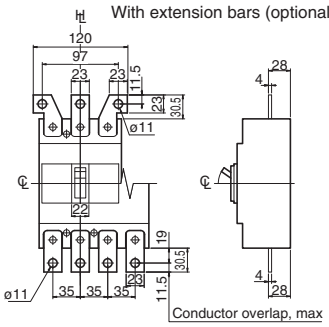

Drilling plan (front view)

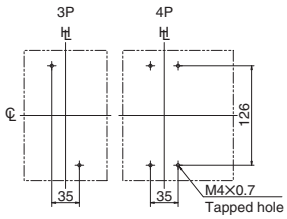

✻Spread extension bars for 3 poles. Straight extension bars for 4 poles.

Rear-connected

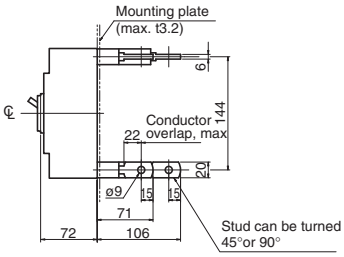

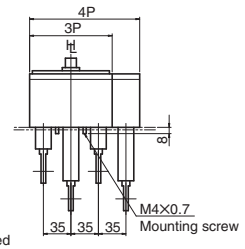

Drilling plan (front view)

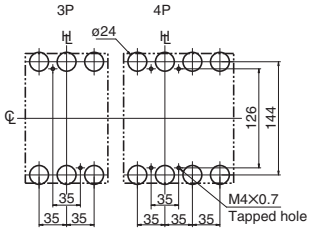

Note: Studs are factory installed in horizontal direction both on the line and load sides.

Panel cutout (front view)

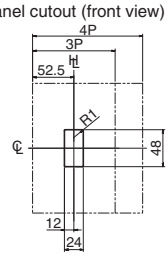

Panel cutout dimensions shown give an allowance of 1.0mm or more around the handle escutcheon.

Plug-in (Standard)

Detail of connecting part

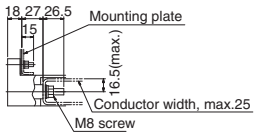

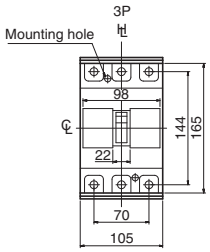

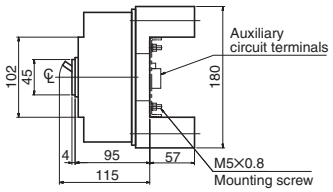

Mounting base (rear view)

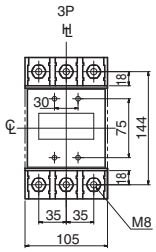

Drilling plan (front view)

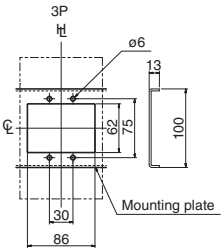

Plug-in (High-performance)

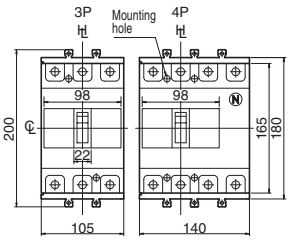

Detail of connecting part

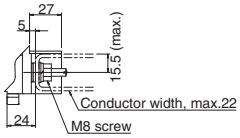

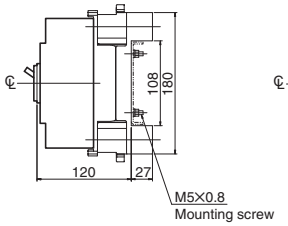

Mounting base (rear view)

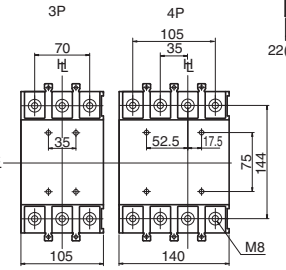

Preparation of conductor

Drilling plan (front view)

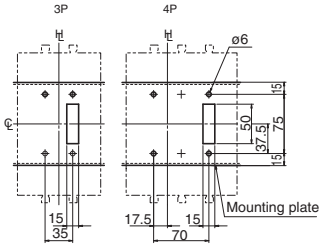

Flush-mounted

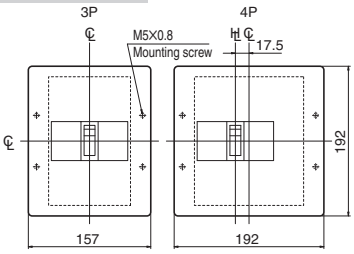

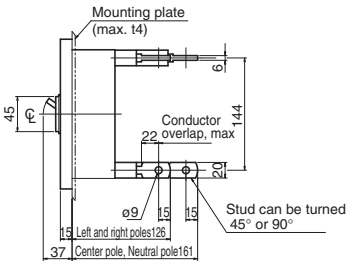

Panel cutout (front view)

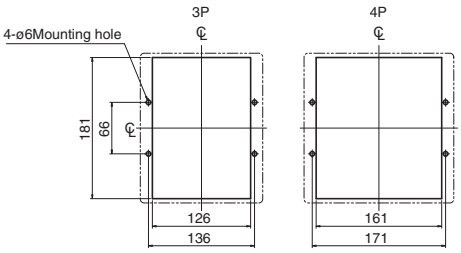

Note: Studs are factory installed in horizontal direction both on the line and load sides.

7 Characteristics and Outline Dimensions *TemBreak2*

Molded Case Circuit Breakers (250A Frame)

E250-SF, S250-SF

Ratings and Specifications

Type			E250-SF			S250-SF			
Number of poles			2＊	3	2＊	3	2＊	3	4	2＊	3	4
■Ratings												
Rated current, A			125		250		125			250		
Calibrated at 45°C			150				150					
			175				175					
			200				200					
			225				225					
＊2 poles breakers use the terminals of both ends of 3 poles breakers.												
Rated insulation voltage〔U_i〕 V			690		690		690			690		
Rated impulse withstand voltage〔U_{imp}〕 kV			8		8		8			8		
■Rated breaking capacity, kA												
NK	AC	690V	—		—		—			—		
I_{cu}/I_{cs}(sym)		450V	15/12		15/12		30/15			30/15		
		240V	35/27		35/27		85/43			85/43		
	① DC	250V	—		—		25/13			25/13		
IEC60947-2	AC	690V	—		—		4/4			4/4		
I_{cu}/I_{cs}(sym)		500V	10/7.5		10/7.5		25/13			25/13		
		440V	15/12		15/12		30/15			30/15		
		415V	25/19		25/19		40/20			40/20		
		380V	25/19		25/19		40/20			40/20		
		240V	35/27		35/27		85/43			85/43		
	① DC	250V	15/12		15/12		25/13			25/13		
		125V	25/19		25/19		40/20			40/20		
■Rated short time withstand current, kA			—		—		—			—		
Weight (◉ marked standard type) kg			1.5	1.5	1.5	1.5	1.5	1.5	1.9	1.5	1.5	1.9
■Connections and Mountings												
Front-connected (FC)	Terminal screws		◉		◉		◉			◉		
	With extension bars		○ ㊸		○ ㊸		○ ㊸			○ ㊸		
Rear-connected (RC)	Bolt studs		—		—		—			—		
	Flat bar studs		○		○		○			○		
Plug-in (PM)	For switchboards	Standard (PMC)	—	○	—	○	—	○	—	—	○	—
		High-performance (PMB)	—		—		—			—		
	For distribution boards (PMC)		—		—		—			—		
Flush-mounted (FP)	With flat bar studs		○		○		○			○		
Draw-out type (DR)			—		—		—			—		
TemPlug70 (PG)			—	○	—	○	—	○	—	—	○	—
TemPlug45B (PG4)			—		—		—			—		
DIN rail mount			—		—		—			—		
Clip-in chassis mount			—		—		—			—		
■Accessories (optional)		**Symbol**										
Externally mounted: Motor operator		M C	●		●		●			●		
External operating handle	Breaker-mounted	H B	●		●		●			●		
	Door-mounted (variable depth)	H P	●		●		●			●		
Toggle extension		H A	—		—		—			—		
Mechanical interlock Slide type		M S	●		●		●			●		
Toggle holder		H H	●		●		●			●		
Toggle lock		H L	●		●		●			●		
Terminal cover	For front-connected	C F	●		●		●			●		
	For rear-connected and plug-in	C R	●		●		●			●		
Interpole barrier		B A	● ③		● ③		● ③			● ③		
Terminal block for lead		T F	●		●		●			●		
Door flange		D F	●		●		●			●		
■Standard specifications												
Overcurrent trip mechanism			Thermal-magnetic		Thermal-magnetic		Thermal-magnetic			Thermal-magnetic		
Trip button (color)			Yes (Red)		Yes (Red)		Yes (Red)			Yes (Red)		
Handle position indication (ON: Red, OFF: Green)			Yes		Yes		Yes			Yes		
Suitability for isolation			Yes		Yes		Yes			Yes		
CE marking			Yes		Yes		Yes			Yes		

Notes:
◉ : Standard. This configuration used unless otherwise specified. ○ : Optional standard. Specify when ordering.
● : "yes" or "available". — : "no" or "not available". ① : DC rating available on request.
③ : Line side interpole barriers are supplied as standard. (Front connection only)
㊸ : For the extension bars, please palce the order separately in parts.

Time/Current characteristic curves

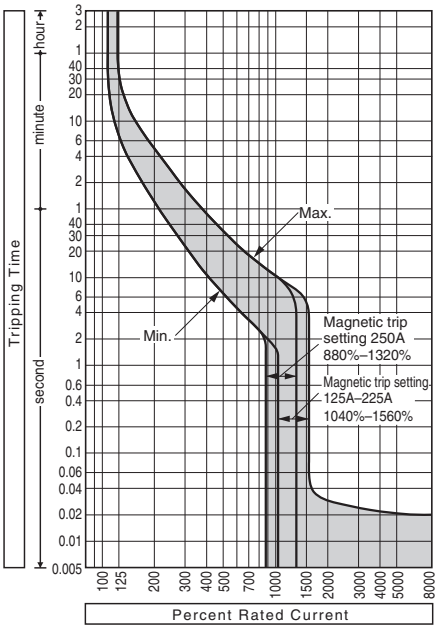

Ambient Compensating Curves

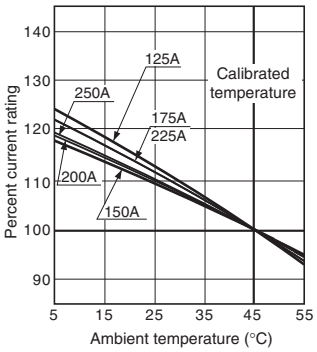

Combinations of Internally Mounted Accessories (Optional)

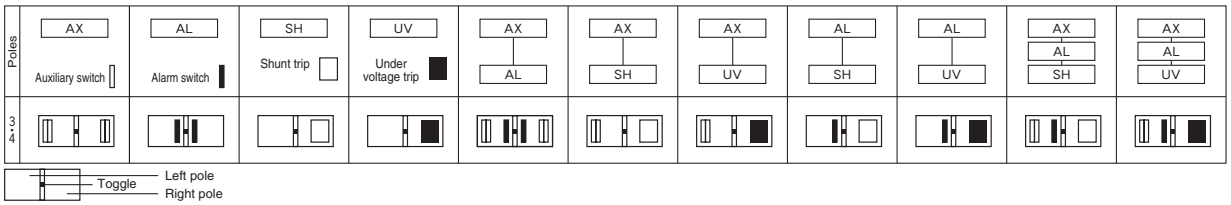

Outline dimensions (mm) — E250-SF, S250-SF

Front-connected

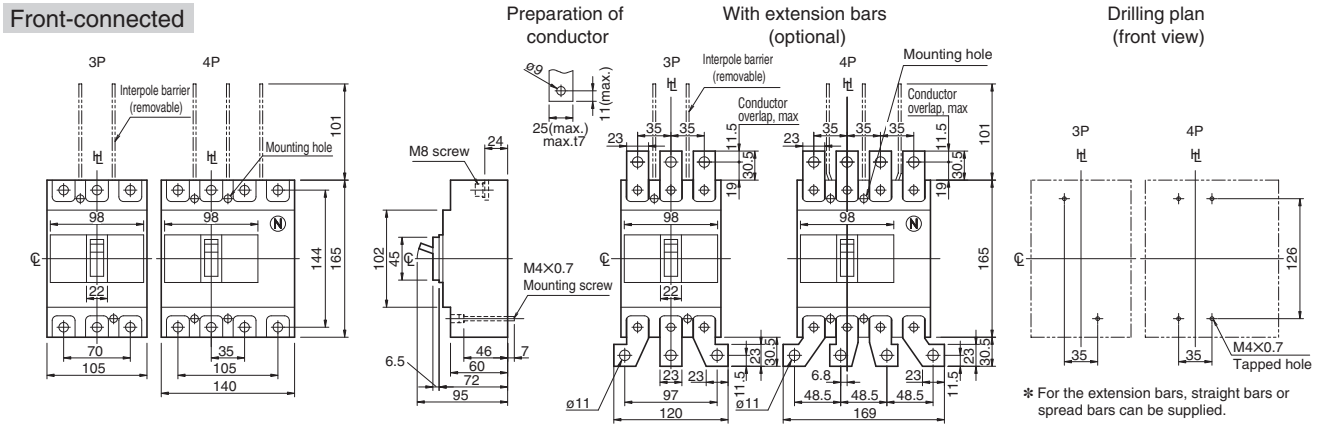

Rear-connected

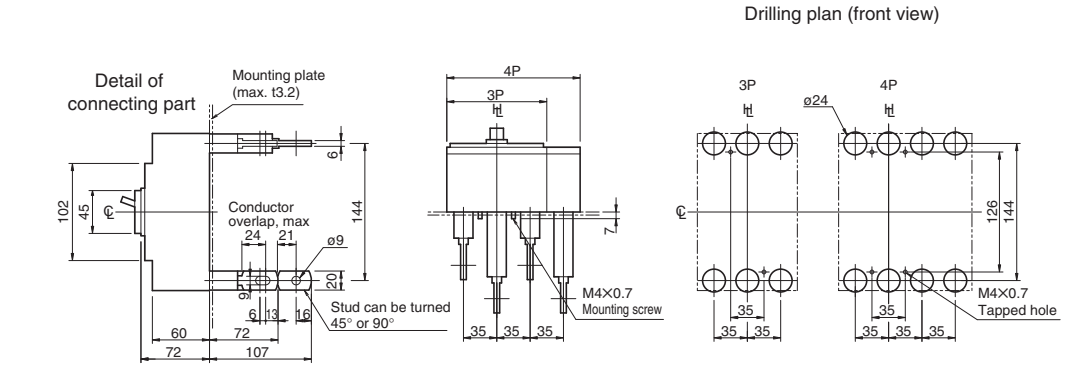

Panel cutout dimensions shown give an allowance of 1.0mm around the handle escutcheon.

Plug-in (Standard)

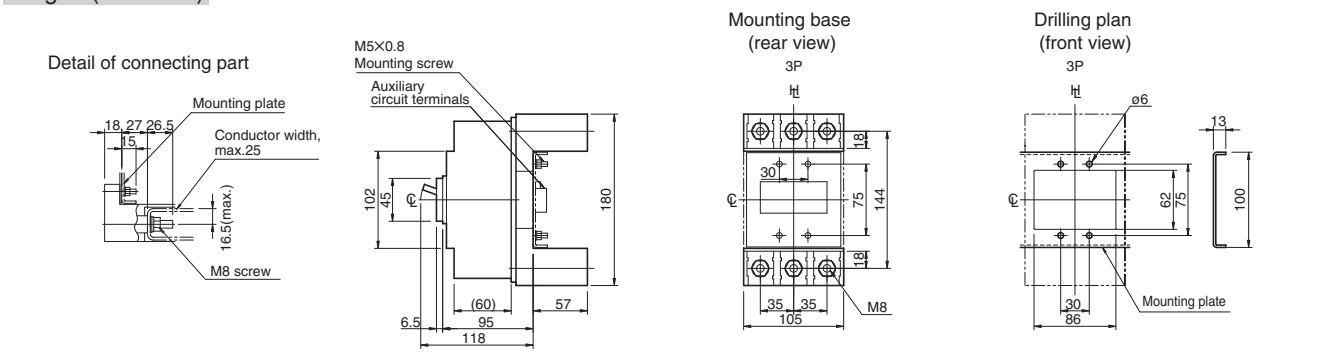

Flush-mounted

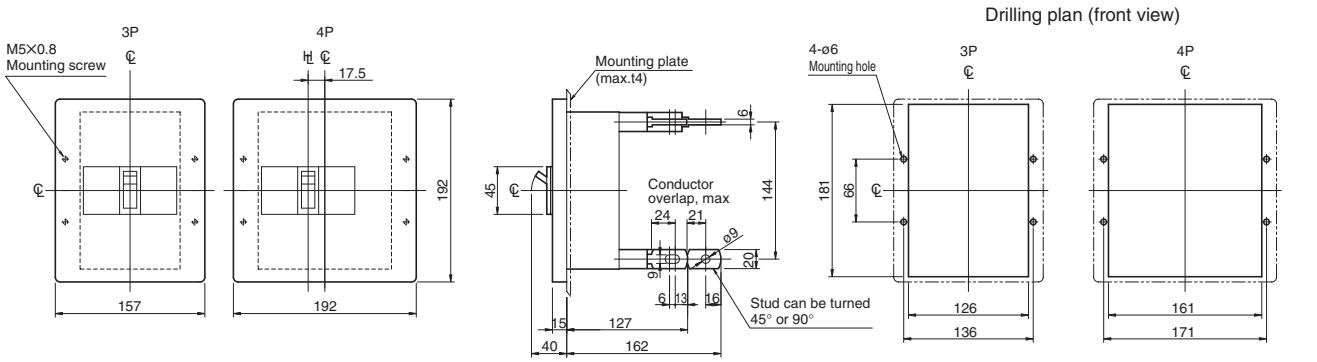

7 Characteristics and Outline Dimensions *TemBreak2*

Molded Case Circuit Breakers (250A Frame)

S250-NF, S250-GF

Ratings and Specifications

Type			S250-NF			S250-GF		
Number of poles			2＊	3	4	2＊	3	4
■Ratings								
Rated current, A Calibrated at 45°C			250			250		
＊2 poles breakers use the terminals of both ends of 3 poles breakers.								
Rated insulation voltage〔U_i〕 V			690			690		
Rated impulse withstand voltage〔U_{imp}〕 kV			8			8		
■Rated breaking capacity, kA								
NK	AC	690V	7.5/7.5			7.5/7.5		
I_{cu}/I_{cs}(sym)		450V	25/25			50/25		
		240V	65/65			85/85		
	① DC	250V	40/40			40/40		
IEC60947-2	AC	690V	7.5/7.5			7.5/7.5		
I_{cu}/I_{cs}(sym)		500V	25/25			25/25		
		440V	25/25			50/25		
		415V	35/35			65/35		
		380V	35/35			65/35		
		240V	65/65			85/85		
	① DC	250V	40/40			40/40		
		125V	40/40			40/40		
■Rated short time withstand current, kA			—			—		
Weight (◉ marked standard type) kg			1.5	1.5	1.9	1.5	1.5	1.9
■Connections and Mountings								
Front-connected (FC)	Terminal screws		◉			◉		
	With extension bars		○ ㊸			○ ㊸		
Rear-connected (RC)	Bolt studs		—			—		
	Flat bar studs		○			○		
Plug-in (PM) For switchboards	Standard (PMC)		—	○	—	—	○	—
	High-performance (PMB)		○			○		
For distribution boards (PMC)			—			—		
Flush-mounted (FP) With flat bar studs			○			○		
Draw-out type (DR)			—			—		
TemPlug70 (PG)			—	○	—	—	○	—
TemPlug45B (PG4)			—			—		
DIN rail mount			—			—		
Clip-in chassis mount			—			—		
■Accessories (optional)		**Symbol**						
Externally mounted: Motor operator		M C	●			●		
External operating handle	Breaker-mounted	H B	●			●		
	Door-mounted (variable depth)	H P	●			●		
Toggle extension		H A	—			—		
Mechanical interlock Slide type		M S	●			●		
Toggle holder		H H	●			●		
Toggle lock		H L	●			●		
Terminal cover	For front-connected	C F	●			●		
	For rear-connected and plug-in	C R	●			●		
Interpole barrier		B A	● ③			● ③		
Terminal block for lead		T F	●			●		
Door flange		D F	●			●		
■Standard specifications								
Overcurrent trip mechanism			Thermal-magnetic			Thermal-magnetic		
Trip button (color)			Yes (Red)			Yes (Red)		
Handle position indication (ON: Red, OFF: Green)			Yes			Yes		
Suitability for isolation			Yes			Yes		
CE marking			Yes			Yes		

Notes:
◉ : Standard. This configuration used unless otherwise specified. ○ : Optional standard. Specify when ordering.
● : "yes" or "available". — : "no" or "not available". ① : DC rating available on request. ③ : Line side interpole barriers are supplied as standard. (Front connection only) ㊸ : For the extension bars, please palce the order separately in parts.

Time/Current characteristic curves

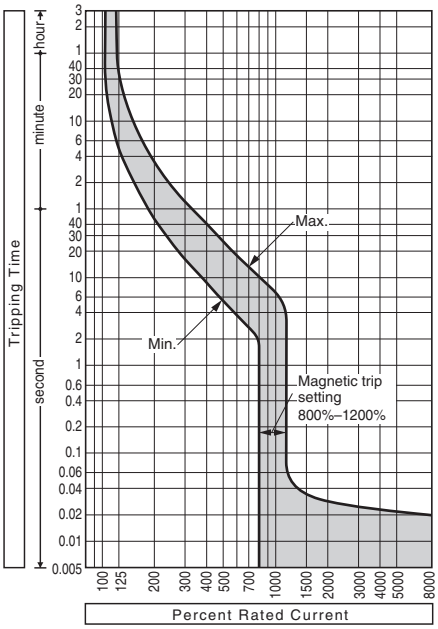

Ambient Compensating Curves

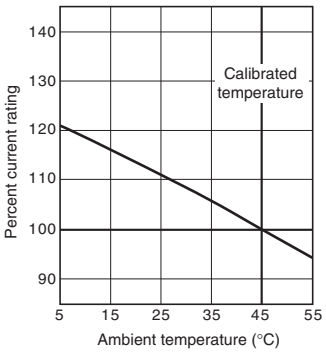

Combinations of Internally Mounted Accessories (Optional)

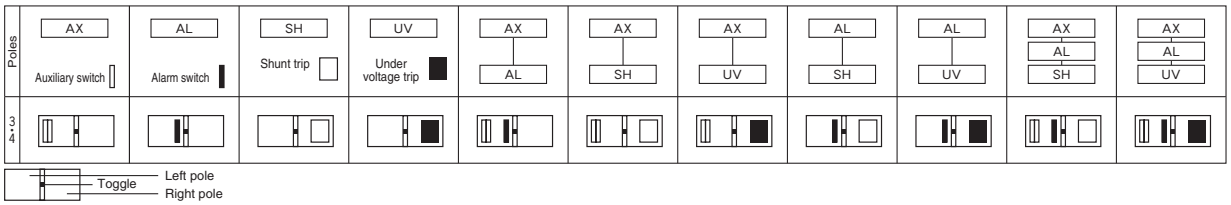

Outline dimensions (mm) — S250-NF, S250-GF

Front-connected

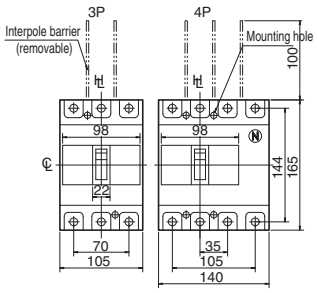

Preparation of conductor

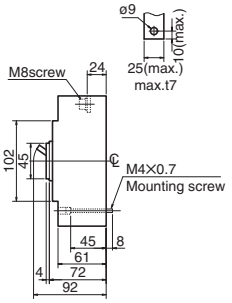

With extension bars (optional)

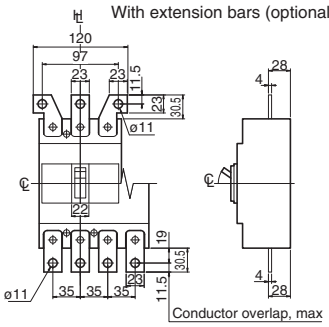

Drilling plan (front view)

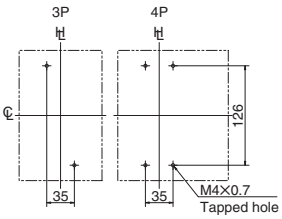

*Spread extension bars for 3 poles. Straight extension bars for 4 poles.

Rear-connected

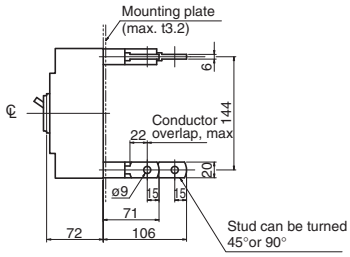

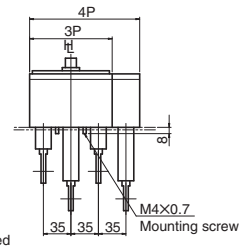

Drilling plan (front view)

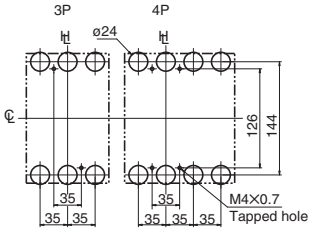

Note: Studs are factory installed in horizontal direction both on the line and load sides.

Panel cutout (front view)

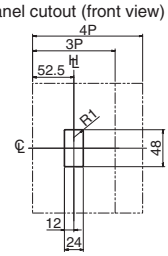

Panel cutout dimensions shown give an allowance of 1.0mm or more around the handle escutcheon.

Plug-in (Standard)

Detail of connecting part

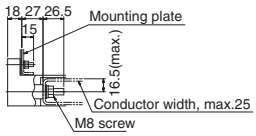

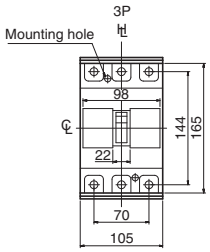

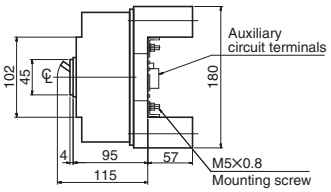

Mounting base (rear view)

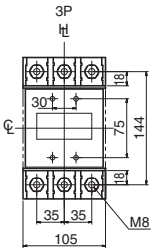

Drilling plan (front view)

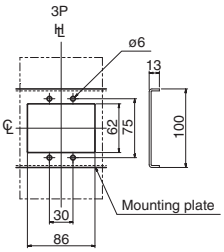

Plug-in (High-performance)

Detail of connecting part

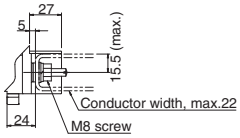

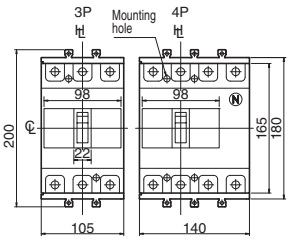

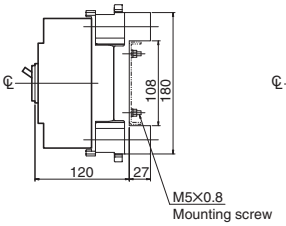

Mounting base (rear view)

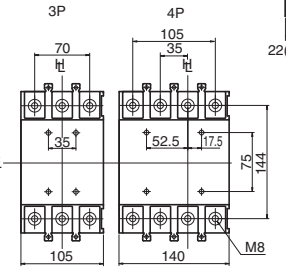

Preparation of conductor

Drilling plan (front view)

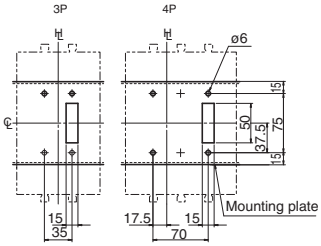

Flush-mounted

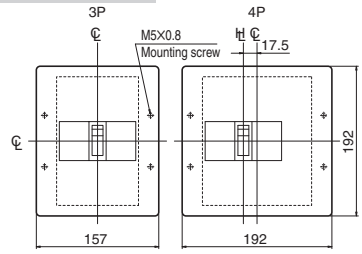

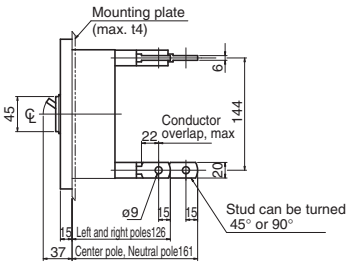

Panel cutout (front view)

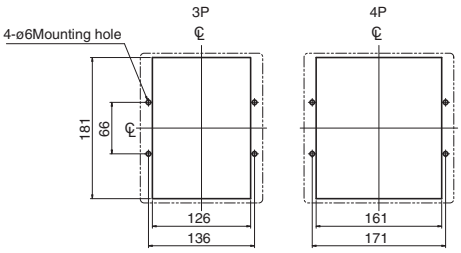

Note: Studs are factory installed in horizontal direction both on the line and load sides.

7 Characteristics and Outline Dimensions *TemBreak2*

Molded Case Circuit Breakers (400A Frame)

S400-CF, S400-NF, S400-GF, S400-PF

Ratings and Specifications

Type			S400-CF		S400-NF		S400-GF		S400-PF	
Number of poles			3	4	3	4	3	4	3	4
■Ratings										
Rated current, A			125	250	125	250	125	250	250	
Calibrated at 45°C			150	300	150	300	150	300	300	
			175	350	175	350	175	350	350	
			200	400	200	400	200	400	400	
			225		225		225			
Rated insulation voltage〔U_i〕 V			690		690		690		690	
Rated impulse withstand voltage〔U_{imp}〕 kV			8		8		8		8	
■Rated breaking capacity, kA										
NK	AC	690V	15/15		20/15		20/15		20/15	
I_{cu}/I_{cs}(sym)		450V	30/30		45/45		65/50		80/80	
		240V	50/50		85/85		100/85		100/85	
	① DC	250V	40/40		—		—		—	
IEC60947-2	AC	690V	15/15		20/15		20/15		20/15	
I_{cu}/I_{cs}(sym)		500V	22/22		30/30		30/30		30/30	
		440V	30/30		45/45		65/50		80/80	
		415V	36/36		50/50		70/50		85/85	
		380V	36/36		50/50		70/50		85/85	
		240V	50/50		85/85		100/85		100/85	
	① DC	250V	40/40		40/40		40/40		40/40	
		125V	40/40		40/40		40/40		40/40	
■Rated short time withstand current, kA			—		—		—		—	
Weight (◉ marked standard type) kg			4.2	5.6	4.2	5.6	4.2	5.6	4.2	5.6
■Connections and Mountings										
Front-connected (FC)	Terminal screws		◉		◉		◉		◉	
	With extension bars		○ (BAR)		○ (BAR)		○ (BAR)		○ (BAR)	
Rear-connected (RC)	Bolt studs		—		—		—		—	
	Flat bar studs		○		○		○		○	
Plug-in (PM) For switchboards	Standard (PMC)		○	—	○	—	○	—	—	
	High-performance (PMB)		○		○		○		○	
For distribution boards (PMC)			—		—		—		—	
Flush-mounted (FP) With flat bar studs			○		○		○		○	
Draw-out type (DR)			▲		▲		▲		▲	
TemPlug70 (PG)			○	—	○	—	○	—	○	—
TemPlug45B (PG4)			—		—		—		—	
DIN rail mount			—		—		—		—	
Clip-in chassis mount			—		—		—		—	
■Accessories (optional)		Symbol								
Externally mounted: Motor operator		M C	●		●		●		●	
External operating handle	Breaker-mounted	H B	●		●		●		●	
	Door-mounted (variable depth)	H P	●		●		●		●	
Toggle extension		H A	●		●		●		●	
Mechanical interlock⑨ Slide type		M S	●		●		●		●	
Toggle holder		H H	●		●		●		●	
Toggle lock		H L								
Terminal cover	For front-connected	C F	●		●		●		●	
	For rear-connected and plug-in	C R	●		●		●		●	
Interpole barrier		B A	● ③		● ③		● ③		● ③	
Terminal block for lead		T F	●		●		●		●	
Door flange		D F	●		●		●		●	
■Standard specifications										
Overcurrent trip mechanism			Thermal-magnetic		Thermal-magnetic		Thermal-magnetic		Thermal-magnetic	
Trip button (color)			Yes (Red)		Yes (Red)		Yes (Red)		Yes (Red)	
Handle position indication (ON: Red, OFF: Green)			Yes		Yes		Yes		Yes	
Suitability for isolation			Yes		Yes		Yes		Yes	
CE marking			Yes		Yes		Yes		Yes	

Notes:
◉ : Standard. This configuration used unless otherwise specified. ○ : Optional standard. Specify when ordering.
▲ : Semi-standard. ● : "yes" or "available". — : "no" or "not available". ① : DC rating available on request.
③ : Line side interpole barriers are supplied as standard. (Front connection only)
⑨ : The mechanical interlock is not applicable to the draw-out type (DR).

Time/Current characteristic curves

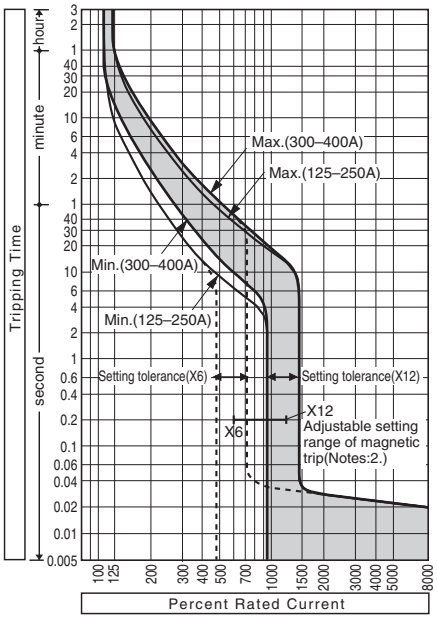

Ambient Compensating Curves

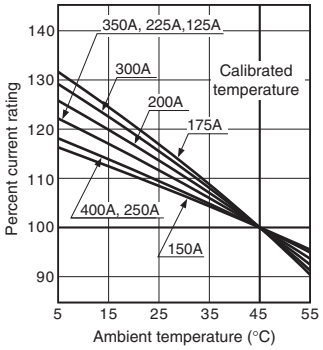

Magnetic trip pickup current

Rated current (A)	Magnetic trip pickup current Adjustable range (A)						
I_n×	12	11	10	9	8	7	6
125	1500	1375	1250	1125	1000	875	750
150	1800	1650	1500	1350	1200	1050	900
175	2100	1925	1750	1575	1400	1225	1050
200	2400	2200	2000	1800	1600	1400	1200
225	2700	2475	2250	2025	1800	1575	1350
250	3000	2750	2500	2250	2000	1750	1500
300	3600	3300	3000	2700	2400	2100	1800
350	4200	3850	3500	3150	2800	2450	2100
400	4800	4400	4000	3600	3200	2800	2400

Notes:
1. Setting tolerance: ±20%.
2. The protection characteristic curves assume that the magnetic trip current is adjustable.
3. Unless otherwise stated when ordering, the selector dial is factory set to position "12".
4. The trip pickup current of DC models is not adjustable; the dial position corresponding to the trip pickup current is marked with a white point.

Combinations of Internally Mounted Accessories (Optional)

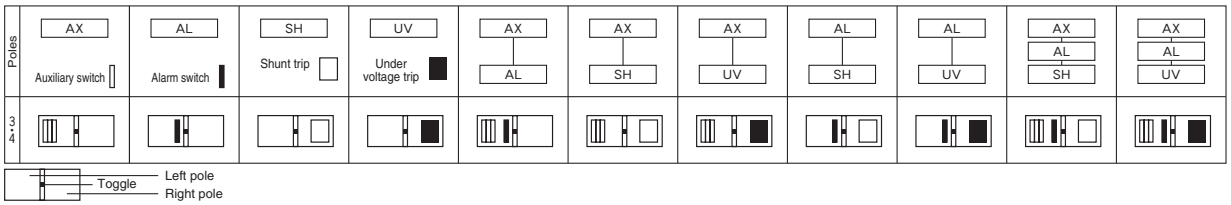

Outline dimensions (mm) — S400-CF, S400-NF, S400-GF, S400-PF

Front-connected

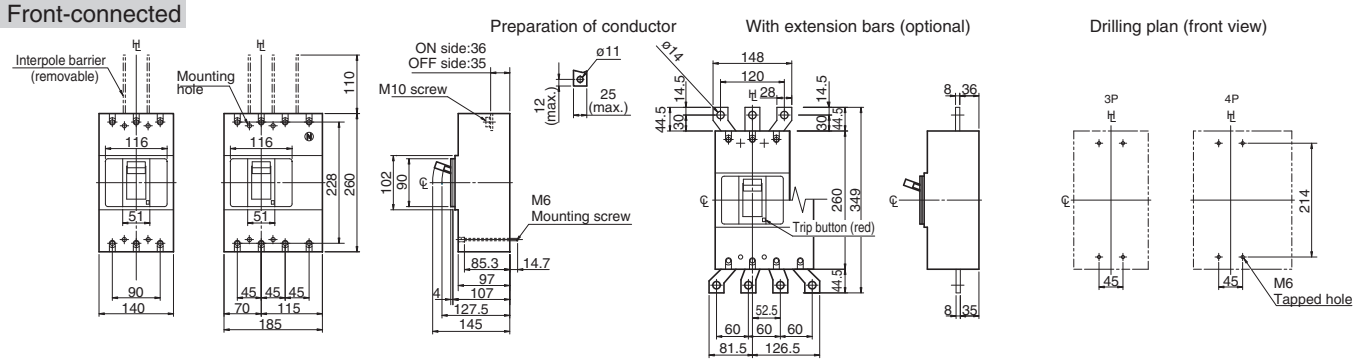

Rear-connected

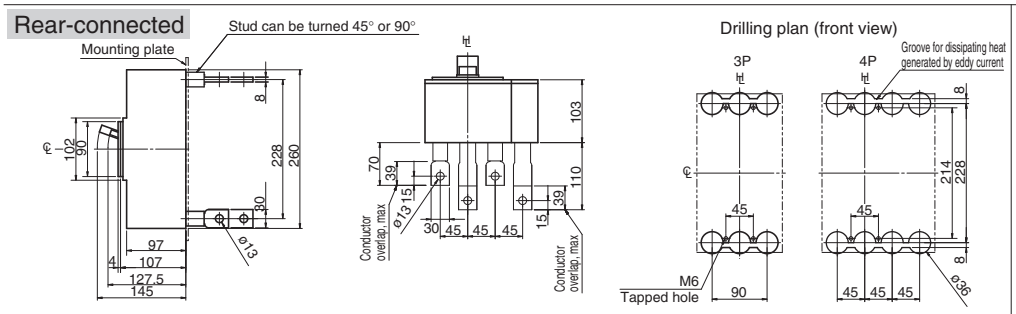

Note: Studs are factory installed in horizontal direction both on the line and load sides.

Panel cutout (front view)

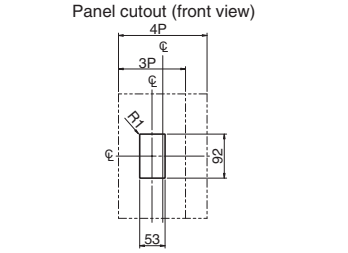

Panel cutout dimensions shown give an allowance of 1.0mm around the handle escutcheon.

Plug-in (Standard)

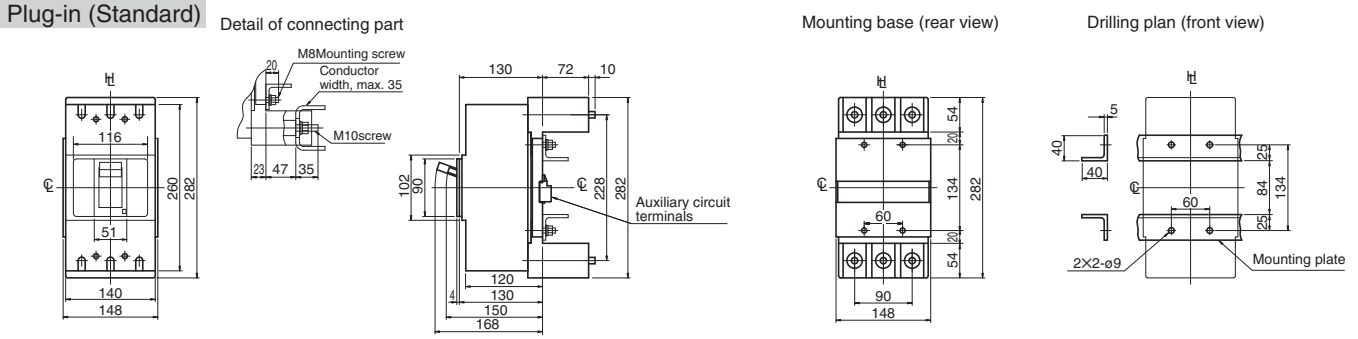

Plug-in (High-performance)

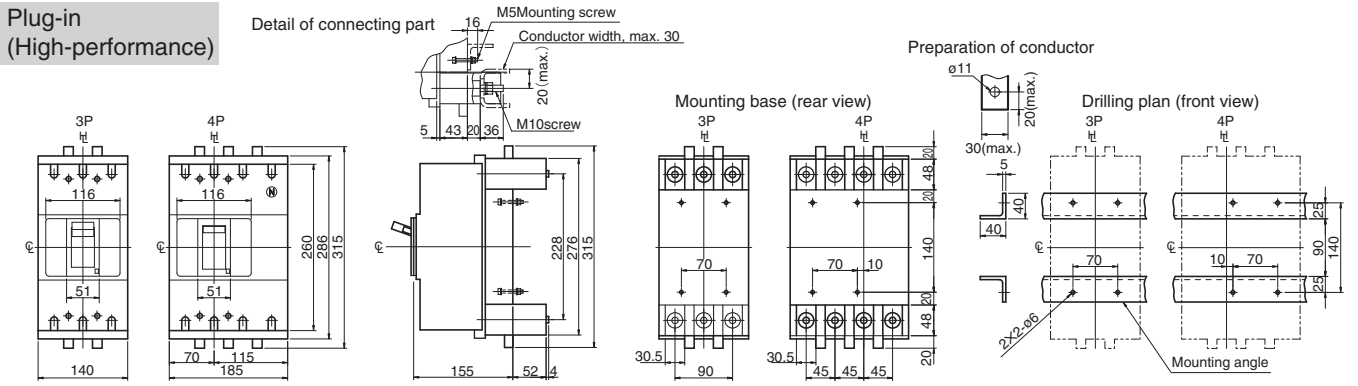

Flush-mounted

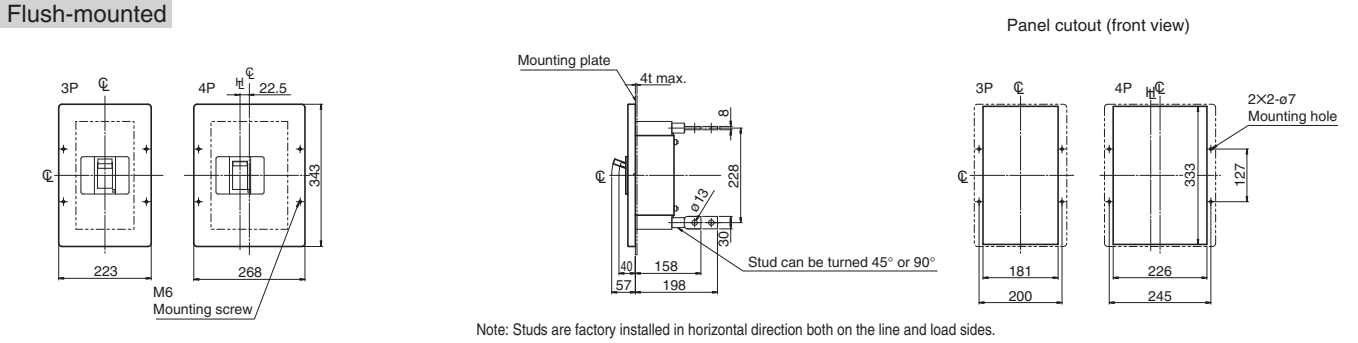

Note: Studs are factory installed in horizontal direction both on the line and load sides.

7 Characteristics and Outline Dimensions *TemBreak2*

Molded Case Circuit Breakers (100A Frame)

H100-NF, L100-NF

Ratings and Specifications

Type			H100-NF		L100-NF	
Number of poles			3	4	3	4
■Ratings						
Rated current, A			15	50	15	50
Calibrated at 45°C			20	60	20	60
			30	75	30	75
			40	100	40	100
Rated insulation voltage〔U_i〕 V			690		690	
Rated impulse withstand voltage〔U_{imp}〕 kV			8		8	
■Rated breaking capacity, kA						
NK	AC	690V	20/15		25/20	
I_{cu}/I_{cs}(sym)		450V	120/80		180/135	
		240V	150/150		200/150㉛	
	① DC	250V	—		—	
IEC60947-2	AC	690V	20/15		25/20	
I_{cu}/I_{cs}(sym)		500V	45/45		65/65	
		440V	120/80		180/135	
		415V	125/85		200/150	
		380V	125/85		200/150	
		240V	150/150		200/150	
	① DC	250V	40/40		40/40	
		125V	40/40		40/40	
■Rated short time withstand current, kA			—		—	
Weight (◉ marked standard type) kg			2.4	3.2	2.4	3.2
■Connections and Mountings						
Front-connected (FC)	Terminal screws		◉		◉	
	With extension bars		○ ㊸		○ ㊸	
Rear-connected (RC)	Bolt studs		—		—	
	Flat bar studs		○		○	
Plug-in (PM)	For switchboards	Standard (PMC)	○	—	○	—
		High-performance (PMB)	○		○	
	For distribution boards (PMC)		—		—	
Flush-mounted (FP)	With flat bar studs		○		○	
Draw-out type (DR)			—		—	
TemPlug70 (PG)			▲	—	—	
TemPlug45B (PG4)			—		—	
DIN rail mount			—		—	
Clip-in chassis mount			—		—	
■Accessories (optional)		**Symbol**				
Externally mounted: Motor operator		M C	●		●	
External operating handle	Breaker-mounted	H B	●		●	
	Door-mounted (variable depth)	H P	●		●	
Toggle extension		H A	—		—	
Mechanical interlock	Slide type	M S	●		●	
Toggle holder		H H	●		●	
Toggle lock		H L	●		●	
Terminal cover	For front-connected	C F	●		●	
	For rear-connected and plug-in	C R	●		●	
Interpole barrier		B A	● ③		● ③	
Terminal block for lead		T F	●		●	
Door flange		D F	●		●	
■Standard specifications						
Overcurrent trip mechanism			Thermal-magnetic		Thermal-magnetic	
Trip button (color)			Yes (Red)		Yes (Red)	
Handle position indication (ON: Red, OFF: Green)			Yes		Yes	
Suitability for isolation			Yes		Yes	
CE marking			Yes		Yes	

Notes:
◉ : Standard. This configuration used unless otherwise specified. ○ : Optional standard. Specify when ordering.
▲ : Semi-standard. ● : "yes" or "available". — : "no" or "not available". ① : DC rating available on request.
③ : Line side interpole barriers are supplied as standard. (Front connection only)
㉛ : Also applicable to AC415V. ㊸ : For the extension bars, please palce the order separately in parts.

Time/Current characteristic curves

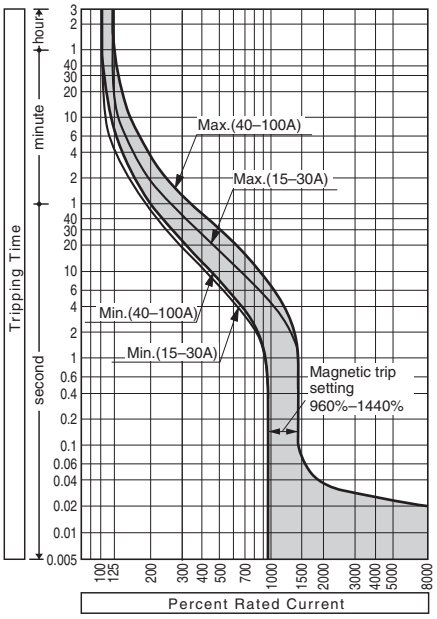

Ambient Compensating Curves

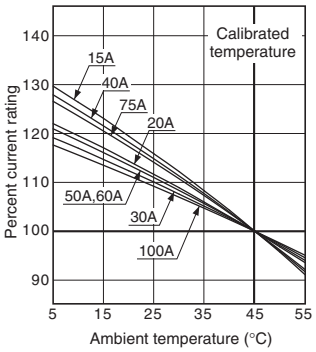

Combinations of Internally Mounted Accessories (Optional)

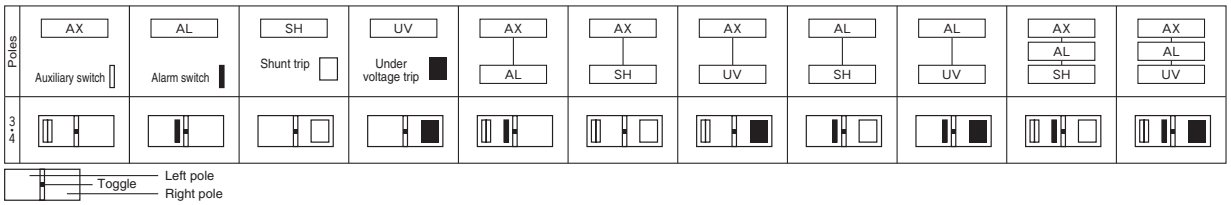

Outline dimensions (mm) — H100-NF, L100-NF

Front-connected

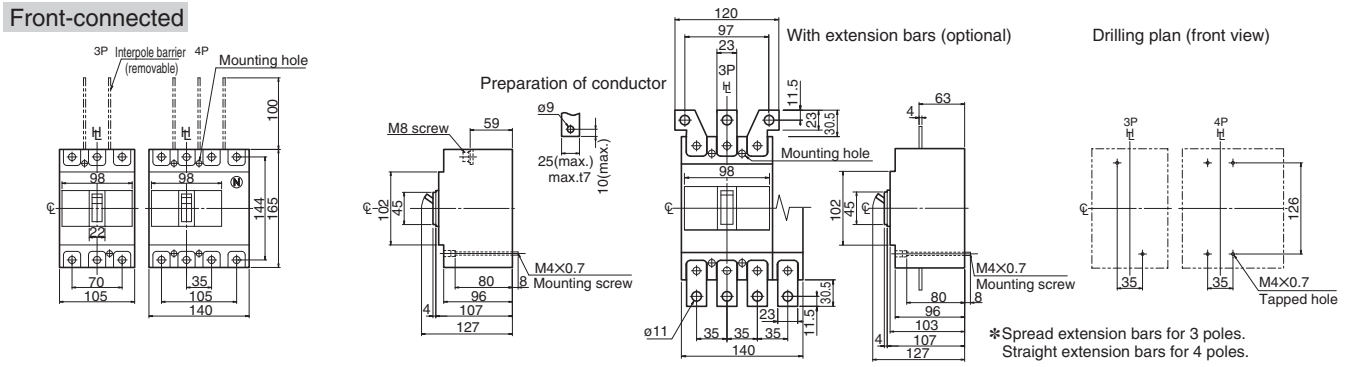

Rear-connected

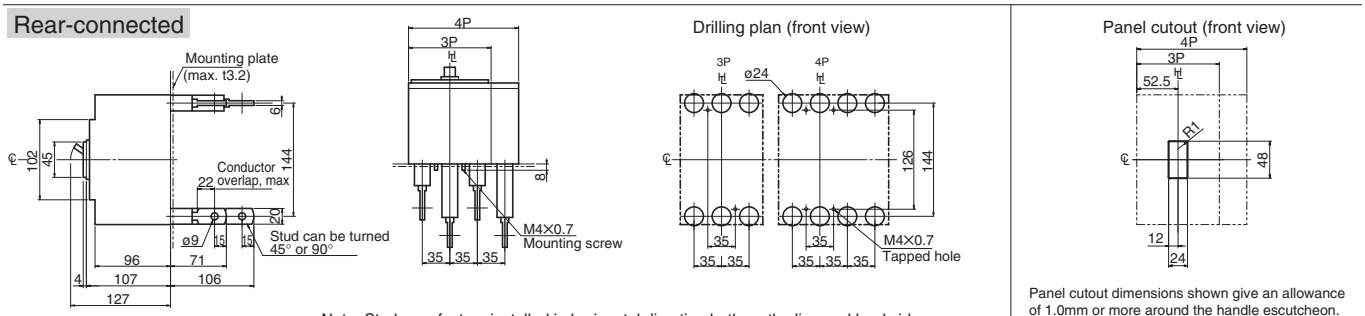

Panel cutout dimensions shown give an allowance of 1.0mm or more around the handle escutcheon.

Note: Studs are factory installed in horizontal direction both on the line and load sides.

Plug-in (Standard)

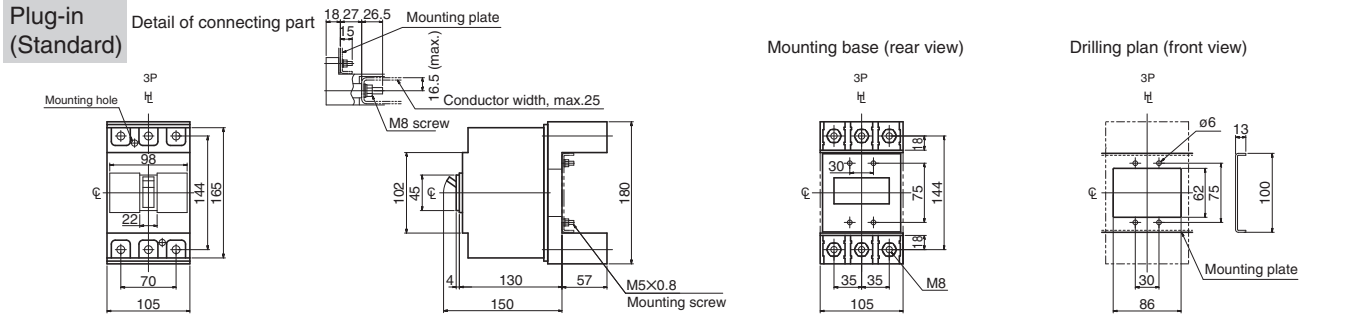

Plug-in (High-performance)

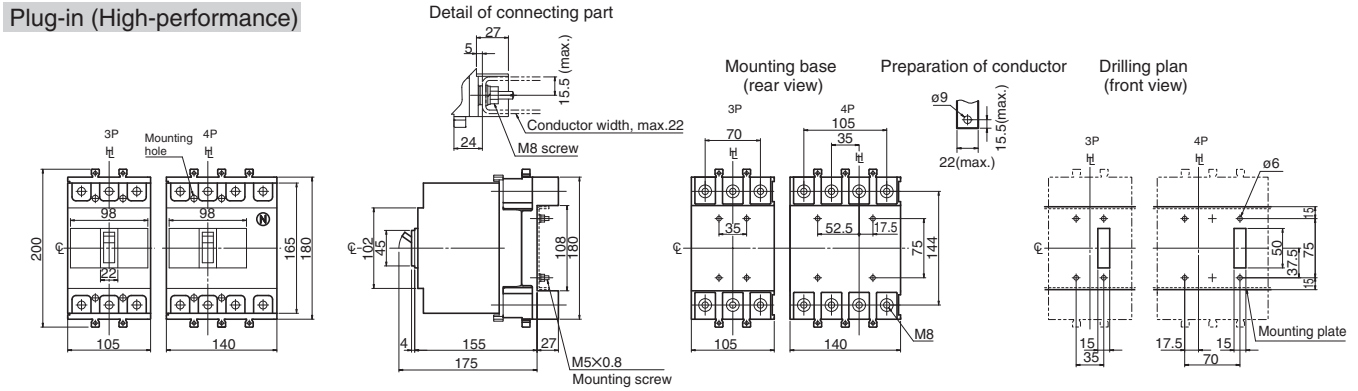

Flush-mounted

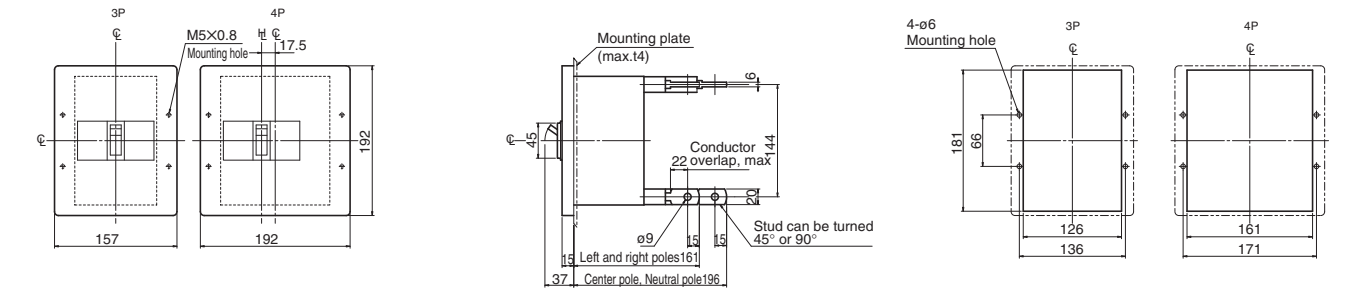

Note: Studs are factory installed in horizontal direction both on the line and load sides.

7 Characteristics and Outline Dimensions *TemBreak2*

Molded Case Circuit Breakers (125A Frame)

H125-NF, L125-NF

Ratings and Specifications

Type			H125-NF		L125-NF	
Number of poles			3	4	3	4
■Ratings						
Rated current, A Calibrated at 45°C			125		125	
Rated insulation voltage〔U_i〕 V			690		690	
Rated impulse withstand voltage〔U_{imp}〕 kV			8		8	
■Rated breaking capacity, kA						
NK	AC	690V	20/15		25/20	
I_{cu}/I_{cs}(sym)		450V	120/80		180/135	
		240V	150/150		200/150	
	① DC	250V	—		—	
IEC60947-2	AC	690V	20/15		25/20	
I_{cu}/I_{cs}(sym)		500V	45/45		65/65	
		440V	120/80		180/135	
		415V	125/85		200/150	
		380V	125/85		200/150	
		240V	150/150		200/150	
	① DC	250V	40/40		40/40	
		125V	40/40		40/40	
■Rated short time withstand current, kA			—		—	
Weight (◉ marked standard type) kg			2.4	3.2	2.4	3.2
■Connections and Mountings						
Front-connected (FC)	Terminal screws		◉		◉	
	With extension bars		○ ㊸		○ ㊸	
Rear-connected (RC)	Bolt studs		—		—	
	Flat bar studs		○		○	
Plug-in (PM)	For switchboards	Standard (PMC)	○	—	○	—
		High-performance (PMB)	○		○	
	For distribution boards (PMC)		—		—	
Flush-mounted (FP)	With flat bar studs		○		○	
Draw-out type (DR)			—		—	
TemPlug70 (PG)			▲	—	—	
TemPlug45B (PG4)			—		—	
DIN rail mount			—		—	
Clip-in chassis mount			—		—	
■Accessories (optional)		**Symbol**				
Externally mounted: Motor operator		M C	●		●	
External operating handle	Breaker-mounted	H B	●		●	
	Door-mounted (variable depth)	H P	●		●	
Toggle extension		H A	—		—	
Mechanical interlock	Slide type	M S	●		●	
Toggle holder		H H	●		●	
Toggle lock		H L	●		●	
Terminal cover	For front-connected	C F	●		●	
	For rear-connected and plug-in	C R	●		●	
Interpole barrier		B A	● ③		● ③	
Terminal block for lead		T F	●		●	
Door flange		D F	●		●	
■Standard specifications						
Overcurrent trip mechanism			Thermal-magnetic		Thermal-magnetic	
Trip button (color)			Yes (Red)		Yes (Red)	
Handle position indication (ON: Red, OFF: Green)			Yes		Yes	
Suitability for isolation			Yes		Yes	
CE marking			Yes		Yes	

Notes:
◉ : Standard. This configuration used unless otherwise specified. ○ : Optional standard. Specify when ordering.
▲ : Semi-standard. ● : "yes" or "available". — : "no" or "not available". ① : DC rating available on request.
③ : Line side interpole barriers are supplied as standard. (Front connection only)
㊸ : For the extension bars, please palce the order separately in parts.

Time/Current characteristic curves

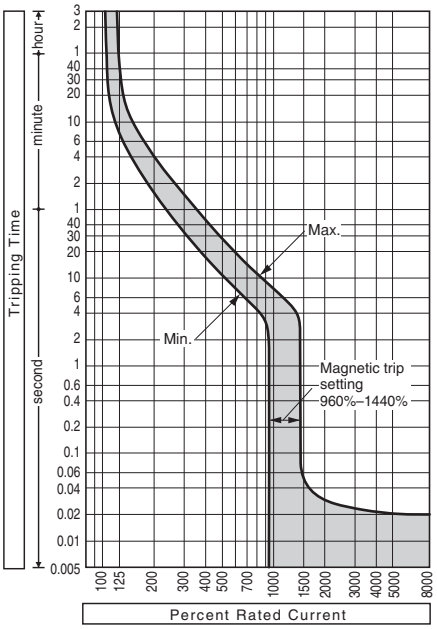

Ambient Compensating Curves

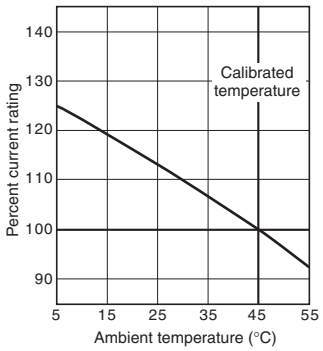

Combinations of Internally Mounted Accessories (Optional)

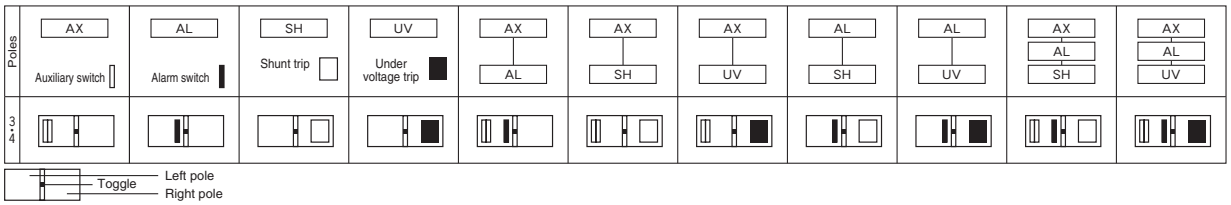

Outline dimensions (mm) H125-NF, L125-NF

Front-connected

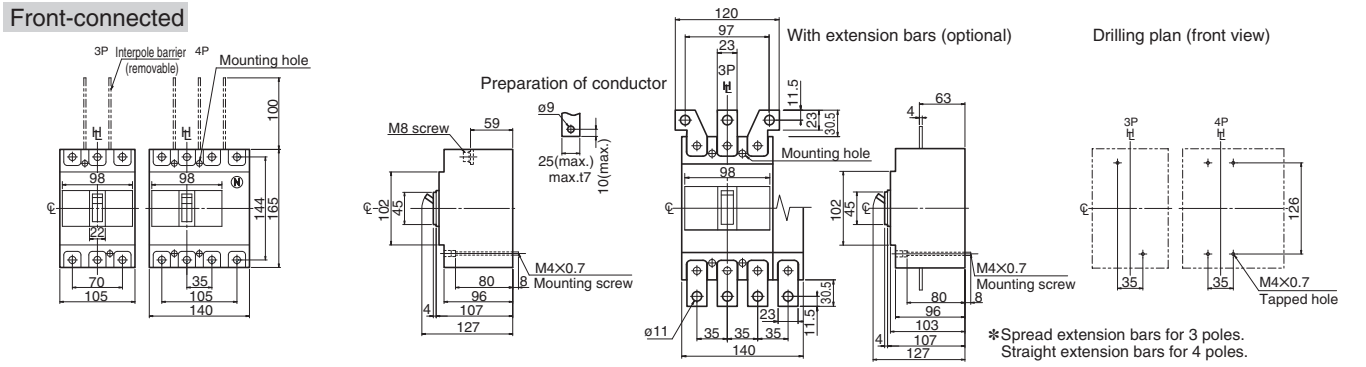

Rear-connected

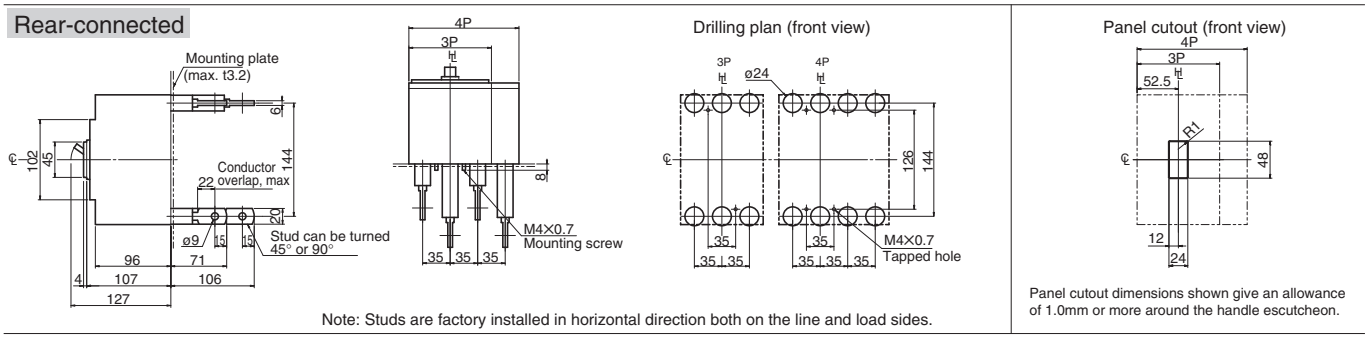

Panel cutout dimensions shown give an allowance of 1.0mm or more around the handle escutcheon.

Note: Studs are factory installed in horizontal direction both on the line and load sides.

Plug-in (Standard)

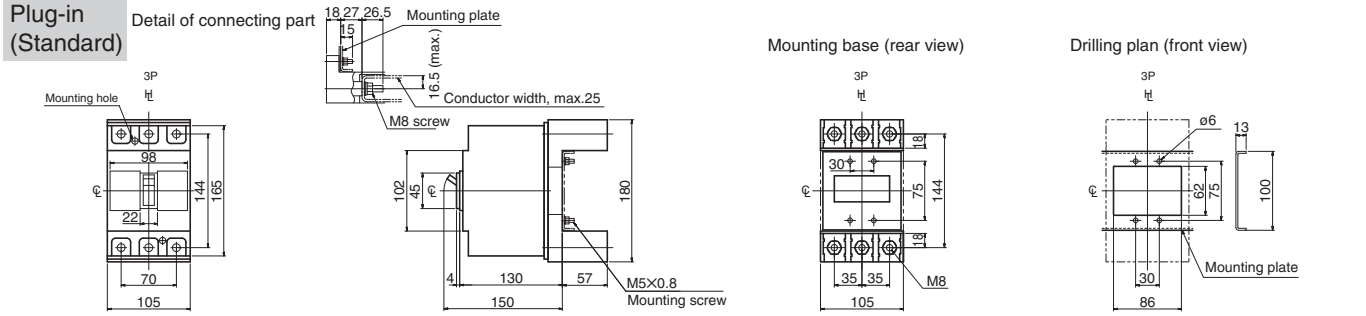

Plug-in (High-performance)

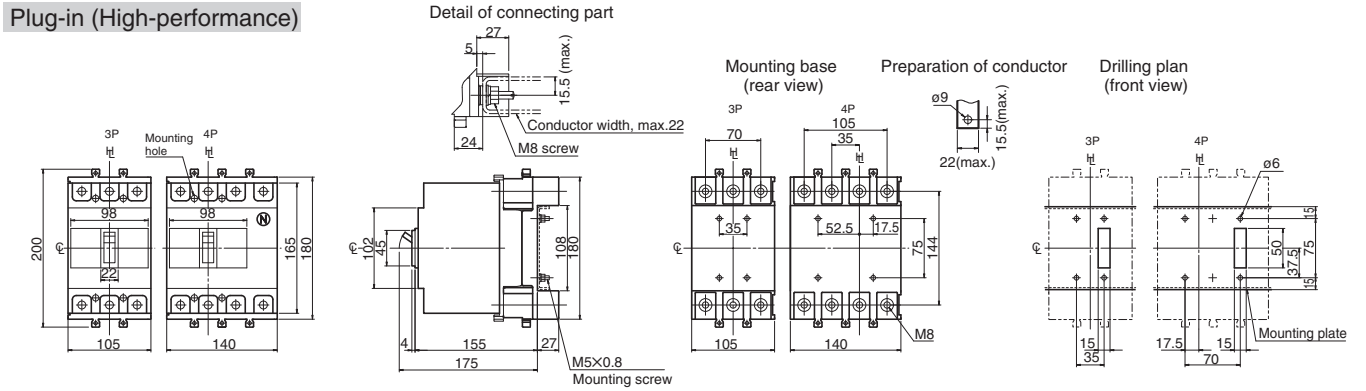

Flush-mounted

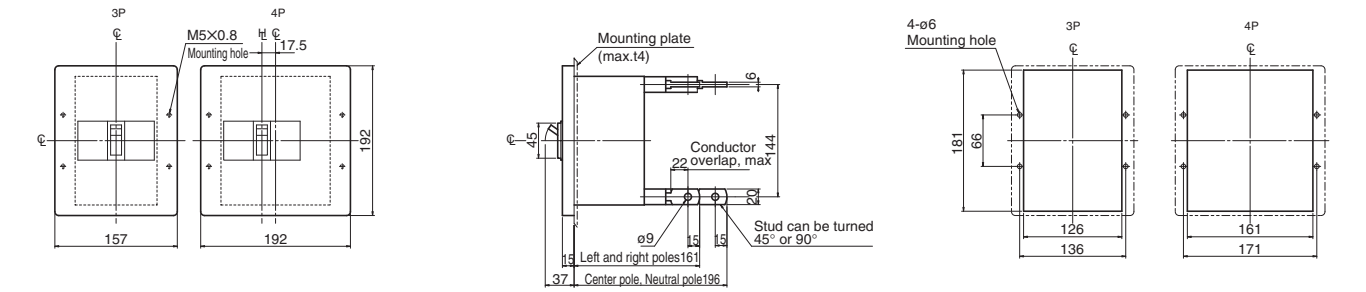

Note: Studs are factory installed in horizontal direction both on the line and load sides.

7 Characteristics and Outline Dimensions *TemBreak2*

Molded Case Circuit Breakers (225A Frame)

H225-NF, L225-NF

Ratings and Specifications

Type			H225-NF		L225-NF	
Number of poles			3	4	3	4
■Ratings						
Rated current, A			125		125	
Calibrated at 45°C			150		150	
			175		175	
			200		200	
			225		225	
Rated insulation voltage〔U_i〕 V			690		690	
Rated impulse withstand voltage〔U_{imp}〕 kV			8		8	
■Rated breaking capacity, kA						
NK	AC	690V	20/15		25/20	
I_{cu}/I_{cs}(sym)		450V	120/80		180/135	
		240V	150/150		200/150㉛	
	① DC	250V	—		—	
IEC60947-2	AC	690V	20/15		25/20	
I_{cu}/I_{cs}(sym)		500V	45/45		65/65	
		440V	120/80		180/135	
		415V	125/85		200/150	
		380V	125/85		200/150	
		240V	150/150		200/150	
	① DC	250V	40/40		40/40	
		125V	40/40		40/40	
■Rated short time withstand current, kA			—		—	
Weight (◉ marked standard type) kg			2.4	3.2	2.4	3.2
■Connections and Mountings						
Front-connected (FC)	Terminal screws		◉		◉	
	With extension bars		○ ㊸		○ ㊸	
Rear-connected (RC)	Bolt studs		—		—	
	Flat bar studs		○		○	
Plug-in (PM) For switchboards	Standard (PMC)		○	—	○	—
	High-performance (PMB)		○		○	
For distribution boards (PMC)			—		—	
Flush-mounted (FP) With flat bar studs			○		○	
Draw-out type (DR)			—		—	
TemPlug70 (PG)			▲	—	—	
TemPlug45B (PG4)			—		—	
DIN rail mount			—		—	
Clip-in chassis mount			—		—	
■Accessories (optional)		**Symbol**				
Externally mounted: Motor operator		M C	●		●	
External operating handle	Breaker-mounted	H B	●		●	
	Door-mounted (variable depth)	H P	●		●	
Toggle extension		H A	—		—	
Mechanical interlock Slide type		M S	●		●	
Toggle holder		H H	●		●	
Toggle lock		H L	●		●	
Terminal cover	For front-connected	C F	●		●	
	For rear-connected and plug-in	C R	●		●	
Interpole barrier		B A	● ③		● ③	
Terminal block for lead		T F	●		●	
Door flange		D F	●		●	
■Standard specifications						
Overcurrent trip mechanism			Thermal-magnetic		Thermal-magnetic	
Trip button (color)			Yes (Red)		Yes (Red)	
Handle position indication (ON: Red, OFF: Green)			Yes		Yes	
Suitability for isolation			Yes		Yes	
CE marking			Yes		Yes	

Notes:
◉ : Standard. This configuration used unless otherwise specified. ○ : Optional standard. Specify when ordering.
▲ : Semi-standard. ● : "yes" or "available". — : "no" or "not available". ① : DC rating available on request.
③ : Line side interpole barriers are supplied as standard. (Front connection only)
㉛ : Also applicable to AC415V. ㊸ : For the extension bars, please palce the order separately in parts.

Time/Current characteristic curves

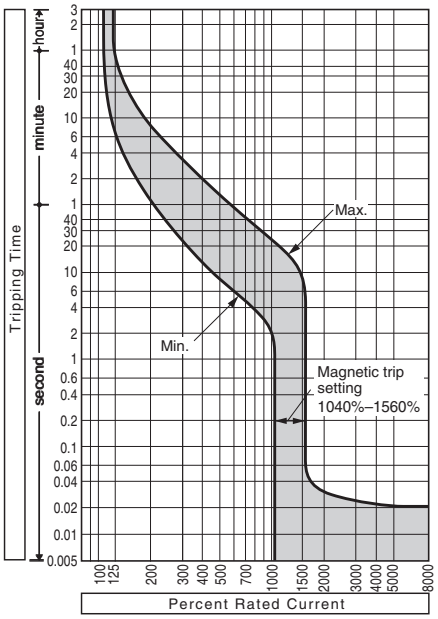

Ambient Compensating Curves

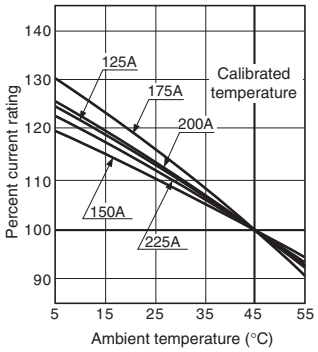

Combinations of Internally Mounted Accessories (Optional)

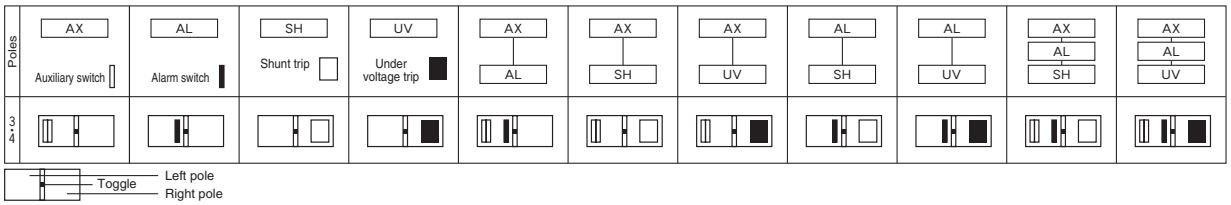

Outline dimensions (mm) — H225-NF, L225-NF

Front-connected

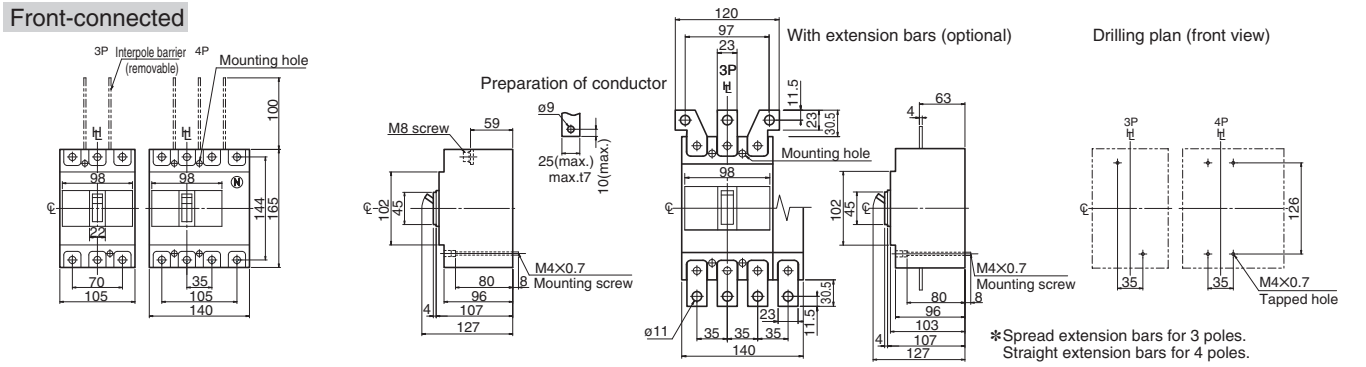

Rear-connected

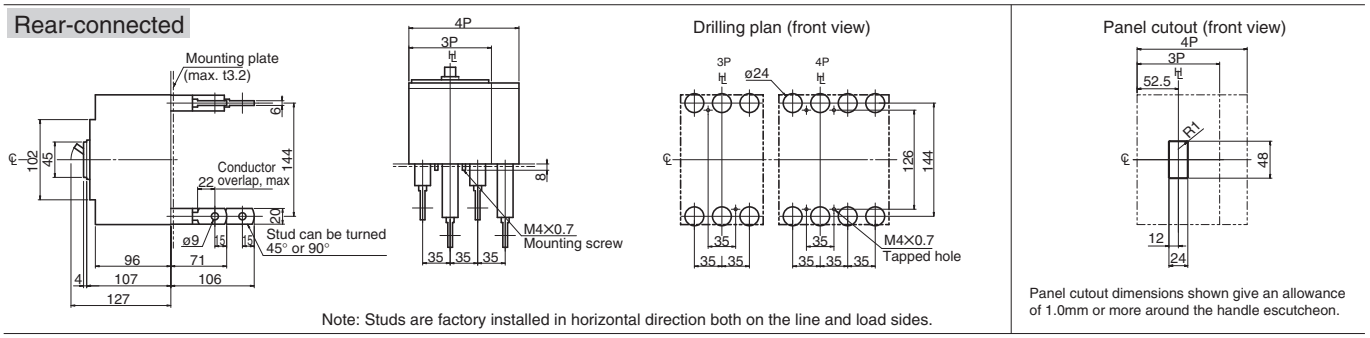

Panel cutout dimensions shown give an allowance of 1.0mm or more around the handle escutcheon.

Note: Studs are factory installed in horizontal direction both on the line and load sides.

Plug-in (Standard)

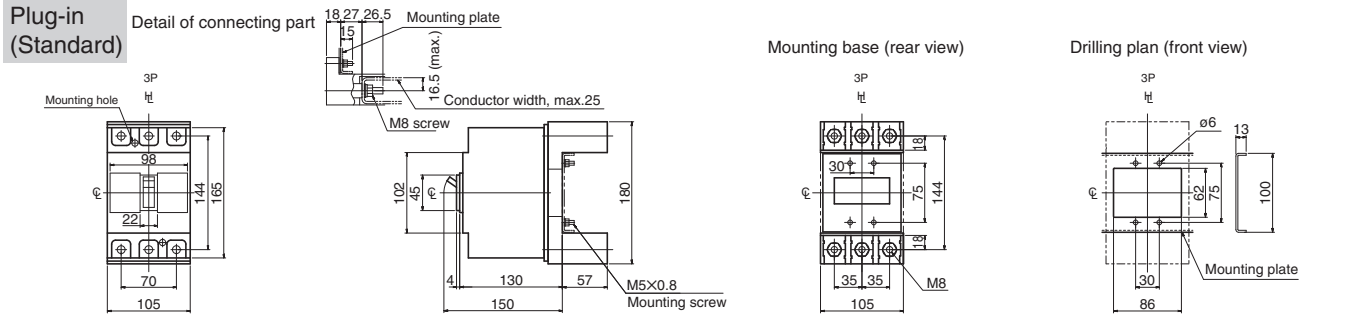

Plug-in (High-performance)

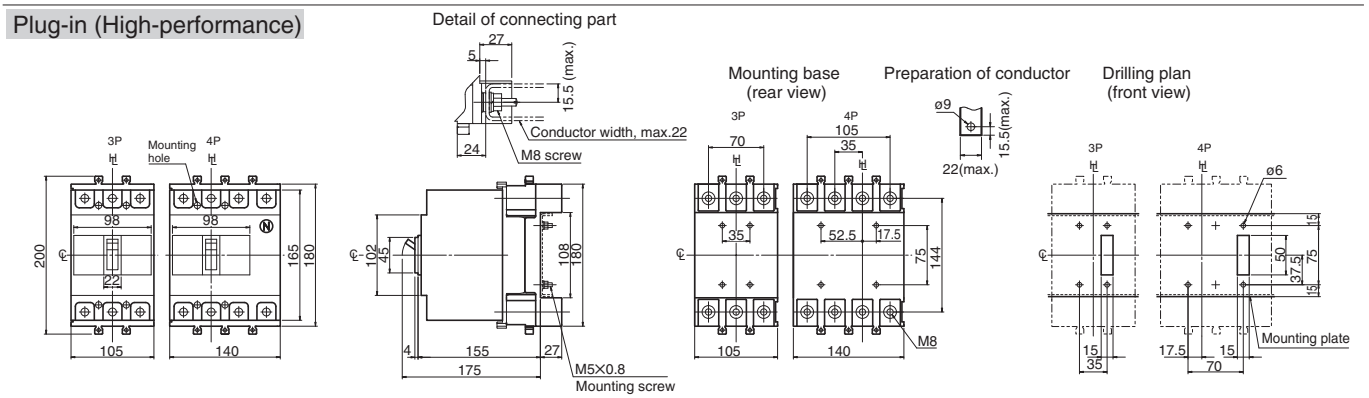

Flush-mounted

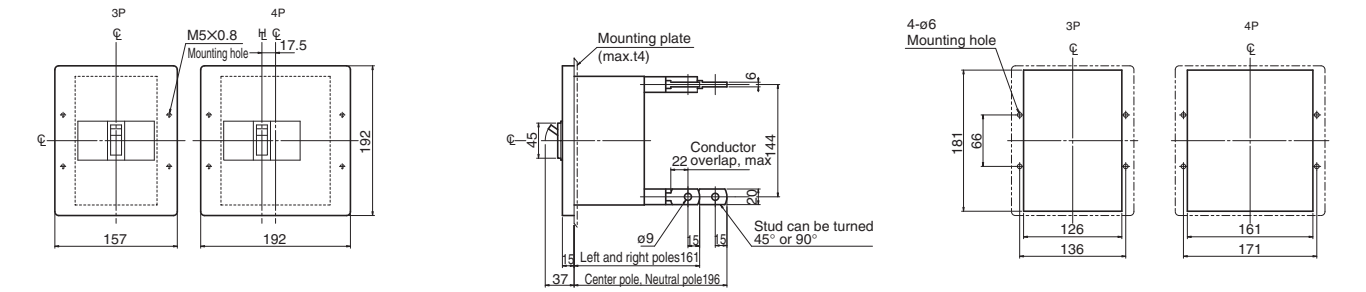

Note: Studs are factory installed in horizontal direction both on the line and load sides.

7 Characteristics and Outline Dimensions *TemBreak2*

Molded Case Circuit Breakers (225A Frame)

S225-GE

Ratings and Specifications

Type			S225-GE	
Number of poles			3	4
■Ratings				
Rated current, A			(Adjustable)	
Calibrated at 45°C			125	
			150	
			175	
			200	
			225	
Rated insulation voltage〔U_i〕 V			690	
Rated impulse withstand voltage〔U_{imp}〕 kV			8	
■Rated breaking capacity, kA				
NK	AC	690V	—	
I_{cu}/I_{cs}(sym)		450V	—	
		240V	—	
	DC	250V	—	
IEC60947-2	AC	690V	7.5/7.5	
I_{cu}/I_{cs}(sym)		500V	25/25	
		440V	50/25	
		415V	65/35	
		380V	65/35	
		240V	85/85	
	DC	250V	—	
		125V	—	
■Rated short time withstand current, kA			—	
Weight (◉ marked standard type) kg			2.3	3.1
■Connections and Mountings				
Front-connected (FC)	Terminal screws		◉	
	With extension bars		○ ㊸	
Rear-connected (RC)	Bolt studs		—	
	Flat bar studs		○	
Plug-in (PM)	For switchboards	Standard (PMC)	○	—
		High-performance (PMB)	○	
	For distribution boards (PMC)		—	
Flush-mounted (FP)	With flat bar studs		○	
Draw-out type (DR)			—	
TemPlug70 (PG)			▲	—
TemPlug45B (PG4)			—	
DIN rail mount			—	
Clip-in chassis mount			—	
■Accessories (optional)		**Symbol**		
Externally mounted: Motor operator		M C	●	
External operating handle	Breaker-mounted	H B	●	
	Door-mounted (variable depth)	H P	●	
Toggle extension		H A	—	
Mechanical interlock	Slide type	M S	●	
Toggle holder		H H	●	
Toggle lock		H L	●	
Terminal cover	For front-connected	C F	●	
	For rear-connected and plug-in	C R	●	
Interpole barrier		B A	● ③	
Terminal block for lead		T F	●	
Door flange		D F	●	
■Standard specifications				
Overcurrent trip mechanism			Electronic ⑳	
Trip button (color)			Yes (Red)	
Handle position indication (ON: Red, OFF: Green)			Yes	
Suitability for isolation			Yes	
CE marking			Yes	

Notes:
◉ : Standard. This configuration used unless otherwise specified. ○ : Optional standard. Specify when ordering.
▲ : Semi-standard. ● : "yes" or "available". — : "no" or "not available".
③ : Line side interpole barriers are supplied as standard. (Front connection only)
⑳ : Optional pretrip alarm function available on request.
㊸ : For the extension bars, please palce the order separately in parts.

Time/Current characteristic curves

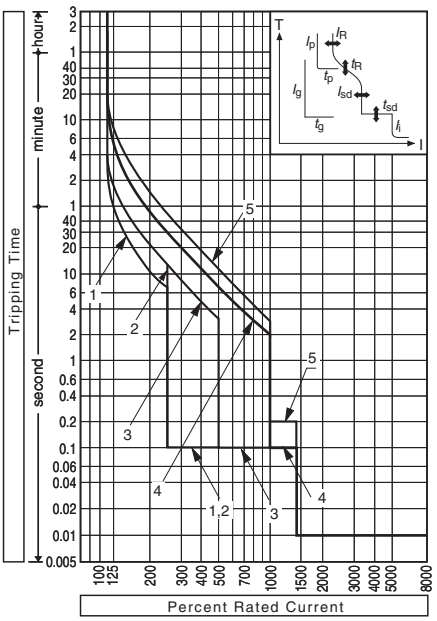

Overcurrent tripping characteristics

Characteristics No.		1	2	3	4	5
Long time-delay pick-up current (A) : (I_R)		CT rated current : (I_{CT}) = 250A 125, 150, 175, 200, 225				
Long time-delay time settings (s) : (t_R)		11	21	21	5	7.5
		at 200%×(I_R)			at 600%×(I_R)	
		Setting tolerance ±20%				
Short time-delay pick-up current (A) : (I_{sd})	(I_R)×	2.5	2.5	5	10	10
		Setting tolerance ±15%				
Short time-delay time settings (s) : (t_{sd})		0.1	0.1	0.1	0.1	0.2
		Total clearing time +50ms, resettable time −20ms				
Instantaneous trip pick-up current (A) : (I_i)		(I_R)×1400% Setting tolerance ±20%				
Option: Preferential trip alarm	Pick-up current (A) : (I_p)	(I_R)×80% Setting tolerance ±10%				
	Time-settings (s) : (t_p)	Definite time-delay characteristic, 40sec. Setting tolerance ±10%				
Neutral protection	Pick-up current (A) : (I_N)	(I_R)×100%				
	Time-settings (s) : (t_N)	(t_N)=(t_R) Same as Long time-delay time settings				

Note: Characteristic No.4 will be applied as standard setting unless otherwise specified.

Combinations of Internally Mounted Accessories (Optional)

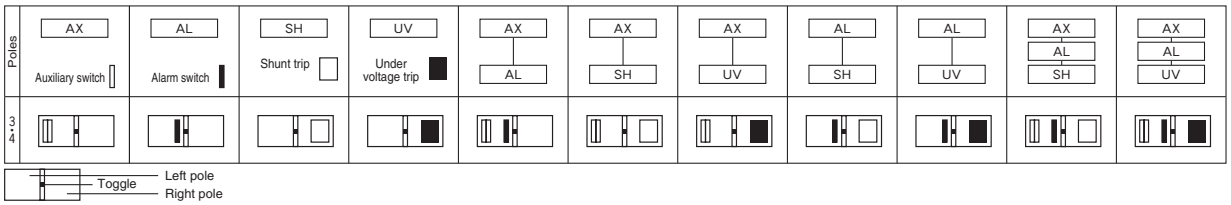

Outline dimensions (mm) S225-GE

Front-connected

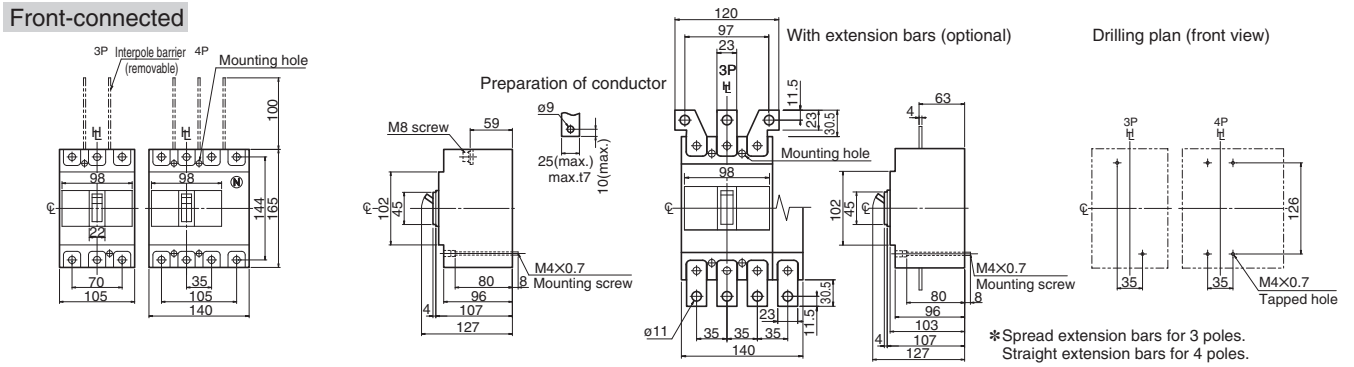

Rear-connected

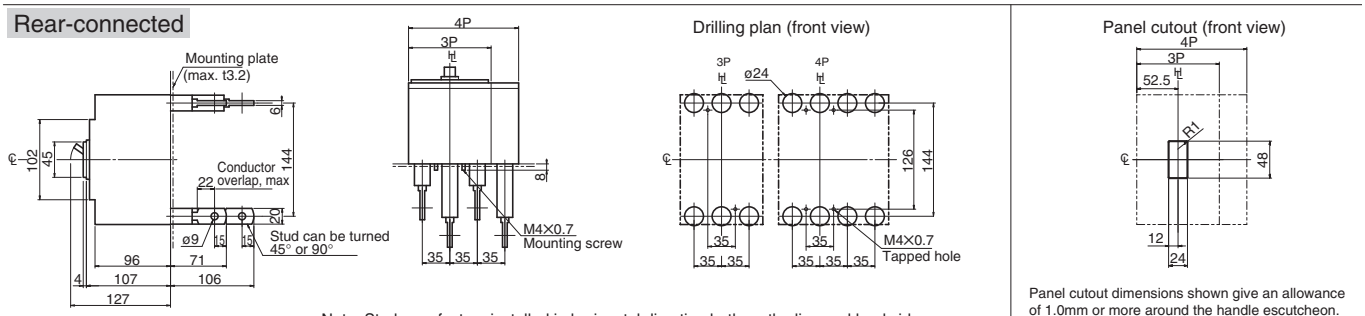

Note: Studs are factory installed in horizontal direction both on the line and load sides.

Panel cutout dimensions shown give an allowance of 1.0mm or more around the handle escutcheon.

Plug-in (Standard)

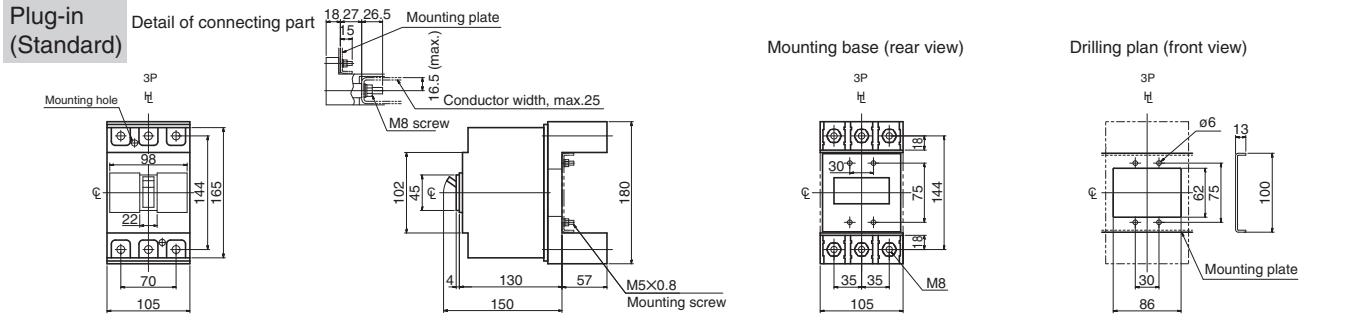

Plug-in (High-performance)

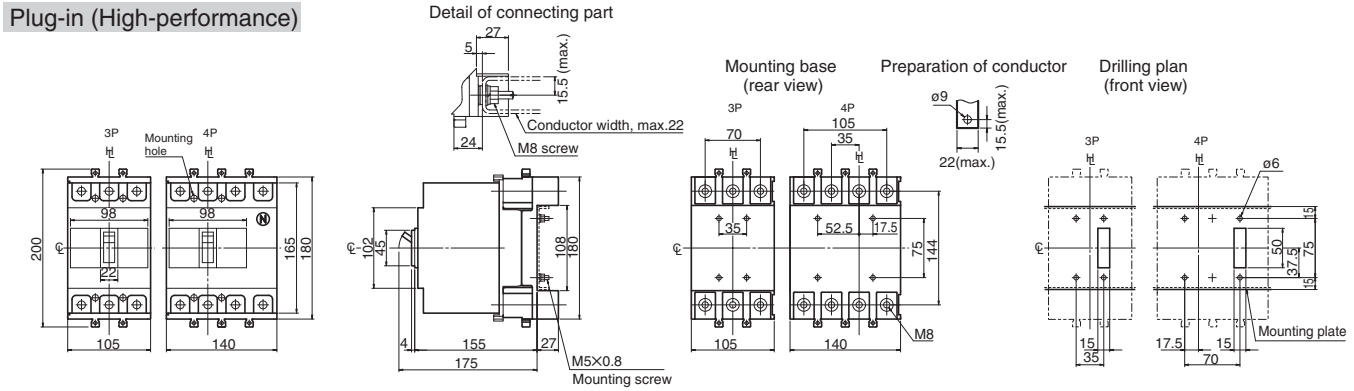

Flush-mounted

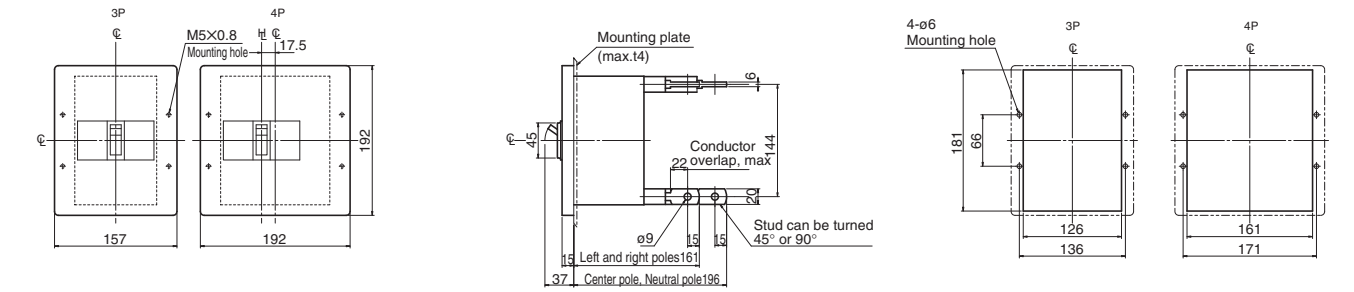

Note: Studs are factory installed in horizontal direction both on the line and load sides.

7 Characteristics and Outline Dimensions *TemBreak2*

Molded Case Circuit Breakers (400A Frame)

S400-NE, S400-GE, S400-PE

Ratings and Specifications

Type			S400-NE		S400-GE		S400-PE	
Number of poles			3	4	3	4	3	4
■Ratings								
Rated current, A			(Adjustable)	(Adjustable)	(Adjustable)	(Adjustable)	(Adjustable)	(Adjustable)
Calibrated at 45°C			125	175	125	175	125	175
			150	200	150	200	150	200
			175	225	175	225	175	225
			200	250	200	250	200	250
			225	300	225	300	225	300
				350		350		350
				400		400		400
Rated insulation voltage〔U_i〕 V			690		690		690	
Rated impulse withstand voltage〔U_{imp}〕 kV			8		8		8	
■Rated breaking capacity, kA								
NK	AC	690V	20/15		20/15		20/15	
I_{cu}/I_{cs}(sym)		450V	45/45		65/50		80/80	
		240V	85/85		100/85		100/85	
	DC	250V	—		—		—	
IEC60947-2	AC	690V	20/15		20/15		20/15	
I_{cu}/I_{cs}(sym)		500V	30/30		30/30		30/30	
		440V	45/45		65/50		80/80	
		415V	50/50		70/50		85/85	
		380V	50/50		70/50		85/85	
		240V	85/85		100/85		100/85	
	DC	250V	—		—		—	
		125V	—		—		—	
■Rated short time withstand current, kA			5 (0.3sec)		5 (0.3sec)		5 (0.3sec)	
Weight (◉ marked standard type) kg			4.3	5.7	4.3	5.7	4.3	5.7
■Connections and Mountings								
Front-connected (FC)	Terminal screws		◉		◉		◉	
	With extension bars		○ (BAR)		○ (BAR)		○ (BAR)	
Rear-connected (RC)	Bolt studs		—		—		—	
	Flat bar studs		○		○		○	
Plug-in (PM) For switchboards	Standard (PMC)		○	—	○	—	—	
	High-performance (PMB)		○		○		○	
For distribution boards (PMC)			—		—		—	
Flush-mounted (FP) With flat bar studs			○		○		○	
Draw-out type (DR)			▲		▲		▲	
TemPlug70 (PG)			○	—	○	—	○	—
TemPlug45B (PG4)			—		—		—	
DIN rail mount			—		—		—	
Clip-in chassis mount			—		—		—	
■Accessories (optional)		Symbol						
Externally mounted: Motor operator		M C	●		●		●	
External operating handle: Breaker-mounted		H B	●		●		●	
External operating handle: Door-mounted (variable depth)		H P	●		●		●	
Toggle extension		H A	●		●		●	
Mechanical interlock⑨ Slide type		M S	●		●		●	
Toggle holder		H H	●		●		●	
Toggle lock		H L						
Terminal cover	For front-connected	C F	●		●		●	
	For rear-connected and plug-in	C R	●		●		●	
Interpole barrier		B A	● ③		● ③		● ③	
Terminal block for lead		T F	●		●		●	
Door flange		D F	●		●		●	
■Standard specifications								
Overcurrent trip mechanism			Electronic ⑯		Electronic ⑯		Electronic ⑯	
Trip button (color)			Yes (Red)		Yes (Red)		Yes (Red)	
Handle position indication (ON: Red, OFF: Green)			Yes		Yes		Yes	
Suitability for isolation			Yes		Yes		Yes	
CE marking			Yes		Yes		Yes	

Notes:
◉ : Standard. This configuration used unless otherwise specified. ○ : Optional standard. Specify when ordering.
▲ : Semi-standard. ● : "yes" or "available". — : "no" or "not available".
③ : Line side interpole barriers are supplied as standard. (Front connection only)
⑨ : The mechanical interlock is not applicable to the draw-out type (DR).
⑯ : Optional pretrip alarm or ground fault trip function available on request.

Time/Current characteristic curves

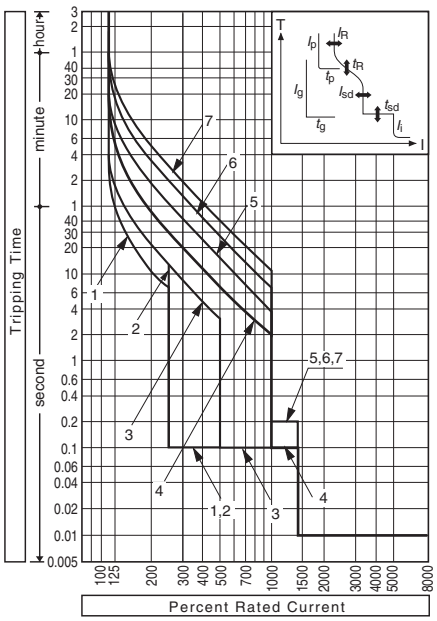

Overcurrent tripping characteristics

Characteristics No.		1	2	3	4	5	6	7
Long time-delay pick-up current (A) : (I_R)		CT rated current : (I_{CT}) = 250A 125, 150, 175, 200, 225						
		CT rated current : (I_{CT}) = 400A 175, 200, 225, 250, 300, 350, 400						
Long time-delay time settings (s) : (t_R)		11	21	21	5	10	19	29
		at 200%×(I_R)			at 600%×(I_R)			
		Setting tolerance ±20%						
Short time-delay pick-up current (A) : (I_{sd})	(I_R)×	2.5	2.5	5	10	10	10	10
		Setting tolerance ±15%						
Short time-delay time settings (s) : (t_{sd})		0.1	0.1	0.1	0.1	0.2	0.2	0.2
		Total clearing time +50ms, resettable time −20ms						
Instantaneous trip pick-up current (A) : (I_i)		(I_R)×1400% Setting tolerance ±20%			Max: (I_{CT})×1300%			
Option: Preferential trip alarm	Pick-up current (A) : (I_p)	(I_R)×80% Setting tolerance ±10%						
	Time-settings (s) : (t_p)	Definite time-delay characteristic, 40sec. Setting tolerance ±10%						
Ground falut trip	Pick-up current (A) : (I_g)	(I_{CT})×20% Setting tolerance ±15% ①						
	Time-settings (s) : (t_g)	Difinite time-delay characteristic, 0.2sec. Total tripping time +50ms, resettable time −20ms.						
Neutral protection	Pick-up current (A) : (I_N)	(I_R)×100% or 50% selectable ②						
	Time-settings (s) : (t_N)	(t_N)=(t_R) Same as Long time-delay time settings						

Note:
①. Ground fault trip is not available when (I_{CT}) is 250A.
②. In case of (I_R)<(I_{CT}), the setting tolerance becomes big when (I_N) is set at (I_R)×50%.
Characteristic No.4 will be applied as standard setting unless otherwise specified.

Combinations of Internally Mounted Accessories (Optional)

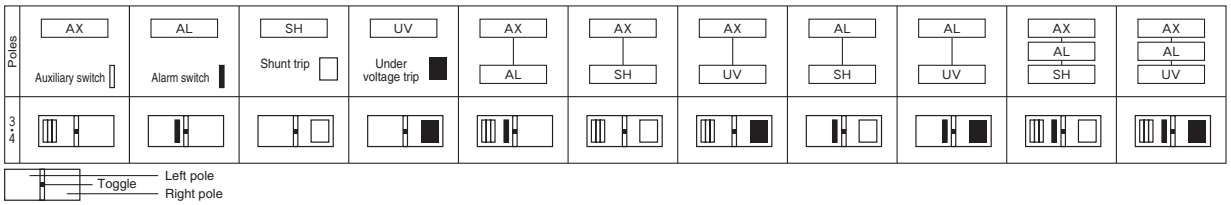

Outline dimensions (mm) — S400-NE, S400-GE, S400-PE

Front-connected

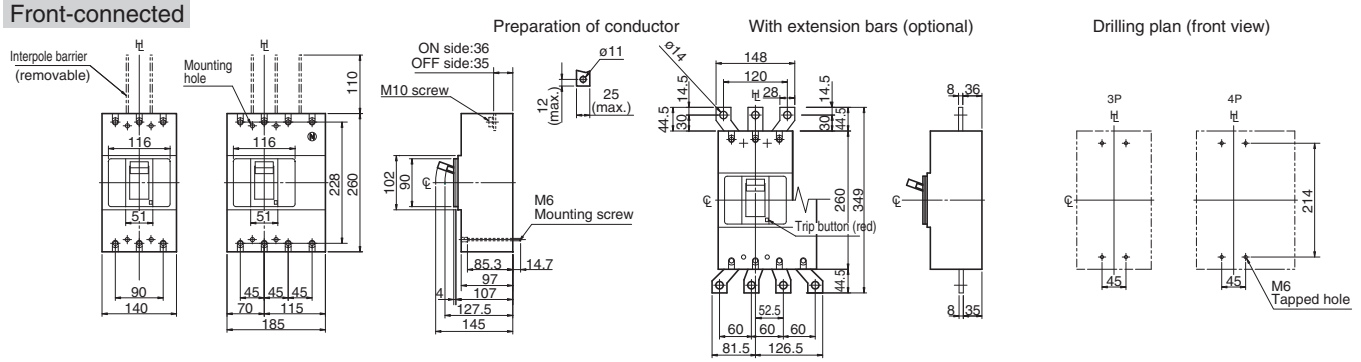

Rear-connected

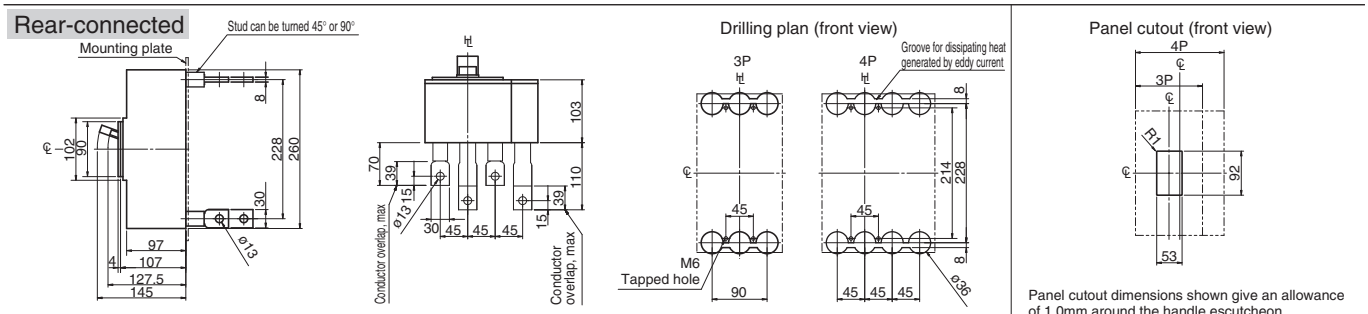

Note: Studs are factory installed in horizontal direction both on the line and load sides.

Panel cutout dimensions shown give an allowance of 1.0mm around the handle escutcheon.

Plug-in (Standard)

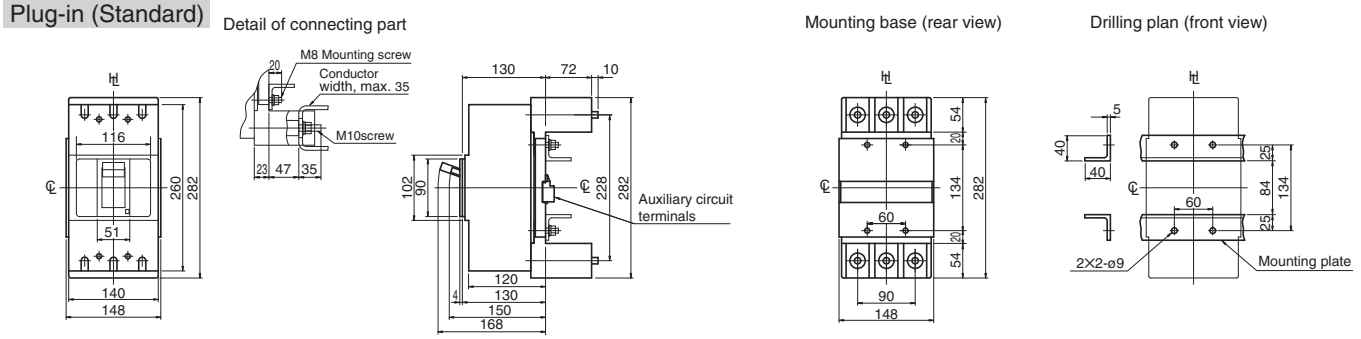

Plug-in (High-performance)

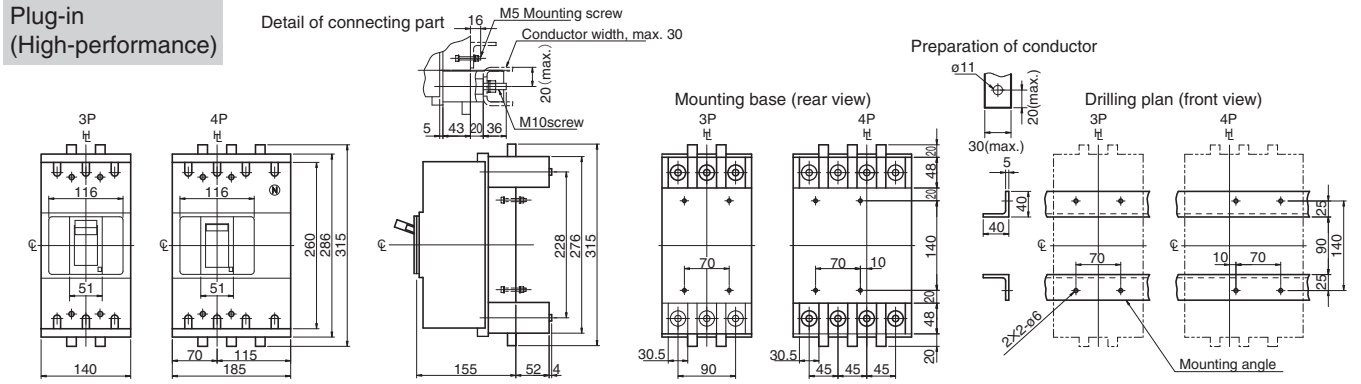

Flush-mounted

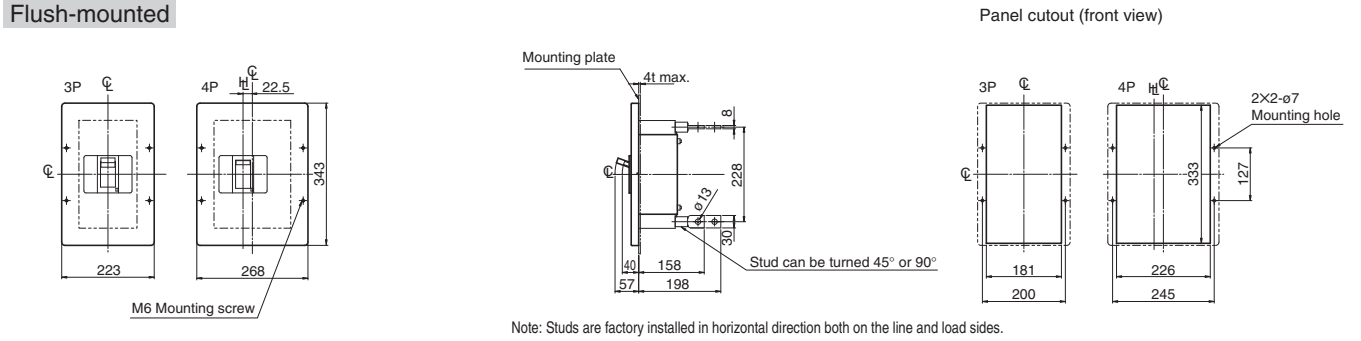

Note: Studs are factory installed in horizontal direction both on the line and load sides.

7 Characteristics and Outline Dimensions *TemBreak2*

Molded Case Circuit Breakers (400A Frame)

H400-NE, L400-NE

Ratings and Specifications

Type			H400-NE		L400-NE	
Number of poles			3	4	3	4
■Ratings						
Rated current, A			(Adjustable)	(Adjustable)	(Adjustable)	(Adjustable)
Calibrated at 45°C			125	175	125	175
			150	200	150	200
			175	225	175	225
			200	250	200	250
			225	300	225	300
				350		350
				400		400
Rated insulation voltage〔U_i〕 V			690		690	
Rated impulse withstand voltage〔U_{imp}〕 kV			8		8	
■Rated breaking capacity, kA						
NK	AC	690V	35/35		50/50	
I_{cu}/I_{cs}(sym)		450V	120/80		180/135	
		240V	150/150		200/150 ㉛	
	DC	250V	—		—	
IEC60947-2	AC	690V	35/35		50/50	
I_{cu}/I_{cs}(sym)		500V	45/45		65/65	
		440V	120/80		180/135	
		415V	125/85		200/150	
		380V	125/85		200/150	
		240V	150/150		200/150	
	DC	250V	—		—	
		125V	—		—	
■Rated short time withstand current, kA			5 (0.3sec)		5 (0.3sec)	
Weight (◉ marked standard type) kg			7.1	9.4	7.1	9.4
■Connections and Mountings						
Front-connected (FC)	Terminal screws		◉		◉	
	With extension bars		○ (BAR)		○ (BAR)	
Rear-connected (RC)	Bolt studs		—		—	
	Flat bar studs		○		○	
Plug-in (PM) For switchboards	Standard (PMC)		○	—	○	—
	High-performance (PMB)		○		○	
For distribution boards (PMC)			—		—	
Flush-mounted (FP) With flat bar studs			○		○	
Draw-out type (DR)			—		—	
TemPlug70 (PG)			—		—	
TemPlug45B (PG4)			—		—	
DIN rail mount			—		—	
Clip-in chassis mount			—		—	
■Accessories (optional)		**Symbol**				
Externally mounted: Motor operator		M C	●		●	
External operating handle: Breaker-mounted		H B	●		●	
External operating handle: Door-mounted (variable depth)		H P	●		●	
Toggle extension		H A	●		●	
Mechanical interlock⑨ Slide type		M S	●		●	
Toggle holder		H H	●		●	
Toggle lock		H L				
Terminal cover	For front-connected	C F	●		●	
	For rear-connected and plug-in	C R	●		●	
Interpole barrier		B A	● ③		● ③	
Terminal block for lead		T F	●		●	
Door flange		D F	●		●	
■Standard specifications						
Overcurrent trip mechanism			Electronic ⑯		Electronic ⑯	
Trip button (color)			Yes (Red)		Yes (Red)	
Handle position indication (ON: Red, OFF: Green)			Yes		Yes	
Suitability for isolation			Yes		Yes	
CE marking			Yes		Yes	

Notes:
◉ : Standard. This configuration used unless otherwise specified. ○ : Optional standard. Specify when ordering.
▲ : Semi-standard. ● : "yes" or "available". — : "no" or "not available".
③ : Line side interpole barriers are supplied as standard. (Front connection only)
⑨ : The mechanical interlock is not applicable to the draw-out type (DR).
⑯ : Optional pretrip alarm or ground fault trip function available on request.
㉛ : Also applicable to AC415V.

Time/Current characteristic curves

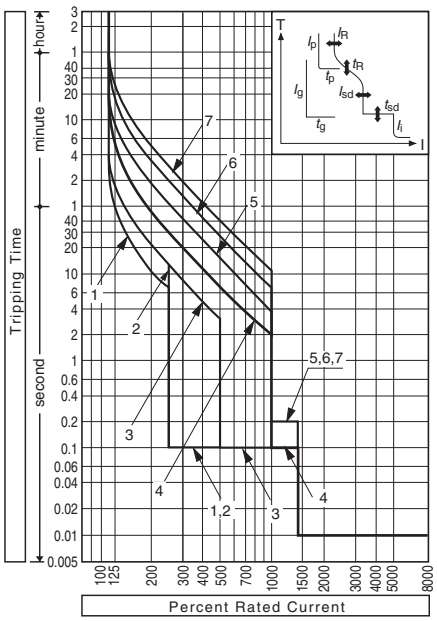

Overcurrent tripping characteristics

Characteristics No.		1	2	3	4	5	6	7
Long time-delay pick-up current (A) : (I_R)		CT rated current : (I_{CT}) = 250A 125, 150, 175, 200, 225						
		CT rated current : (I_{CT}) = 400A 175, 200, 225, 250, 300, 350, 400						
Long time-delay time settings (s) : (t_R)		11	21	21	5	10	19	29
		at 200%×(I_R)			at 600%×(I_R)			
		Setting tolerance ±20%						
Short time-delay pick-up current (A) : (I_{sd})	(I_R)×	2.5	2.5	5	10	10	10	10
		Setting tolerance ±15%						
Short time-delay time settings (s) : (t_{sd})		0.1	0.1	0.1	0.1	0.2	0.2	0.2
		Total clearing time +50ms, resettable time −20ms						
Instantaneous trip pick-up current (A) : (I_i)		(I_R)×1400% Setting tolerance ±20%			Max: (I_{CT})×1300%			
Option: Preferential trip alarm	Pick-up current (A) : (I_p)	(I_R)×80% Setting tolerance ±10%						
	Time-settings (s) : (t_p)	Definite time-delay characteristic, 40sec. Setting tolerance ±10%						
Ground falut trip	Pick-up current (A) : (I_g)	(I_{CT})×20% Setting tolerance ±15% ①						
	Time-settings (s) : (t_g)	Difinite time-delay characteristic, 0.2sec. Total tripping time +50ms, resettable time −20ms.						
Neutral protection	Pick-up current (A) : (I_N)	(I_R)×100% or 50% selectable ②						
	Time-settings (s) : (t_N)	(t_N)=(t_R) Same as Long time-delay time settings						

Note:
①. Ground fault trip is not available when (I_{CT}) is 250A.
②. In case of (I_R)<(I_{CT}), the setting tolerance becomes big when (I_N) is set at (I_R)×50%.
Characteristic No.4 will be applied as standard setting unless otherwise specified.

Combinations of Internally Mounted Accessories (Optional)

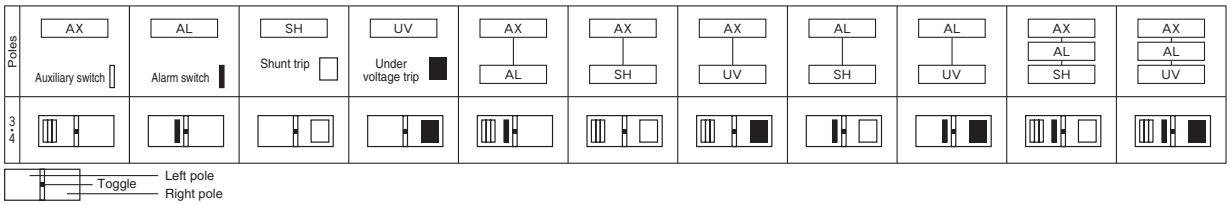

Outline dimensions (mm) H400-NE, L400-NE

Front-connected

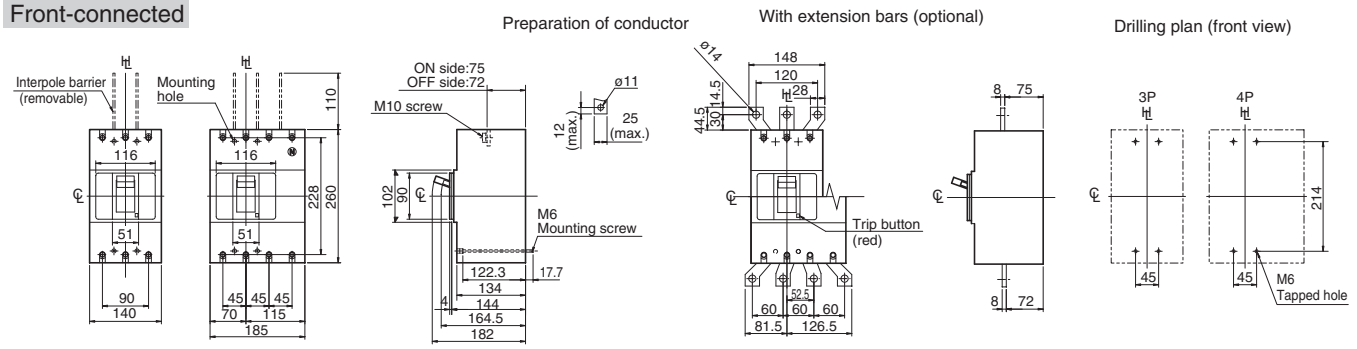

Rear-connected

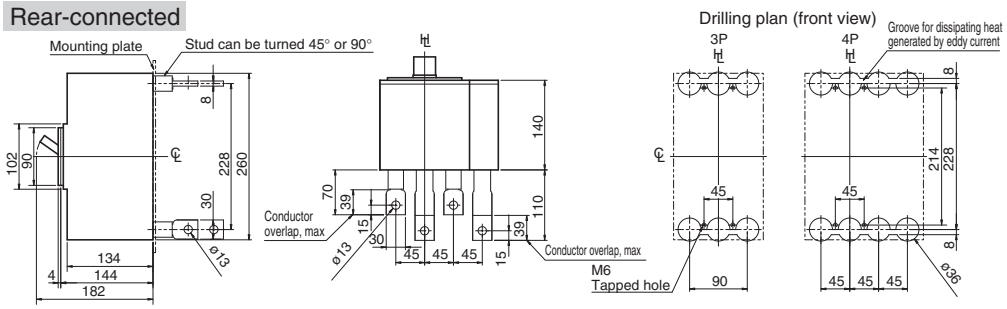

Note: Studs are factory installed in horizontal direction both on the line and load sides.

Panel cutout (front view)

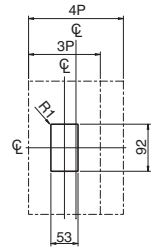

Panel cutout dimensions shown give an allowance of 1.0mm around the handle escutcheon.

Plug-in (Standard)

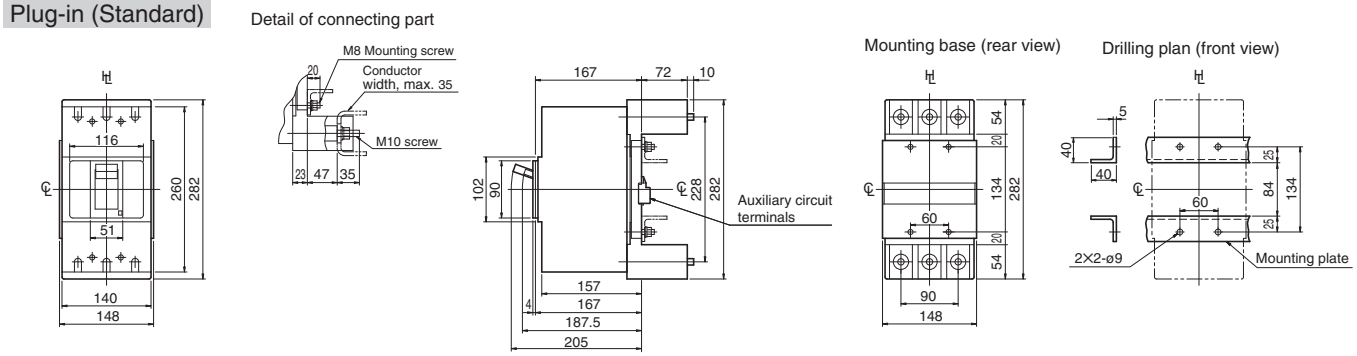

Plug-in (High-performance)

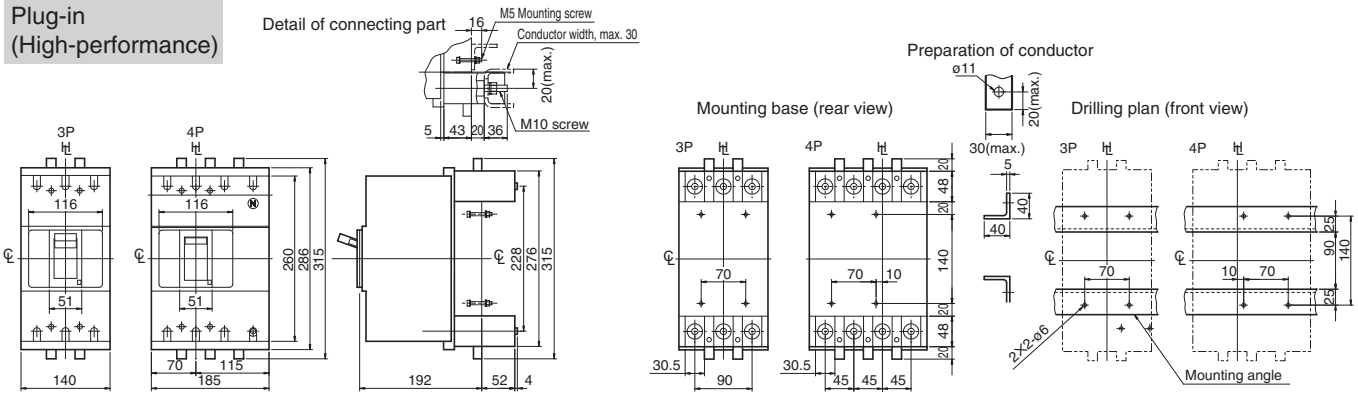

Flush-mounted

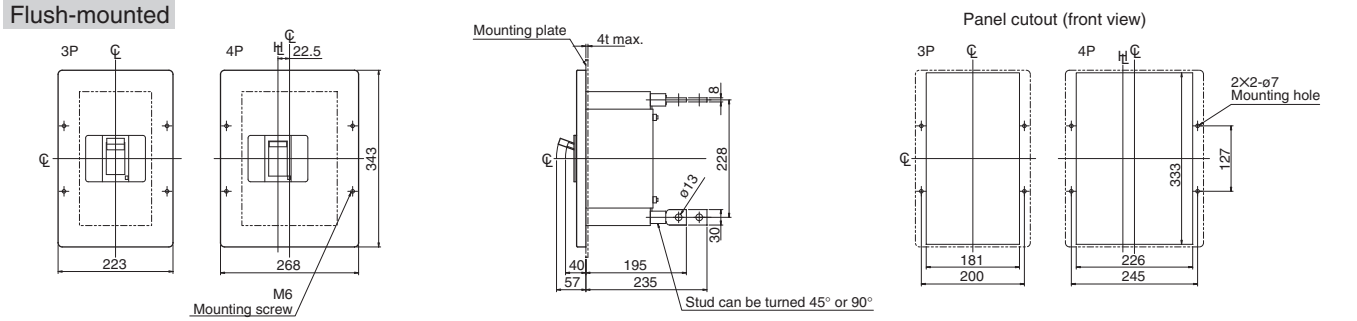

Note: Studs are factory installed in horizontal direction both on the line and load sides.

7 Characteristics and Outline Dimensions *TemBreak2*

Molded Case Circuit Breakers (630A Frame)

S630-CF, S630-NF, S630-RF, S630-PF

Ratings and Specifications

Type			S630-CF		S630-NF		S630-RF		S630-PF	
Number of poles			3	4	3	4	3	4	3	4
■Ratings										
Rated current, A			500	630	500	630	500	630	500	630
Calibrated at 45°C			600		600		600		600	
Rated insulation voltage〔U_i〕 V			690		690		690		690	
Rated impulse withstand voltage〔U_{imp}〕 kV			8		8		8		8	
■Rated breaking capacity, kA										
NK	AC	690V	10/10		20/20		—		—	
I_{cu}/I_{cs}(sym)		450V	30/30		50/50		—		—	
		240V	50/50		85/85		—		—	
	① DC	250V	—		—		—		—	
IEC60947-2	AC	690V	10/10		20/20		25/20		25/20	
I_{cu}/I_{cs}(sym)		500V	15/15		30/30		45/34		45/34	
		440V	30/30		50/50		65/50		85/50	
		415V	36/36		50/50		70/50		100/50	
		380V	36/36		50/50		70/50		100/50	
		240V	50/50		85/85		100/75		125/125	
	① DC	250V	50/50		50/50		50/50		50/50	
		125V	50/50		50/50		50/50		50/50	
■Rated short time withstand current, kA			—		—		—		—	
Weight (◉ marked standard type) kg			8.0	11.0	8.0	11.0	8.0	11.0	8.0	11.0
■Connections and Mountings										
Front-connected (FC)	Terminal screws		—		—		—		—	
	With extension bars		◉		◉		◉		◉	
Rear-connected (RC)	Bolt studs		—		—		—		—	
	Flat bar studs		○		○		○		○	
Plug-in (PM) For switchboards	Standard (PMC)		○	—	○	—	○	—	○	—
	High-performance (PMB)		○		○		○		○	
For distribution boards (PMC)			—		—		—		—	
Flush-mounted (FP) With flat bar studs			○		○		○		○	
Draw-out type (DR)			▲		▲		▲		▲	
TemPlug70 (PG)			○	—	○	—	○	—	○	—
TemPlug45B (PG4)			—		—		—		—	
DIN rail mount			—		—		—		—	
Clip-in chassis mount			—		—		—		—	
■Accessories (optional)		Symbol								
Externally mounted: Motor operator		M C	●		●		●		●	
External operating handle: Breaker-mounted		H B	●		●		●		●	
External operating handle: Door-mounted (variable depth)		H P	●		●		●		●	
Toggle extension ⑨		H A	●		●		●		●	
Mechanical interlock ⑨ Slide type		M S	●		●		●		●	
Toggle holder ⑨		H H	●		●		●		●	
Toggle lock ⑨		H L								
Terminal cover	For front-connected ⑨	C F	●		●		●		●	
	For rear-connected and plug-in	C R	●		●		●		●	
Interpole barrier ⑨		B A	● ③		● ③		● ③		● ③	
Terminal block for lead ⑨		T F	●		●		●		●	
Door flange ⑨		D F	●		●		●		●	
■Standard specifications										
Overcurrent trip mechanism			Thermal-magnetic(adjustable)		Thermal-magnetic(adjustable)		Thermal-magnetic		Thermal-magnetic	
Trip button (color)			Yes (Red)		Yes (Red)		Yes (Red)		Yes (Red)	
Handle position indication (ON: Red, OFF: Green)			Yes		Yes		Yes		Yes	
Suitability for isolation			Yes		Yes		Yes		Yes	
CE marking			Yes		Yes		Yes		Yes	

Notes:
◉ : Standard. This configuration used unless otherwise specified. ○ : Optional standard. Specify when ordering.
▲ : Semi-standard. ● : "yes" or "available". — : "no" or "not available". ① : DC rating available on request.
③ : Line side interpole barriers are supplied as standard. (Front connection only)
⑨ : Not applicable to the draw-out type (DR).

Time/Current characteristic curves

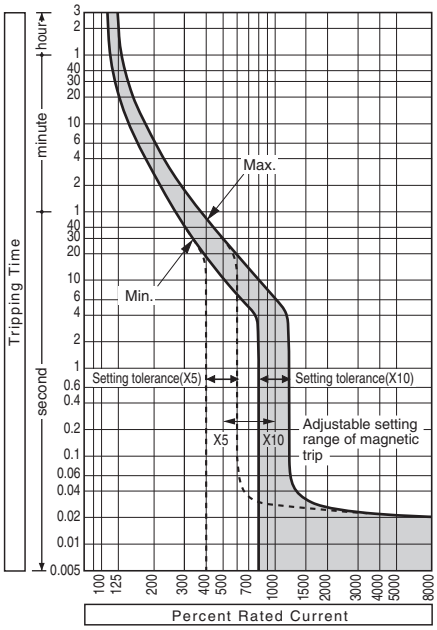

Ambient Compensating Curves

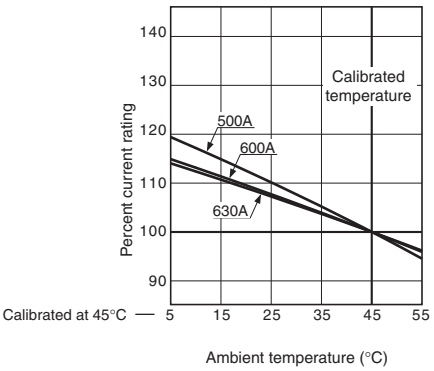

Magnetic trip pickup current

Rated current (A)	Magnetic trip pickup current Adjustable range (A)					
I_n×	10	9	8	7	6	5
500	5000	4500	4000	3500	3000	2500
600	6000	5400	4800	4200	3600	3000
630	6300	5670	5040	4410	3780	3150

Notes:
1. Setting tolerance: ±20%.
2. Unless otherwise stated when ordering, the selector dial is factory set to position "10".
3. The trip pickup current of DC models is not adjustable; the dial position corresponding to the trip pickup current is marked with a white point.

Combinations of Internally Mounted Accessories (Optional)

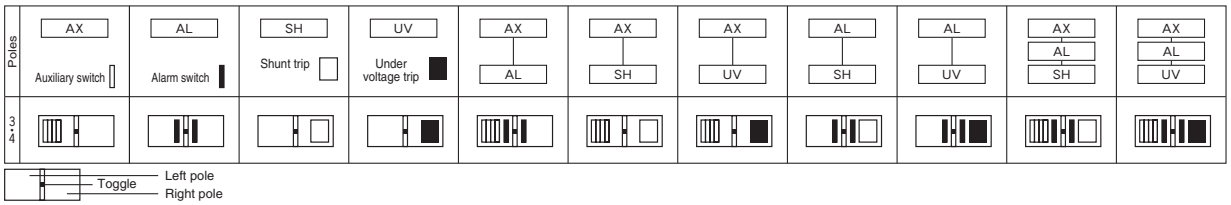

Outline dimensions (mm) S630-CF, S630-NF, S630-RF, S630-PF

Front-connected

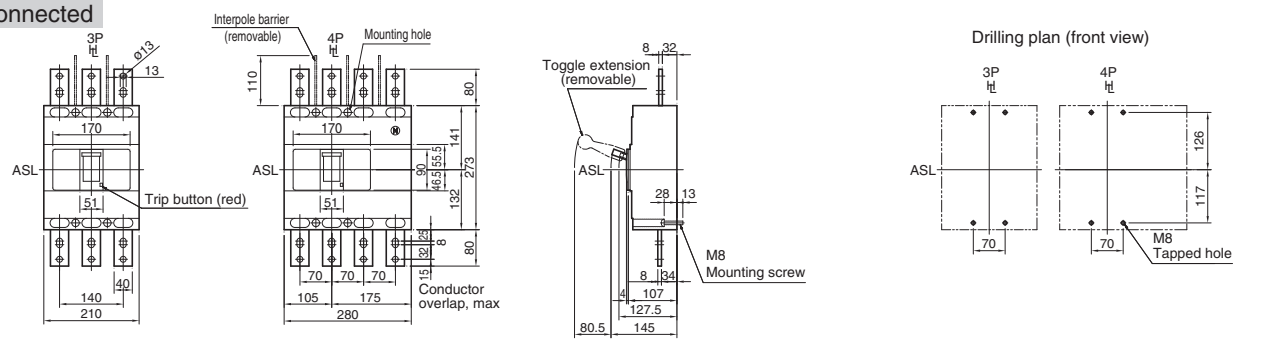

Rear-connected

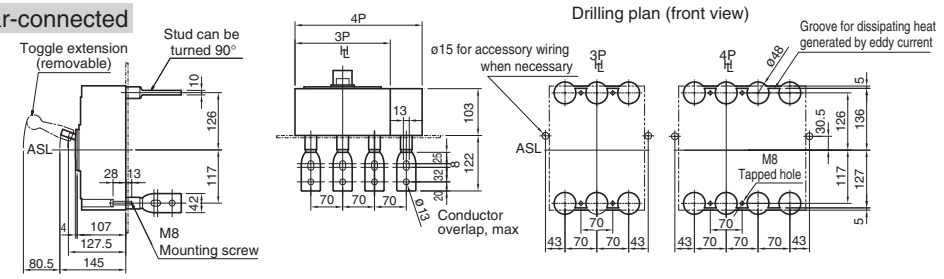

Note: Studs are factory installed in horizontal direction both on the line and load sides.

Panel cutout (front view)

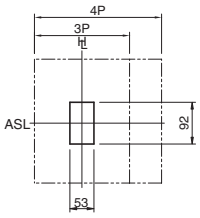

Panel cutout dimensions shown give an allowance of 1.0mm around the handle escutcheon.

Plug-in (Standard)

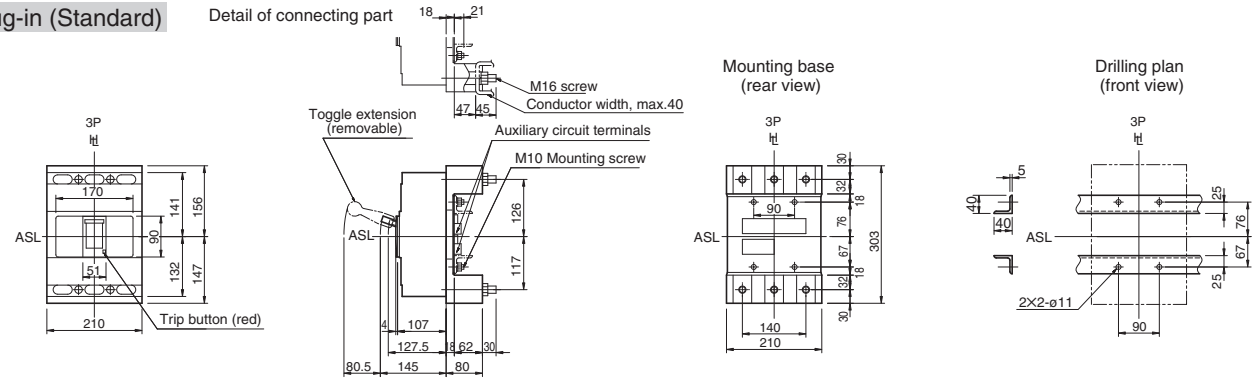

Plug-in (High-performance)

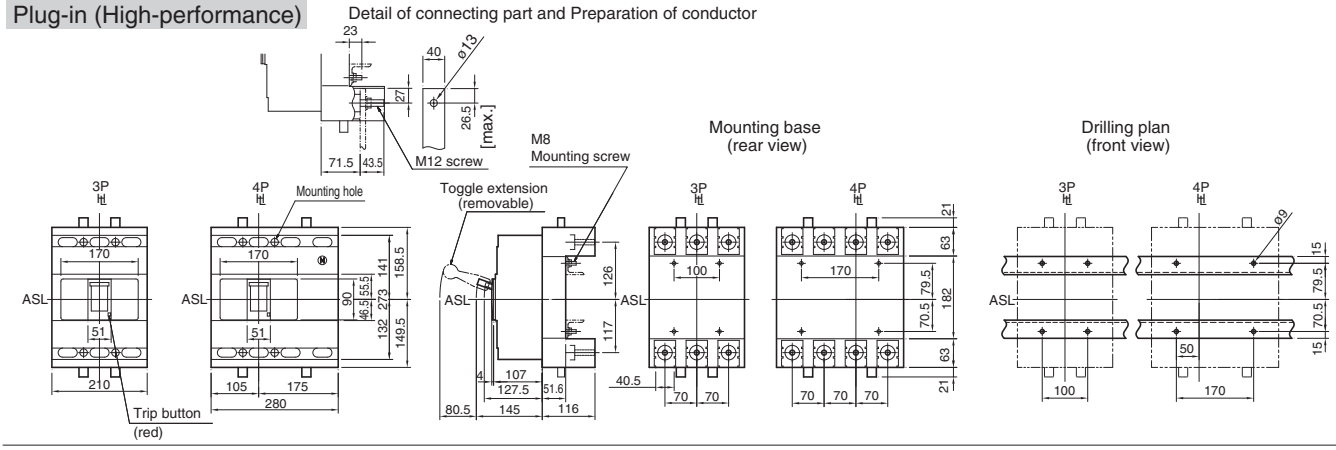

Flush-mounted

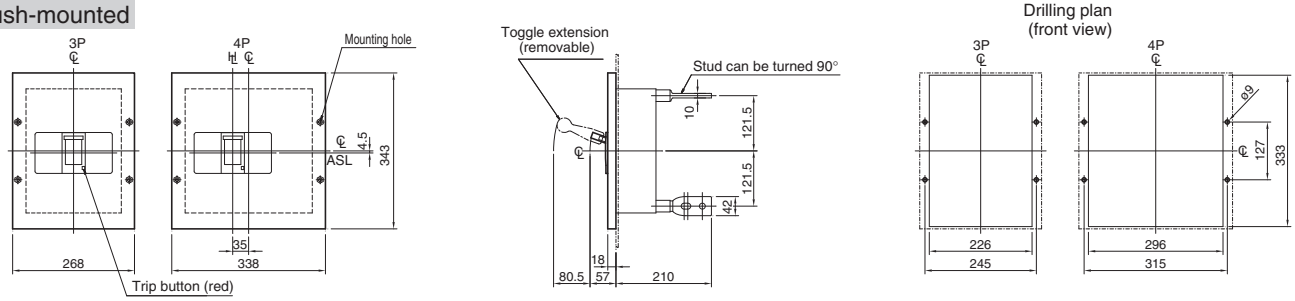

Note: Studs are factory installed in horizontal direction both on the line and load sides.

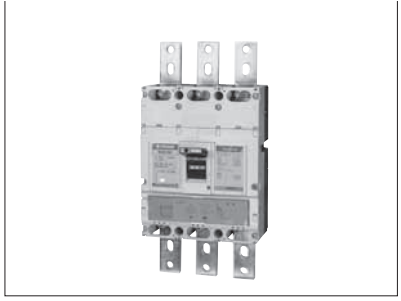

7 Characteristics and Outline Dimensions *TemBreak2*

Molded Case Circuit Breakers (630A Frame)

S630-NE, S630-RE, S630-PE

Ratings and Specifications

Type			S630-NE		S630-RE		S630-PE	
Number of poles			3	4	3	4	3	4
■Ratings								
Rated current, A			(Adjustable)		(Adjustable)		(Adjustable)	
Calibrated at 45°C			250	500	250	500	250	500
			300	600	300	600	300	600
			350	630	350	630	350	630
			400		400		400	
Rated insulation voltage〔U_i〕 V			690		690		690	
Rated impulse withstand voltage〔U_{imp}〕 kV			8		8		8	
■Rated breaking capacity, kA								
NK	AC	690V	20/20		—		—	
I_{cu}/I_{cs}(sym)		450V	50/50		—		—	
		240V	85/85		—		—	
	DC	250V	—		—		—	
IEC60947-2	AC	690V	20/20		25/20		25/20	
I_{cu}/I_{cs}(sym)		500V	30/30		45/34		45/34	
		440V	50/50		65/50		85/50	
		415V	50/50		70/50		100/50	
		380V	50/50		70/50		100/50	
		240V	85/85		100/75		125/125	
	DC	250V	—		—		—	
		125V	—		—		—	
■Rated short time withstand current, kA			10 (0.3sec)		10 (0.3sec)		10 (0.3sec)	
Weight (◉ marked standard type) kg			8.7	11.9	8.7	11.9	8.7	11.9
■Connections and Mountings								
Front-connected (FC)	Terminal screws		—		—		—	
	With extension bars		◉		◉		◉	
Rear-connected (RC)	Bolt studs		—		—		—	
	Flat bar studs		○		○		○	
Plug-in (PM)	For switchboards	Standard (PMC)	○	—	○	—	○	—
		High-performance (PMB)	○		○		○	
	For distribution boards (PMC)		—		—		—	
Flush-mounted (FP)	With flat bar studs		○		○		○	
Draw-out type (DR)			▲		▲		▲	
TemPlug70 (PG)			○	—	○	—	○	—
TemPlug45B (PG4)			—		—		—	
DIN rail mount			—		—		—	
Clip-in chassis mount			—		—		—	
■Accessories (optional)		**Symbol**						
Externally mounted: Motor operator		M C	●		●		●	
External operating handle	Breaker-mounted	H B	●		●		●	
	Door-mounted (variable depth)	H P	●		●		●	
Toggle extension ⑨		H A	●		●		●	
Mechanical interlock ⑨ Slide type		M S	●		●		●	
Toggle holder ⑨		H H	●		●		●	
Toggle lock ⑨		H L						
Terminal cover	For front-connected ⑨	C F	●		●		●	
	For rear-connected and plug-in	C R	●		●		●	
Interpole barrier ⑨		B A	● ③		● ③		● ③	
Terminal block for lead ⑨		T F	●		●		●	
Door flange ⑨		D F	●		●		●	
■Standard specifications								
Overcurrent trip mechanism			Electronic ⑯		Electronic ⑯		Electronic ⑯	
Trip button (color)			Yes (Red)		Yes (Red)		Yes (Red)	
Handle position indication (ON: Red, OFF: Green)			Yes		Yes		Yes	
Suitability for isolation			Yes		Yes		Yes	
CE marking			Yes		Yes		Yes	

Notes:
◉ : Standard. This configuration used unless otherwise specified. ○ : Optional standard. Specify when ordering.
▲ : Semi-standard. ● : "yes" or "available". — : "no" or "not available".
③ : Line side interpole barriers are supplied as standard. (Front connection only)
⑨ : Not applicable to the draw-out type (DR).
⑯ : Optional pretrip alarm or ground fault trip function available on request.

Time/Current characteristic curves

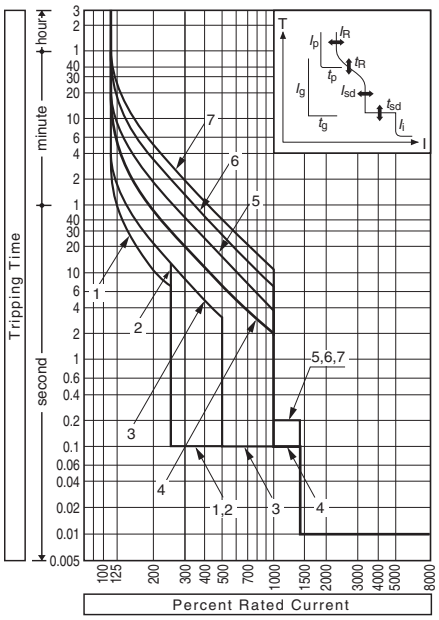

Overcurrent tripping characteristics

Characteristics No.		1	2	3	4	5	6	7
Long time-delay pick-up current (A) : (I_R)		CT rated current : (I_{CT}) = 630A 250, 300, 350, 400, 500, 600, 630						
Long time-delay time settings (s) : (t_R)		11	21	21	5	10	19	29
		at 200%×(I_R)			at 600%×(I_R)			
		Setting tolerance ±20%						
Short time-delay pick-up current (A) : (I_{sd})	(I_R)×	2.5	2.5	5	10	10	10	10
		Setting tolerance ±15%						
Short time-delay time settings (s) : (t_{sd})		0.1	0.1	0.1	0.1	0.2	0.2	0.2
		Total clearing time +50ms, resettable time −20ms						
Instantaneous trip pick-up current (A) : (I_i)		(I_R)×1400% Setting tolerance ±20%			Max: (I_{CT})×1200%			
Option: Preferential trip alarm	Pick-up current (A) : (I_p)	(I_R)×80% Setting tolerance ±10%						
	Time-settings (s) : (t_p)	Definite time-delay characteristic, 40sec. Setting tolerance ±10%						
Ground falut trip	Pick-up current (A) : (I_g)	(I_{CT})×20% Setting tolerance ±15%						
	Time-settings (s) : (t_g)	Difinite time-delay characteristic, 0.2sec. Total tripping time +50ms, resettable time −20ms.						
Neutral protection	Pick-up current (A) : (I_N)	(I_R)×100% or 50% selectable ②						
	Time-settings (s) : (I_N)	(t_N)=(t_R) Same as Long time-delay time settings						

Characteristic No.4 will be applied as standard setting unless otherwise specified.
Note:
②. In case of (I_R)<(I_{CT}), the setting tolerance becomes big when (I_N) is set at (I_R)×50%.

Combinations of Internally Mounted Accessories (Optional)

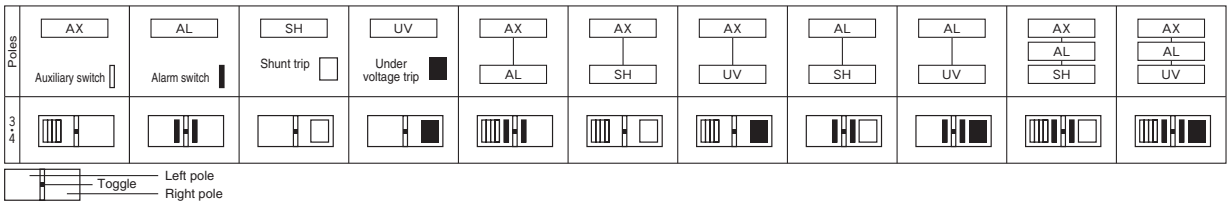

Outline dimensions (mm) — S630-NE, S630-RE, S630-PE

Front-connected

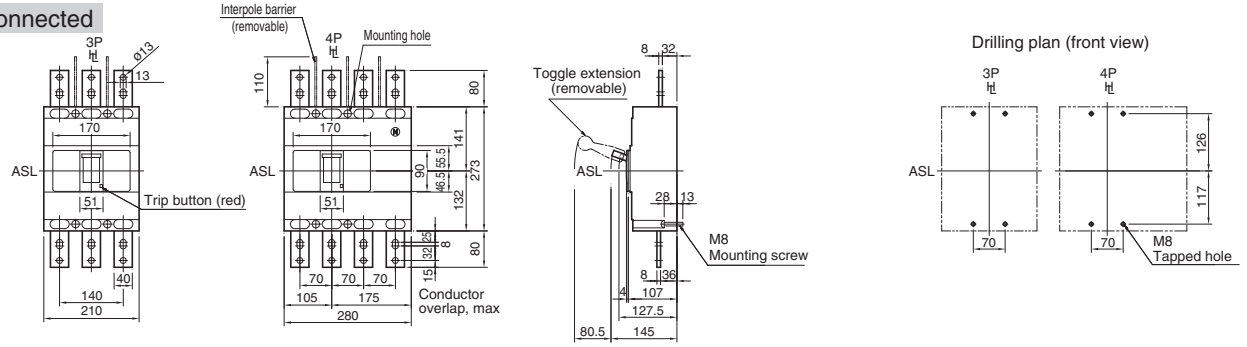

Rear-connected

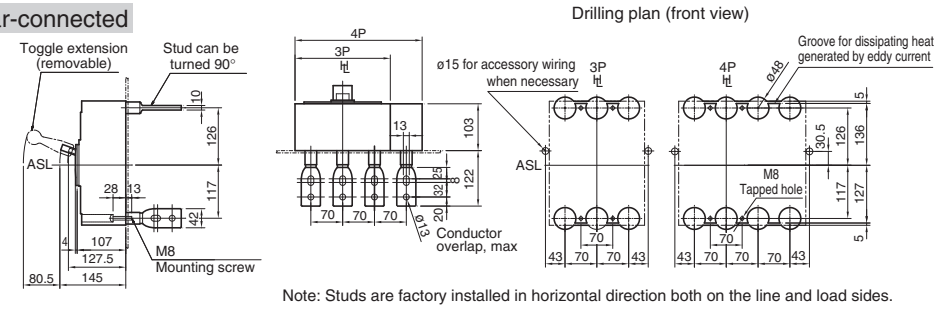

Note: Studs are factory installed in horizontal direction both on the line and load sides.

Panel cutout (front view)

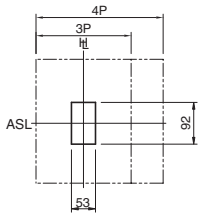

Panel cutout dimensions shown give an allowance of 1.0mm around the handle escutcheon.

Plug-in (Standard)

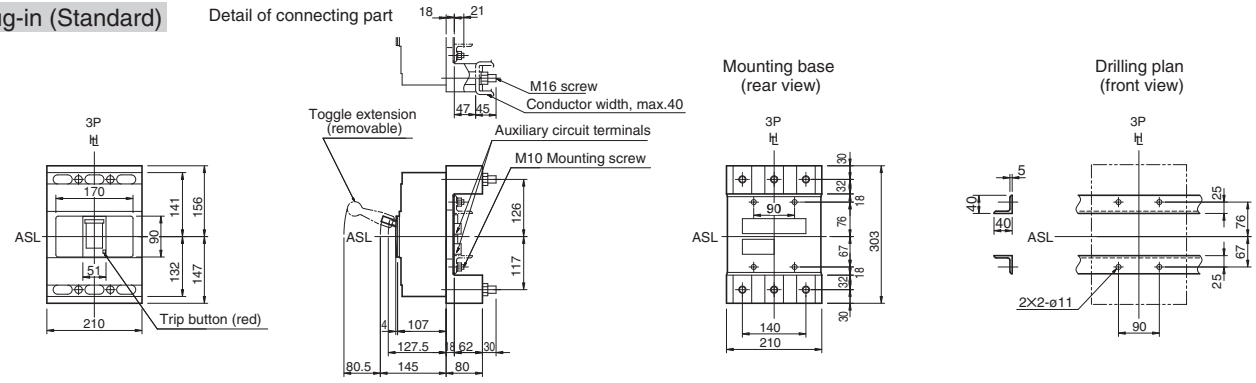

Plug-in (High-performance)

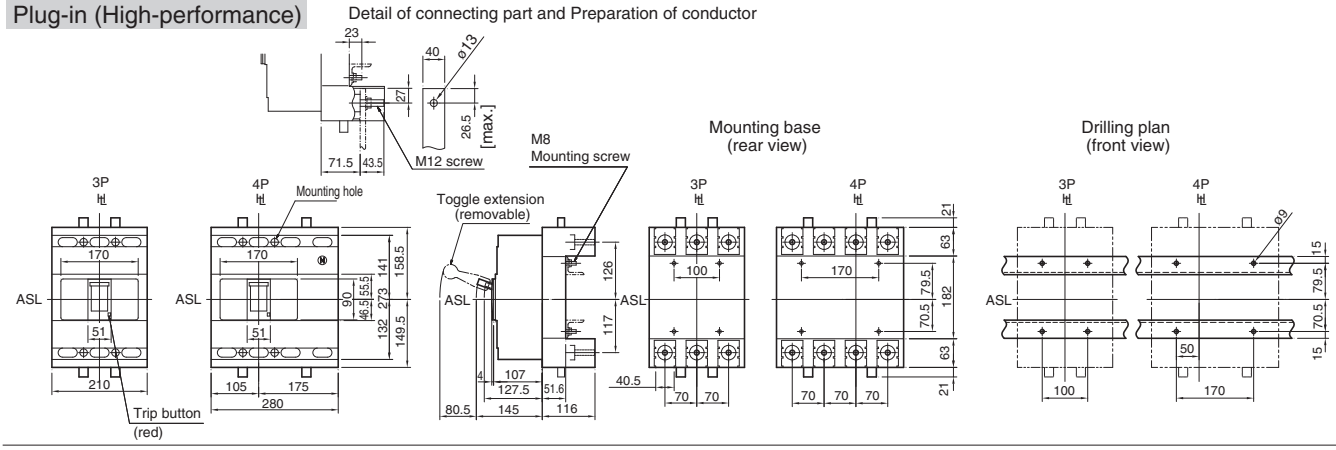

Flush-mounted

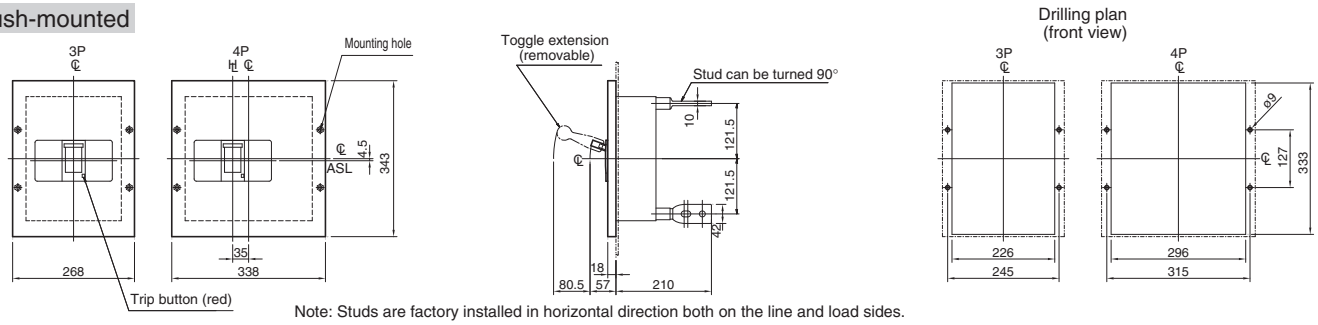

Note: Studs are factory installed in horizontal direction both on the line and load sides.

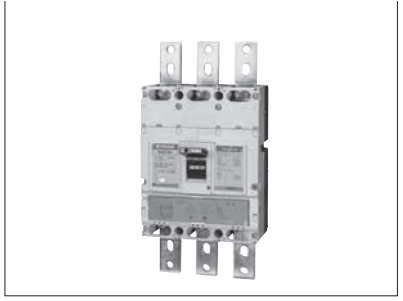

7 Characteristics and Outline Dimensions *TemBreak2*

Molded Case Circuit Breakers (630A Frame)

H630-NE, L630-NE

Ratings and Specifications

Type			H630-NE		L630-NE	
Number of poles			3	4	3	4
■Ratings						
Rated current, A			(Adjustable)		(Adjustable)	
Calibrated at 45°C			250	500	250	500
			300	600	300	600
			350	630	350	630
			400		400	
Rated insulation voltage〔U_i〕 V			690		690	
Rated impulse withstand voltage〔U_{imp}〕 kV			8		8	
■Rated breaking capacity, kA						
NK	AC	690V	25/20		25/20	
I_{cu}/I_{cs}(sym)		450V	125/94		180/135	
		240V	150/150		200/150	
	DC	250V	—		—	
IEC60947-2	AC	690V	25/20		25/20	
I_{cu}/I_{cs}(sym)		500V	45/34		45/34	
		440V	125/94		180/135	
		415V	125/94		200/150	
		380V	125/94		200/150	
		240V	150/150		200/150	
	DC	250V	—		—	
		125V	—		—	
■Rated short time withstand current, kA			10（0.3sec）		10（0.3sec）	
Weight (◉ marked standard type) kg			13.5	19.6	13.5	19.6
■Connections and Mountings						
Front-connected (FC)	Terminal screws		—		—	
	With extension bars		◉		◉	
Rear-connected (RC)	Bolt studs		—		—	
	Flat bar studs		○		○	
Plug-in (PM)	For switchboards	Standard (PMC)	○	—	○	—
		High-performance (PMB)	○		○	
	For distribution boards (PMC)		—		—	
Flush-mounted (FP)	With flat bar studs		○		○	
Draw-out type (DR)			—		—	
TemPlug70 (PG)			—		—	
TemPlug45B (PG4)			—		—	
DIN rail mount			—		—	
Clip-in chassis mount			—		—	
■Accessories (optional)		**Symbol**				
Externally mounted: Motor operator		M C	●		●	
External operating handle	Breaker-mounted	H B	●		●	
	Door-mounted (variable depth)	H P	●		●	
Toggle extension		H A	●		●	
Mechanical interlock⑨ Slide type		M S	●		●	
Toggle holder		H H	●		●	
Toggle lock		H L				
Terminal cover	For front-connected	C F	●		●	
	For rear-connected and plug-in	C R	●		●	
Interpole barrier		B A	● ③		● ③	
Terminal block for lead		T F	●		●	
Door flange		D F	●		●	
■Standard specifications						
Overcurrent trip mechanism			Electronic ⑯		Electronic ⑯	
Trip button (color)			Yes (Red)		Yes (Red)	
Handle position indication (ON: Red, OFF: Green)			Yes		Yes	
Suitability for isolation			Yes		Yes	
CE marking			Yes		Yes	

Notes:
◉ : Standard. This configuration used unless otherwise specified. ○ : Optional standard. Specify when ordering.
▲ : Semi-standard. ● : "yes" or "available". — : "no" or "not available". ③ : Line side interpole barriers are supplied as standard. (Front connection only) ⑨ : The mechanical interlock is not applicable to the draw-out type (DR).
⑯ : Optional pretrip alarm or ground fault trip function available on request.

Time/Current characteristic curves

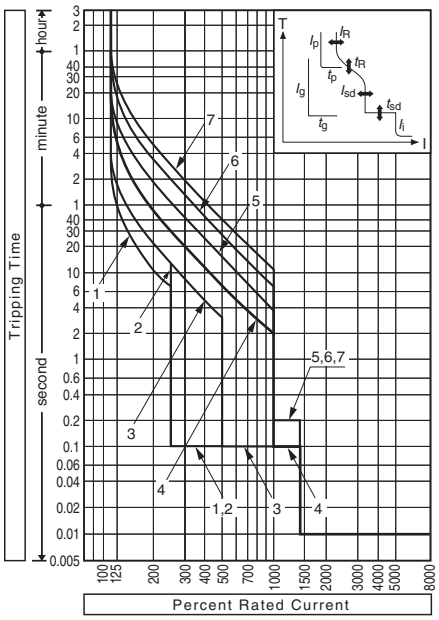

Overcurrent tripping characteristics

Characteristics No.		1	2	3	4	5	6	7
Long time-delay pick-up current (A) : (I_R)		CT rated current : (I_{CT}) = 630A 250, 300, 350, 400, 500, 600, 630						
Long time-delay time settings (s) : (t_R)		11	21	21	5	10	19	29
		at 200%×(I_R)			at 600%×(I_R)			
		Setting tolerance ±20%						
Short time-delay pick-up current (A) : (I_{sd})	(I_R)×	2.5	2.5	5	10	10	10	10
		Setting tolerance ±15%						
Short time-delay time settings (s) : (t_{sd})		0.1	0.1	0.1	0.1	0.2	0.2	0.2
		Total clearing time +50ms, resettable time −20ms						
Instantaneous trip pick-up current (A) : (I_i)		(I_R)×1400% Setting tolerance ±20%			Max: (I_{CT})×1200%			
Option: Preferential trip alarm	Pick-up current (A) : (I_p)	(I_R)×80% Setting tolerance ±10%						
	Time-settings (s) : (t_p)	Definite time-delay characteristic, 40sec. Setting tolerance ±10%						
Ground falut trip	Pick-up current (A) : (I_g)	(I_{CT})×20% Setting tolerance ±15%						
	Time-settings (s) : (t_g)	Difinite time-delay characteristic, 0.2sec. Total tripping time +50ms, resettable time −20ms.						
Neutral protection	Pick-up current (A) : (I_N)	(I_R)×100% or 50% selectable ②						
	Time-settings (s) : (t_N)	(t_N)=(t_R) Same as Long time-delay time settings						

Characteristic No.4 will be applied as standard setting unless otherwise specified.
Note:
②. In case of (I_R)<(I_{CT}), the setting tolerance becomes big when (I_N) is set at (I_R)×50%.

Combinations of Internally Mounted Accessories（Optional）

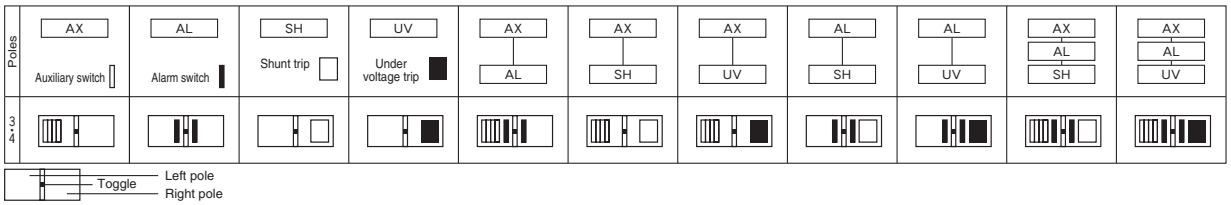

Outline dimensions (mm) — H630-NE, L630-NE

Front-connected

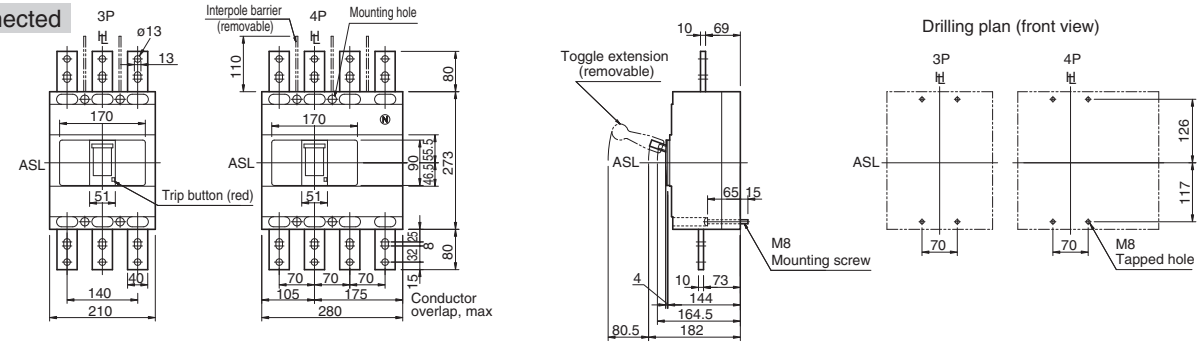

Rear-connected

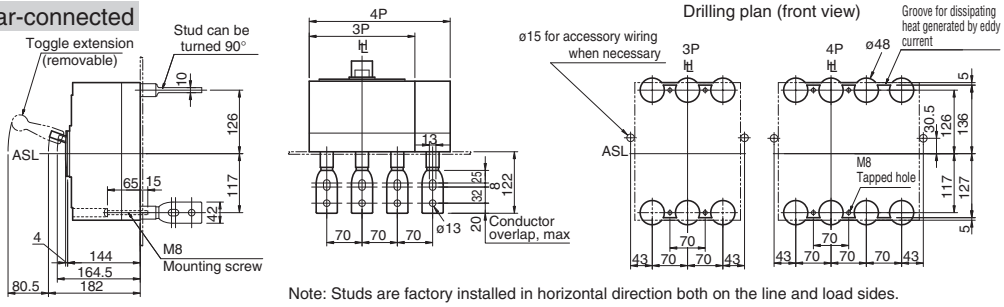

Note: Studs are factory installed in horizontal direction both on the line and load sides.

Panel cutout (front view)

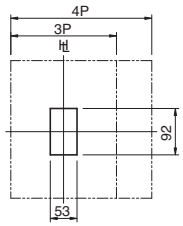

Panel cutout dimensions shown give an allowance of 1.0mm around the handle escutcheon.

Plug-in (Standard)

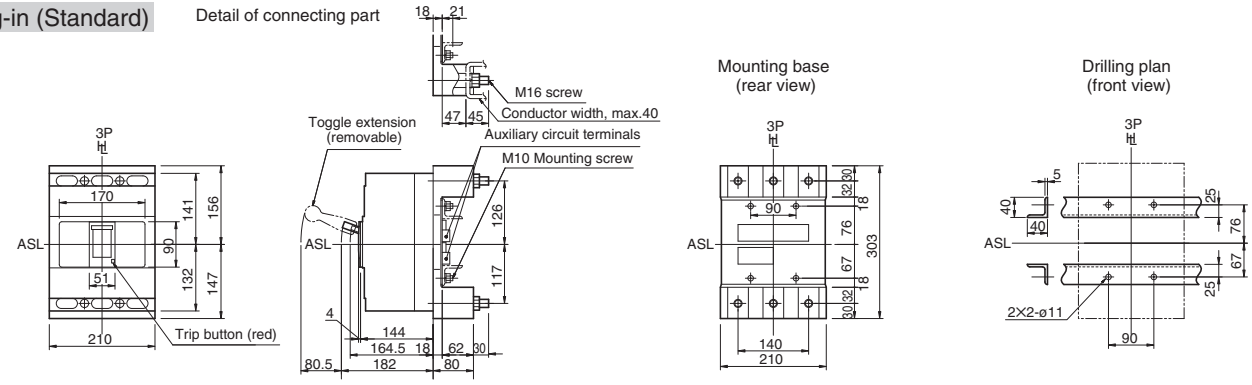

Plug-in (High-performance)

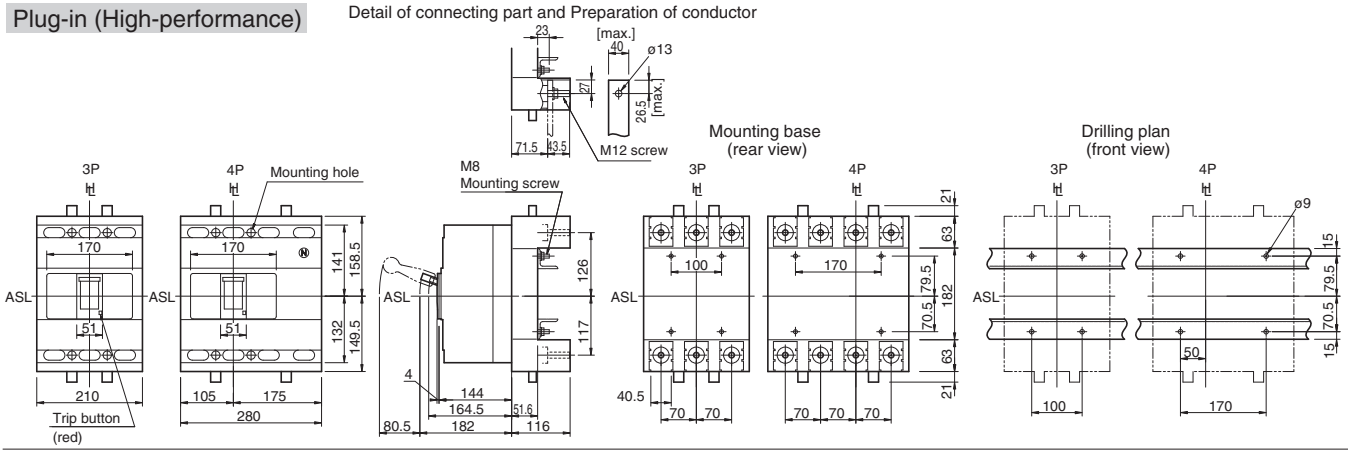

Flush-mounted

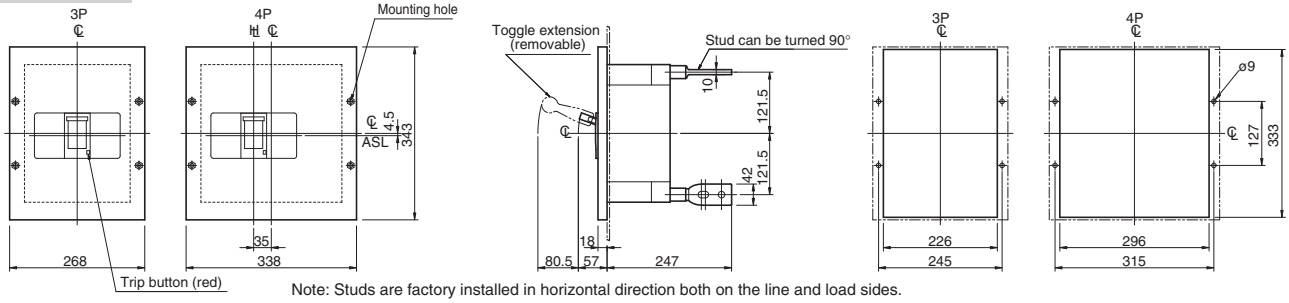

Note: Studs are factory installed in horizontal direction both on the line and load sides.

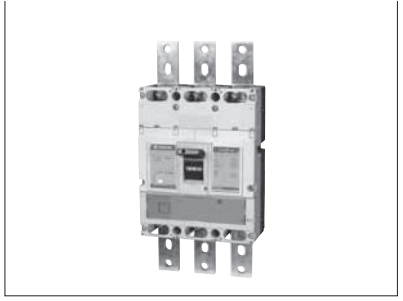

7 Characteristics and Outline Dimensions *TemBreak2*

Molded Case Circuit Breakers (800A Frame)

S800-CF, S800-NF, S800-RF, S800-PF

Ratings and Specifications

Type			S800-CF		S800-NF		S800-RF		S800-PF	
Number of poles			3	4	3	4	3	4	3	4
■Ratings										
Rated current, A			700		700		700		700	
Calibrated at 45°C			800		800		800		800	
Rated insulation voltage〔U_i〕 V			690		690		690		690	
Rated impulse withstand voltage〔U_{imp}〕 kV			8		8		8		8	
■Rated breaking capacity, kA										
NK	AC	690V	10/10		20/20		—		—	
I_{cu}/I_{cs}(sym)		450V	30/30		50/50		—		—	
		240V	50/50		85/85		—		—	
	① DC	250V	—		—		—		—	
IEC60947-2	AC	690V	10/10		20/20		25/20		25/20	
I_{cu}/I_{cs}(sym)		500V	15/15		30/30		45/34		45/34	
		440V	30/30		50/50		65/50		85/50	
		415V	36/36		50/50		70/50		100/50	
		380V	36/36		50/50		70/50		100/50	
		240V	50/50		85/85		100/75		125/125	
	① DC	250V	50/50		50/50		50/50		50/50	
		125V	50/50		50/50		50/50		50/50	
■Rated short time withstand current, kA			—		—		—		—	
Weight (◉ marked standard type) kg			8.5	11.5	8.5	11.5	8.5	11.5	8.5	11.5
■Connections and Mountings										
Front-connected (FC)	Terminal screws		—		—		—		—	
	With extension bars		◉		◉		◉		◉	
Rear-connected (RC)	Bolt studs		—		—		—		—	
	Flat bar studs		○		○		○		○	
Plug-in (PM)	For switchboards	Standard (PMC)	○	—	○	—	○	—	○	—
		High-performance (PMB)	○		○		○		○	
	For distribution boards (PMC)		—		—		—		—	
Flush-mounted (FP)	With flat bar studs		○		○		○		○	
Draw-out type (DR)			▲		▲		▲		▲	
TemPlug70 (PG)			—		—		—		—	
TemPlug45B (PG4)			—		—		—		—	
DIN rail mount			—		—		—		—	
Clip-in chassis mount			—		—		—		—	
■Accessories (optional)		**Symbol**								
Externally mounted: Motor operator		M C	●		●		●		●	
External operating handle	Breaker-mounted	H B	●		●		●		●	
	Door-mounted (variable depth)	H P	●		●		●		●	
Toggle extension ⑨		H A	●		●		●		●	
Mechanical interlock ⑨ Slide type		M S	●		●		●		●	
Toggle holder ⑨		H H	●		●		●		●	
Toggle lock ⑨		H L								
Terminal cover	For front-connected ⑨	C F	●		●		●		●	
	For rear-connected and plug-in	C R	●		●		●		●	
Interpole barrier ⑨		B A	● ③		● ③		● ③		● ③	
Terminal block for lead ⑨		T F	●		●		●		●	
Door flange ⑨		D F	●		●		●		●	
■Standard specifications										
Overcurrent trip mechanism			Thermal-magnetic(adjustable)		Thermal-magnetic(adjustable)		Thermal-magnetic(adjustable)		Thermal-magnetic(adjustable)	
Trip button (color)			Yes (Red)		Yes (Red)		Yes (Red)		Yes (Red)	
Handle position indication (ON: Red, OFF: Green)			Yes		Yes		Yes		Yes	
Suitability for isolation			Yes		Yes		Yes		Yes	
CE marking			Yes		Yes		Yes		Yes	

Notes:
◉ : Standard. This configuration used unless otherwise specified. ○ : Optional standard. Specify when ordering.
▲ : Semi-standard. ● : "yes" or "available". — : "no" or "not available". ① : DC rating available on request.
③ : Line side interpole barriers are supplied as standard. (Front connection only)
⑨ : Not applicable to the draw-out type (DR).

Time/Current characteristic curves

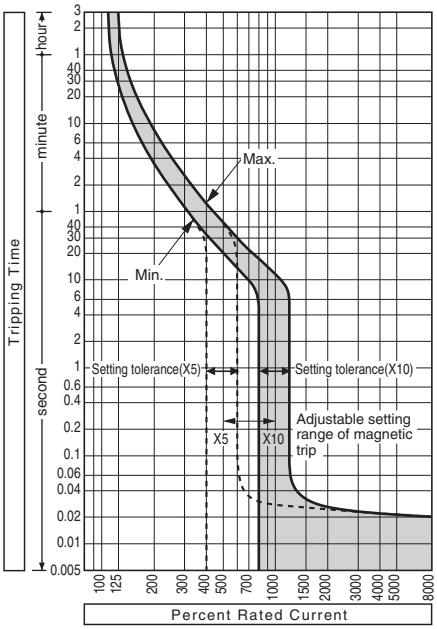

Ambient Compensating Curves

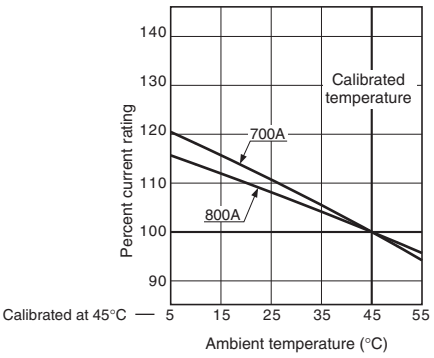

Magnetic trip pickup current

Rated current (A)	Magnetic trip pickup current Adjustable range (A)					
I_n×	10	9	8	7	6	5
700	7000	6300	5600	4900	4200	3500
800	8000	7200	6400	5600	4800	4000

Notes:
1. Setting tolerance: ±20%.
2. Unless otherwise stated when ordering, the selector dial is factory set to position "10".
3. The trip pickup current of DC models is not adjustable; the dial position corresponding to the trip pickup current is marked with a white point.

Combinations of Internally Mounted Accessories (Optional)

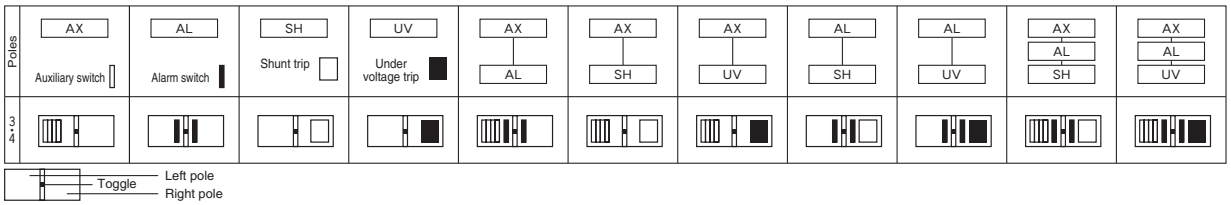

Outline dimensions (mm) — S800-CF, S800-NF, S800-RF, S800-PF

Front-connected

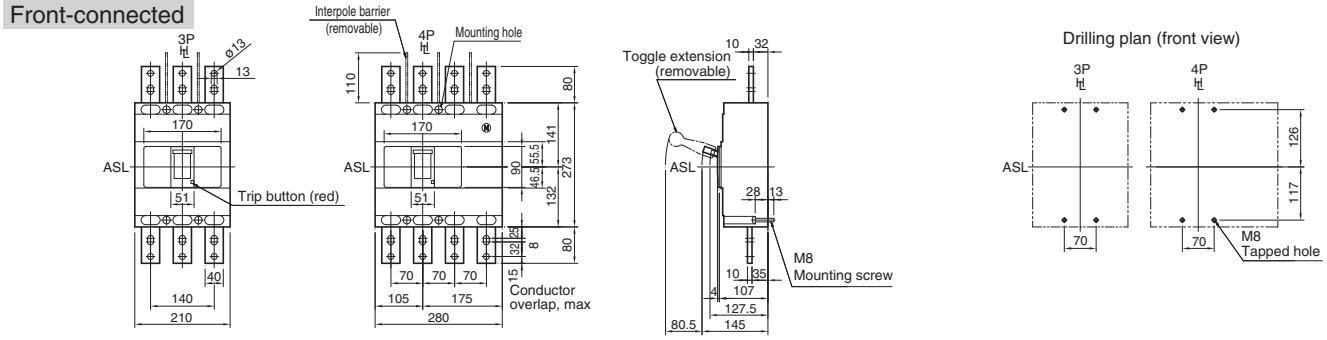

Rear-connected

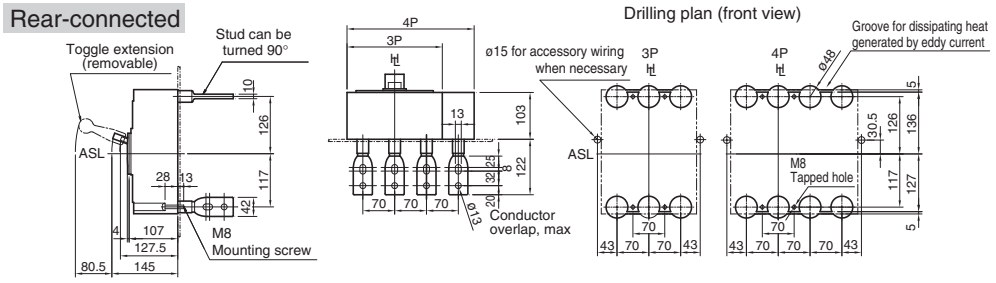

Note: Studs are factory installed in horizontal direction both on the line and load sides.

Panel cutout (front view)

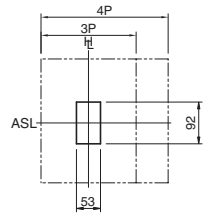

Panel cutout dimensions shown give an allowance of 1.0mm around the handle escutcheon.

Plug-in (Standard)

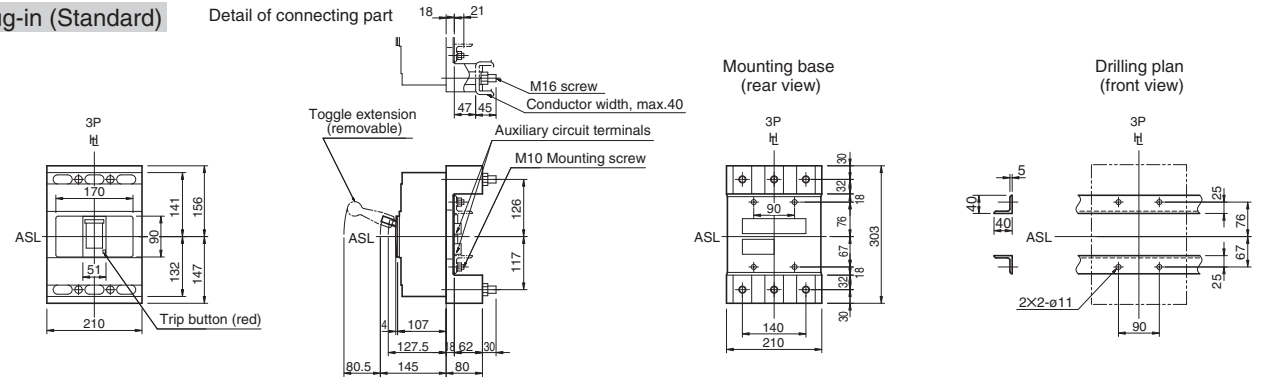

Plug-in (High-performance)

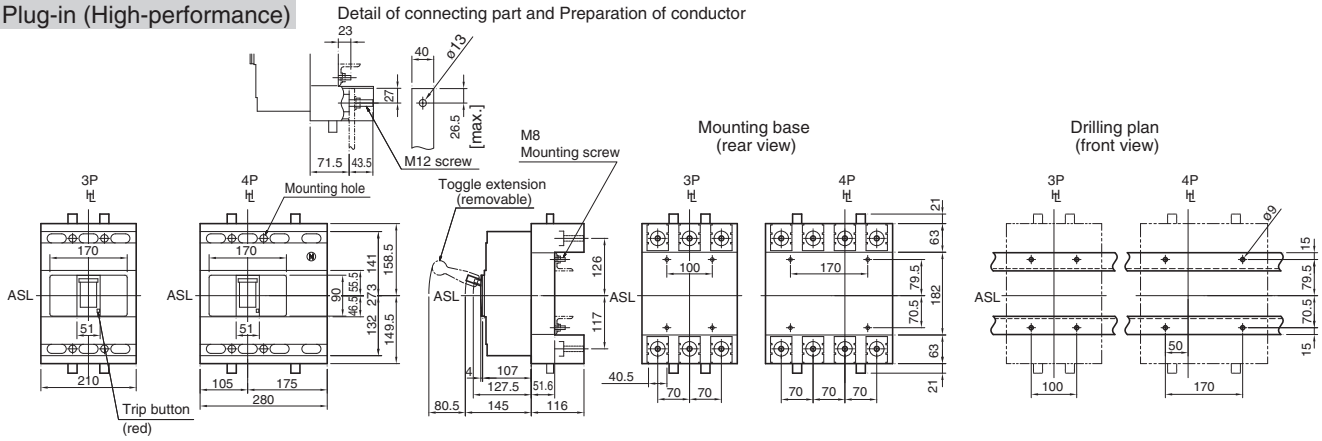

Flush-mounted

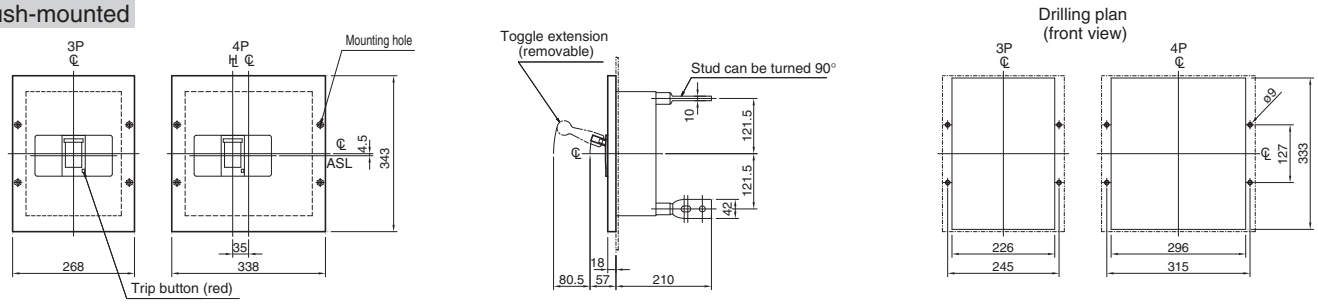

Note: Studs are factory installed in horizontal direction both on the line and load sides.

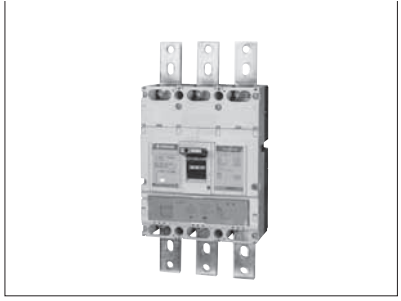

7 Characteristics and Outline Dimensions *TemBreak2*

Molded Case Circuit Breakers (800A Frame)

S800-NE, S800-RE, S800-PE

Ratings and Specifications

Type			S800-NE		S800-RE		S800-PE	
Number of poles			3	4	3	4	3	4
■Ratings								
Rated current, A			(Adjustable)		(Adjustable)		(Adjustable)	
Calibrated at 45°C			350	600	350	600	350	600
			400	700	400	700	400	700
			450	800	450	800	450	800
			500		500		500	
Rated insulation voltage〔U_i〕 V			690		690		690	
Rated impulse withstand voltage〔U_{imp}〕 kV			8		8		8	
■Rated breaking capacity, kA								
NK	AC	690V	20/20		—		—	
I_{cu}/I_{cs}(sym)		450V	50/50		—		—	
		240V	85/85		—		—	
	DC	250V	—		—		—	
IEC60947-2	AC	690V	20/20		25/20		25/20	
I_{cu}/I_{cs}(sym)		500V	30/30		45/34		45/34	
		440V	50/50		65/50		85/50	
		415V	50/50		70/50		100/50	
		380V	50/50		70/50		100/50	
		240V	85/85		100/75		125/125	
	DC	250V	—		—		—	
		125V	—		—		—	
■Rated short time withstand current, kA			10 (0.3sec)		10 (0.3sec)		10 (0.3sec)	
Weight (◉ marked standard type) kg			9.1	12.3	9.1	12.3	9.1	12.3
■Connections and Mountings								
Front-connected (FC)	Terminal screws		—		—		—	
	With extension bars		◉		◉		◉	
Rear-connected (RC)	Bolt studs		—		—		—	
	Flat bar studs		○		○		○	
Plug-in (PM)	For switchboards	Standard (PMC)	○	—	○	—	○	—
		High-performance (PMB)	○		○		○	
	For distribution boards (PMC)		—		—		—	
Flush-mounted (FP)	With flat bar studs		○		○		○	
Draw-out type (DR)			▲		▲		▲	
TemPlug70 (PG)			—		—		—	
TemPlug45B (PG4)			—		—		—	
DIN rail mount			—		—		—	
Clip-in chassis mount			—		—		—	
■Accessories (optional)		Symbol						
Externally mounted	Motor operator	M C	●		●		●	
	External operating handle: Breaker-mounted	H B	●		●		●	
	External operating handle: Door-mounted (variable depth)	H P	●		●		●	
	Toggle extension ⑨	H A	●		●		●	
	Mechanical interlock ⑨ Slide type	M S	●		●		●	
	Toggle holder ⑨	H H	●		●		●	
	Toggle lock ⑨	H L						
	Terminal cover: For front-connected ⑨	C F	●		●		●	
	Terminal cover: For rear-connected and plug-in	C R	●		●		●	
	Interpole barrier ⑨	B A	● ③		● ③		● ③	
	Terminal block for lead ⑨	T F	●		●		●	
	Door flange ⑨	D F	●		●		●	
■Standard specifications								
Overcurrent trip mechanism			Electronic ⑯		Electronic ⑯		Electronic ⑯	
Trip button (color)			Yes (Red)		Yes (Red)		Yes (Red)	
Handle position indication (ON: Red, OFF: Green)			Yes		Yes		Yes	
Suitability for isolation			Yes		Yes		Yes	
CE marking			Yes		Yes		Yes	

Notes:
◉ : Standard. This configuration used unless otherwise specified. ○ : Optional standard. Specify when ordering.
▲ : Semi-standard. ● : "yes" or "available". — : "no" or "not available".
③ : Line side interpole barriers are supplied as standard. (Front connection only)
⑨ : Not applicable to the draw-out type (DR).
⑯ : Optional pretrip alarm or ground fault trip function available on request.

Time/Current characteristic curves

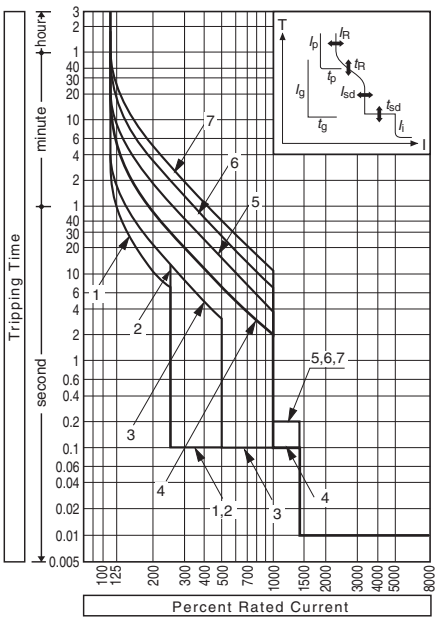

Overcurrent tripping characteristics

Characteristics No.		1	2	3	4	5	6	7
Long time-delay pick-up current (A) : (I_R)		CT rated current : (I_{CT}) = 800A 350, 400, 450, 500, 600, 700, 800						
Long time-delay time settings (s) : (t_R)		11	21	21	5	10	19	29
		at 200%×(I_R)			at 600%×(I_R)			
		Setting tolerance ±20%						
Short time-delay pick-up current (A) : (I_{sd})	(I_R)×	2.5	2.5	5	10	10	10	10
		Setting tolerance ±15%						
Short time-delay time settings (s) : (t_{sd})		0.1	0.1	0.1	0.1	0.2	0.2	0.2
		Total clearing time +50ms, resettable time −20ms						
Instantaneous trip pick-up current (A) : (I_i)		(I_R)×1400% Setting tolerance ±20%		Max: (I_{CT})×1200%				
Option	Preferential trip alarm							
	Pick-up current (A) : (I_p)	(I_R)×80% Setting tolerance ±10%						
	Time-settings (s) : (t_p)	Definite time-delay characteristic, 40sec. Setting tolerance ±10%						
	Ground falut trip							
	Pick-up current (A) : (I_g)	(I_{CT})×20% Setting tolerance ±15%						
	Time-settings (s) : (t_g)	Difinite time-delay characteristic, 0.2sec. Total tripping time +50ms, resettable time −20ms.						
	Neutral protection							
	Pick-up current (A) : (I_N)	(I_R)×100% or 50% selectable ②						
	Time-settings (s) : (t_N)	(t_N)=(t_R) Same as Long time-delay time settings						

Characteristic No.4 will be applied as standard setting unless otherwise specified.
Note:
②. In case of (I_R)<(I_{CT}), the setting tolerance becomes big when (I_N) is set at (I_R)×50%.

Combinations of Internally Mounted Accessories (Optional)

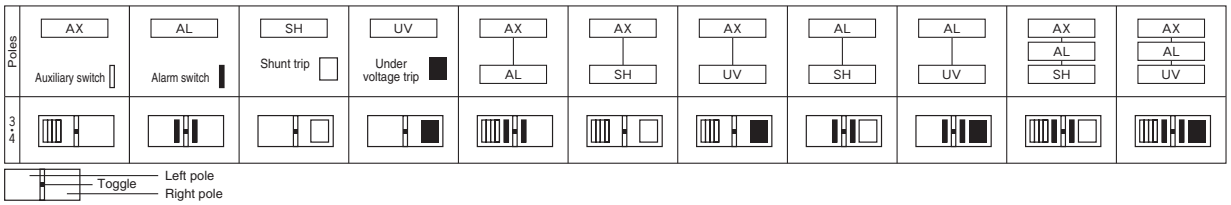

Outline dimensions (mm) — S800-NE, S800-RE, S800-PE

Front-connected

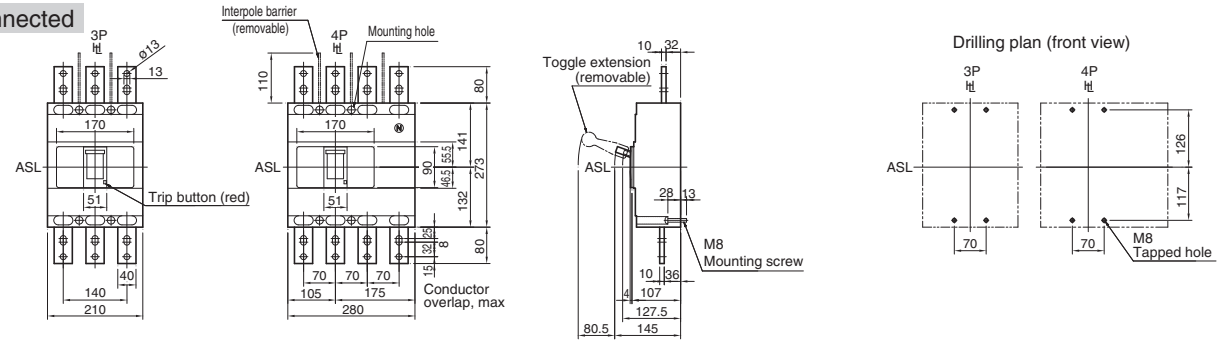

Rear-connected

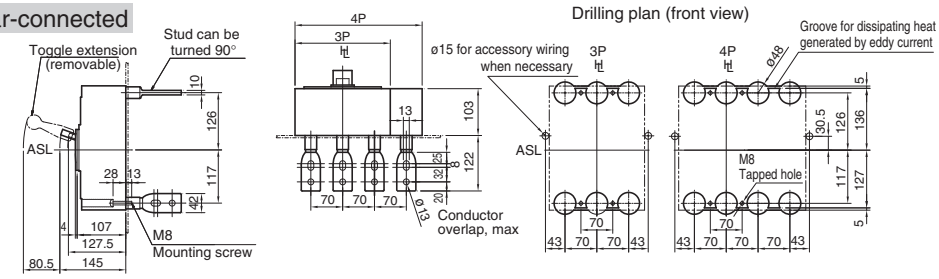

Note: Studs are factory installed in horizontal direction both on the line and load sides.

Panel cutout (front view)

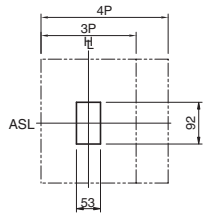

Panel cutout dimensions shown give an allowance of 1.0mm around the handle escutcheon.

Plug-in (Standard)

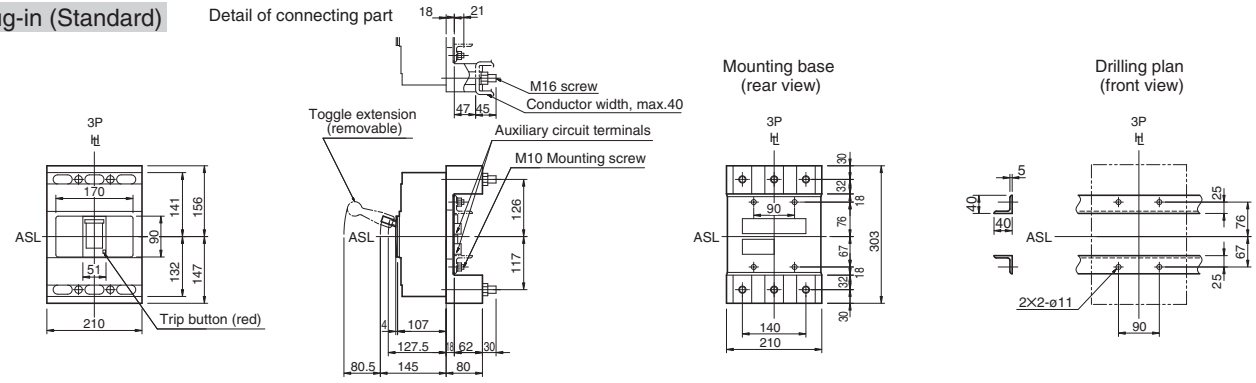

Plug-in (High-performance)

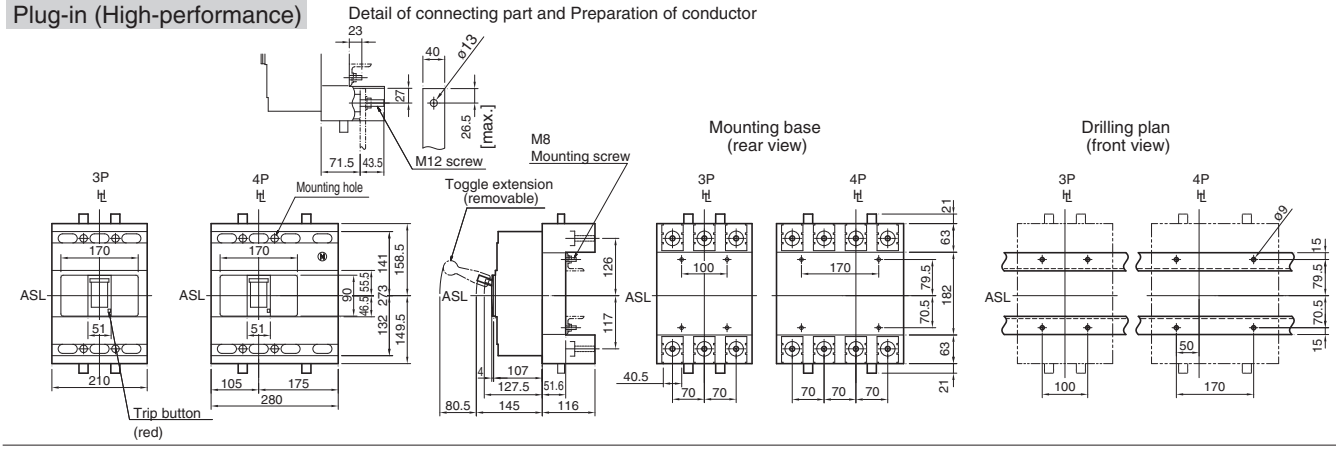

Flush-mounted

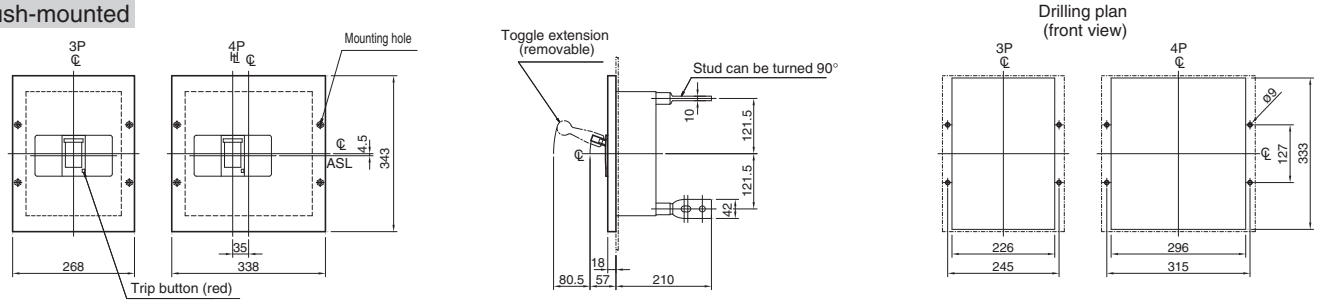

Note: Studs are factory installed in horizontal direction both on the line and load sides.

7 Characteristics and Outline Dimensions *TemBreak2*

Molded Case Circuit Breakers (800A Frame)

H800-NE, L800-NE

Ratings and Specifications

Type			H800-NE		L800-NE	
Number of poles			3	4	3	4
■Ratings						
Rated current, A			(Adjustable)		(Adjustable)	
Calibrated at 45°C			350	600	350	600
			400	700	400	700
			450	800	450	800
			500		500	
Rated insulation voltage〔U_i〕 V			690		690	
Rated impulse withstand voltage〔U_{imp}〕 kV			8		8	
■Rated breaking capacity, kA						
NK	AC	690V	25/20		25/20	
I_{cu}/I_{cs}(sym)		450V	125/94		180/135	
		240V	150/150		200/150	
	DC	250V	—		—	
IEC60947-2	AC	690V	25/20		25/20	
I_{cu}/I_{cs}(sym)		500V	45/34		45/34	
		440V	125/94		180/135	
		415V	125/94		200/150	
		380V	125/94		200/150	
		240V	150/150		200/150	
	DC	250V	—		—	
		125V	—		—	
■Rated short time withstand current, kA			10 (0.3sec)		10 (0.3sec)	
Weight (◉ marked standard type) kg			14.3	20.3	14.3	20.3
■Connections and Mountings						
Front-connected (FC)	Terminal screws		—		—	
	With extension bars		◉		◉	
Rear-connected (RC)	Bolt studs		—		—	
	Flat bar studs		○		○	
Plug-in (PM) For switchboards	Standard (PMC)		○	—	○	—
	High-performance (PMB)		○		○	
For distribution boards (PMC)			—		—	
Flush-mounted (FP) With flat bar studs			○		○	
Draw-out type (DR)			—		—	
TemPlug70 (PG)			—		—	
TemPlug45B (PG4)			—		—	
DIN rail mount			—		—	
Clip-in chassis mount			—		—	
■Accessories (optional)		**Symbol**				
Externally mounted: Motor operator		M C	●		●	
External operating handle	Breaker-mounted	H B	●		●	
	Door-mounted (variable depth)	H P	●		●	
Toggle extension		H A	●		●	
Mechanical interlock⑨ Slide type		M S	●		●	
Toggle holder		H H	●		●	
Toggle lock		H L				
Terminal cover	For front-connected	C F	●		●	
	For rear-connected and plug-in	C R	●		●	
Interpole barrier		B A	● ③		● ③	
Terminal block for lead		T F	●		●	
Door flange		D F	●		●	
■Standard specifications						
Overcurrent trip mechanism			Electronic ⑯		Electronic ⑯	
Trip button (color)			Yes (Red)		Yes (Red)	
Handle position indication (ON: Red, OFF: Green)			Yes		Yes	
Suitability for isolation			Yes		Yes	
CE marking			Yes		Yes	

Notes:
◉ : Standard. This configuration used unless otherwise specified. ○ : Optional standard. Specify when ordering.
▲ : Semi-standard. ● : "yes" or "available". — : "no" or "not available". ③ : Line side interpole barriers are supplied as standard. (Front connection only) ⑨ : The mechanical interlock is not applicable to the draw-out type (DR).
⑯ : Optional pretrip alarm or ground fault trip function available on request.

Time/Current characteristic curves

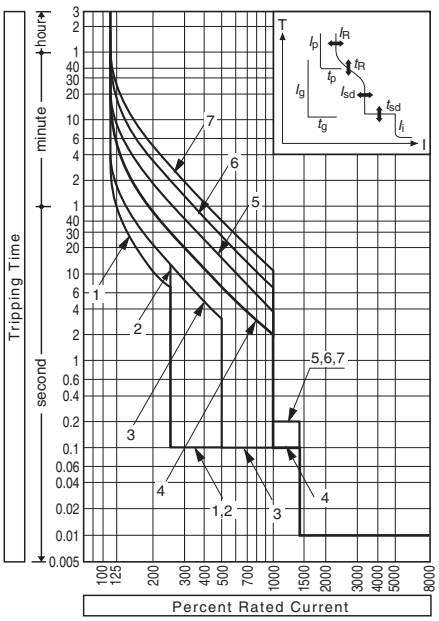

Overcurrent tripping characteristics

Characteristics No.		1	2	3	4	5	6	7
Long time-delay pick-up current (A) : (I_R)		CT rated current : (I_{CT}) = 800A 350, 400, 450, 500, 600, 700, 800						
Long time-delay time settings (s) : (t_R)		11	21	21	5	10	19	29
		at 200%×(I_R)			at 600%×(I_R)			
		Setting tolerance ±20%						
Short time-delay pick-up current (A) : (I_{sd})	(I_R)×	2.5	2.5	5	10	10	10	10
		Setting tolerance ±15%						
Short time-delay time settings (s) : (t_{sd})		0.1	0.1	0.1	0.1	0.2	0.2	0.2
		Total clearing time +50ms, resettable time −20ms						
Instantaneous trip pick-up current (A) : (I_i)		(I_R)×1400% Setting tolerance ±20%		Max: (I_{CT})×1200%				
Option: Preferential trip alarm	Pick-up current (A) : (I_p)	(I_R)×80% Setting tolerance ±10%						
	Time-settings (s) : (t_p)	Definite time-delay characteristic, 40sec. Setting tolerance ±10%						
Ground falut trip	Pick-up current (A) : (I_g)	(I_{CT})×20% Setting tolerance ±15%						
	Time-settings (s) : (t_g)	Difinite time-delay characteristic, 0.2sec. Total tripping time +50ms, resettable time −20ms.						
Neutral protection	Pick-up current (A) : (I_N)	(I_R)×100% or 50% selectable ②						
	Time-settings (s) : (t_N)	(t_N)=(t_R) Same as Long time-delay time settings						

Characteristic No.4 will be applied as standard setting unless otherwise specified.
Note:
②. In case of (I_R)<(I_{CT}), the setting tolerance becomes big when (I_N) is set at (I_R)×50%.

Combinations of Internally Mounted Accessories (Optional)

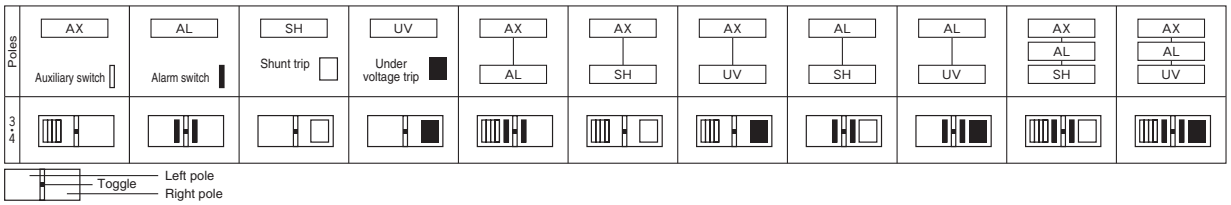

Outline dimensions (mm) — H800-NE, L800-NE

Front-connected

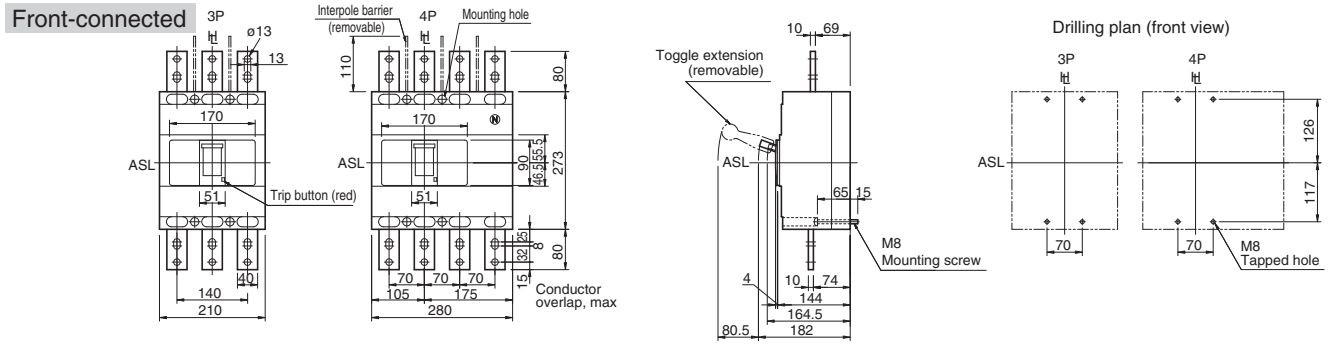

Rear-connected

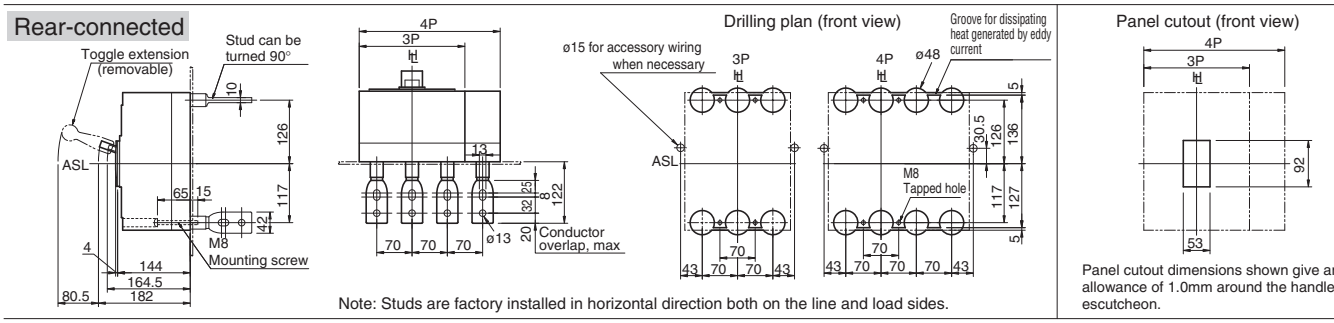

Note: Studs are factory installed in horizontal direction both on the line and load sides.

Panel cutout dimensions shown give an allowance of 1.0mm around the handle escutcheon.

Plug-in (Standard)

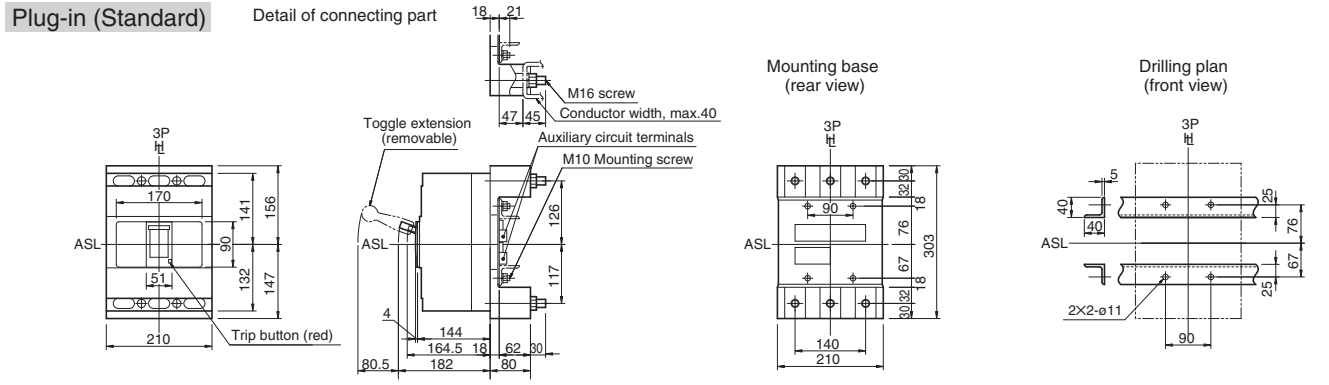

Plug-in (High-performance)

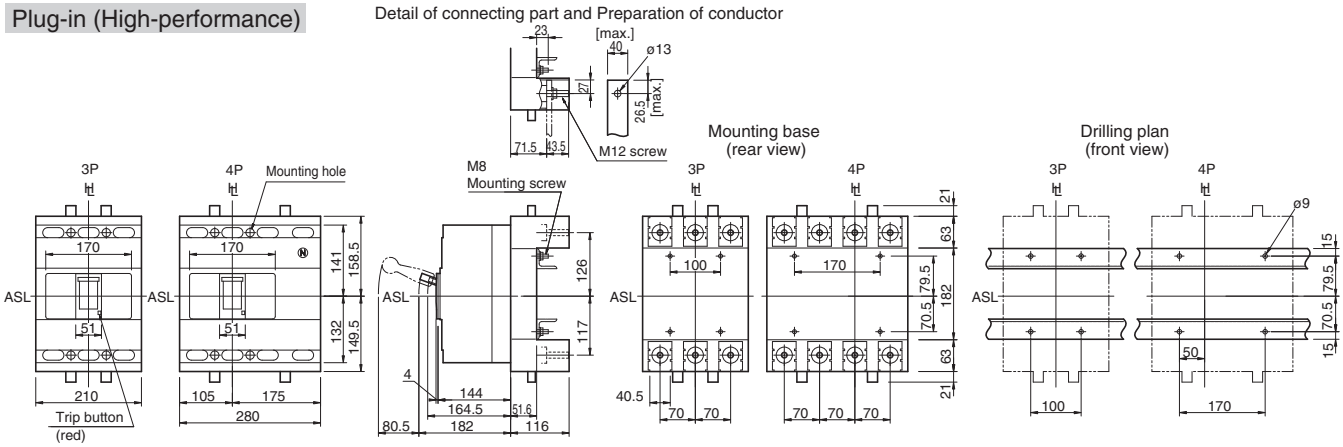

Flush-mounted

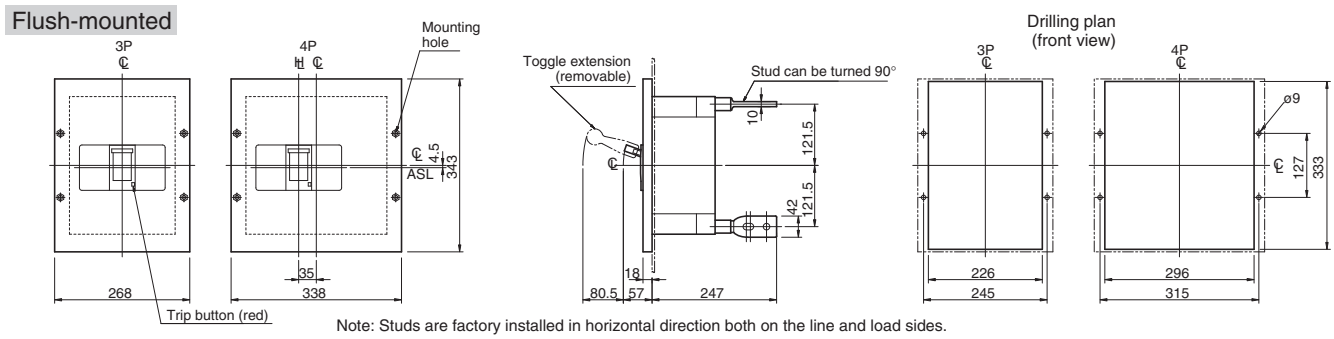

Note: Studs are factory installed in horizontal direction both on the line and load sides.

7 Characteristics and Outline Dimensions *TemBreak2*

Molded Case Circuit Breakers (1250A Frame)

S1250-NE, S1250-GE

Ratings and Specifications

Type			S1250-NE		S1250-GE	
Number of poles			3	4	3	4
■Ratings						
Rated current, A			(Adjustable)		(Adjustable)	
Calibrated at 45°C			500	1000	500	1000
			600	1200	600	1200
			700	1250	700	1250
			800		800	
Rated insulation voltage〔U_i〕 V			690		690	
Rated impulse withstand voltage〔U_{imp}〕 kV			8		8	
■Rated breaking capacity, kA						
NK	AC	690V	25/20		45/34	
I_{cu}/I_{cs}(sym)		450V	65/50		85/65	
		240V	100/75		125/94	
	DC	250V	—		—	
IEC60947-2	AC	690V	25/20		45/34	
I_{cu}/I_{cs}(sym)		500V	45/34		65/50	
		440V	65/50		85/65	
		415V	70/50		85/65	
		380V	85/65		100/75	
		240V	100/75		125/94	
	DC	250V	—		—	
		125V	—		—	
■Rated short time withstand current, kA			15 (0.3sec)		15 (0.3sec)	
Weight (◉ marked standard type) kg			19.8	25.0	19.8	25.0
■Connections and Mountings						
Front-connected (FC)	Terminal screws		—		—	
	With extension bars		◉		◉	
Rear-connected (RC)	Bolt studs		—		—	
	Flat bar studs		○		○	
Plug-in (PM) For switchboards	Standard (PMC)		○		○	
	High-performance (PMB)		—		—	
For distribution boards (PMC)			—		—	
Flush-mounted (FP) With flat bar studs			○		○	
Draw-out type (DR)			▲		▲	
TemPlug70 (PG)			—		—	
TemPlug45B (PG4)			—		—	
DIN rail mount			—		—	
Clip-in chassis mount			—		—	
■Accessories (optional)		**Symbol**				
Externally mounted: Motor operator		M C	●		●	
External operating handle	Breaker-mounted	H B	●		●	
	Door-mounted (variable depth)	H P	●		●	
Toggle extension		H A	● ㉔		● ㉔	
Mechanical interlock⑨ Slide type		M S	●		●	
Toggle holder		H H	●		●	
Toggle lock		H L				
Terminal cover	For front-connected	C F	●		●	
	For rear-connected and plug-in	C R	—		—	
Interpole barrier		B A	● ③		● ③	
Terminal block for lead		T F	●		●	
Door flange		D F	●		●	
■Standard specifications						
Overcurrent trip mechanism			Electronic ⑯		Electronic ⑯	
Trip button (color)			Yes (Red)		Yes (Red)	
Handle position indication (ON: Red, OFF: Green)			Yes		Yes	
Suitability for isolation			Yes		Yes	
CE marking			Yes		Yes	

Notes:
◉ : Standard. This configuration used unless otherwise specified. ○ : Optional standard. Specify when ordering.
▲ : Semi-standard. ● : "yes" or "available". — : "no" or "not available". ③ : Line side interpole barriers are supplied as standard. (Front connection only) ⑨ : The mechanical interlock is not applicable to the draw-out type (DR).
⑯ : Optional pretrip alarm or ground fault trip function available on request.
㉔ : One is supplied with every five breakers. Please specify if more are required.

Time/Current characteristic curves

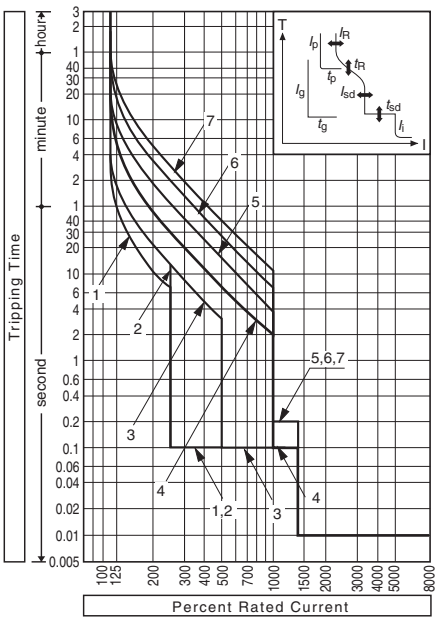

Overcurrent tripping characteristics

Characteristics No.		1	2	3	4	5	6	7
Long time-delay pick-up current (A) : (I_R)		CT rated current : (I_{CT}) = 1250A 500, 600, 700, 800, 1000, 1200, 1250						
Long time-delay time settings (s) : (t_R)		11	21	21	5	10	19	29
		at 200%×(I_R)			at 600%×(I_R)			
		Setting tolerance ±20%						
Short time-delay pick-up current (A) : (I_{sd})	(I_R)×	2.5	2.5	5	10	10	10	10
		Setting tolerance ±15%						
Short time-delay time settings (s) : (t_{sd})		0.1	0.1	0.1	0.1	0.2	0.2	0.2
		Total clearing time +50ms, resettable time −20ms						
Instantaneous trip pick-up current (A) : (I_i)		(I_R)×1400% Setting tolerance ±20%			Max: (I_{CT})×1200%			
Option: Preferential trip alarm	Pick-up current (A) : (I_p)	(I_R)×80% Setting tolerance ±10%						
	Time-settings (s) : (t_p)	Definite time-delay characteristic, 40sec. Setting tolerance ±10%						
Ground falut trip	Pick-up current (A) : (I_g)	(I_{CT})×20% Setting tolerance ±15%						
	Time-settings (s) : (t_g)	Difinite time-delay characteristic, 0.2sec. Total tripping time +50ms, resettable time −20ms.						
Neutral protection	Pick-up current (A) : (I_N)	(I_R)×100% or 50% selectable ②						
	Time-settings (s) : (t_N)	(t_N)=(t_R) Same as Long time-delay time settings						

Characteristic No.4 will be applied as standard setting unless otherwise specified.
Note:
②. In case of (I_R)<(I_{CT}), the setting tolerance becomes big when (I_N) is set at (I_R)×50%.

Combinations of Internally Mounted Accessories (Optional)

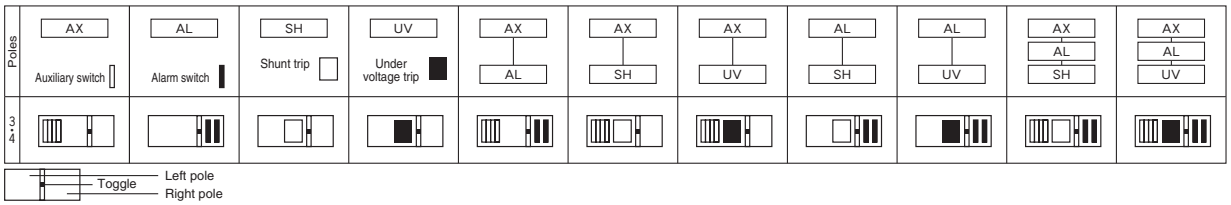

Outline dimensions (mm) — S1250-NE, S1250-GE

Front-connected

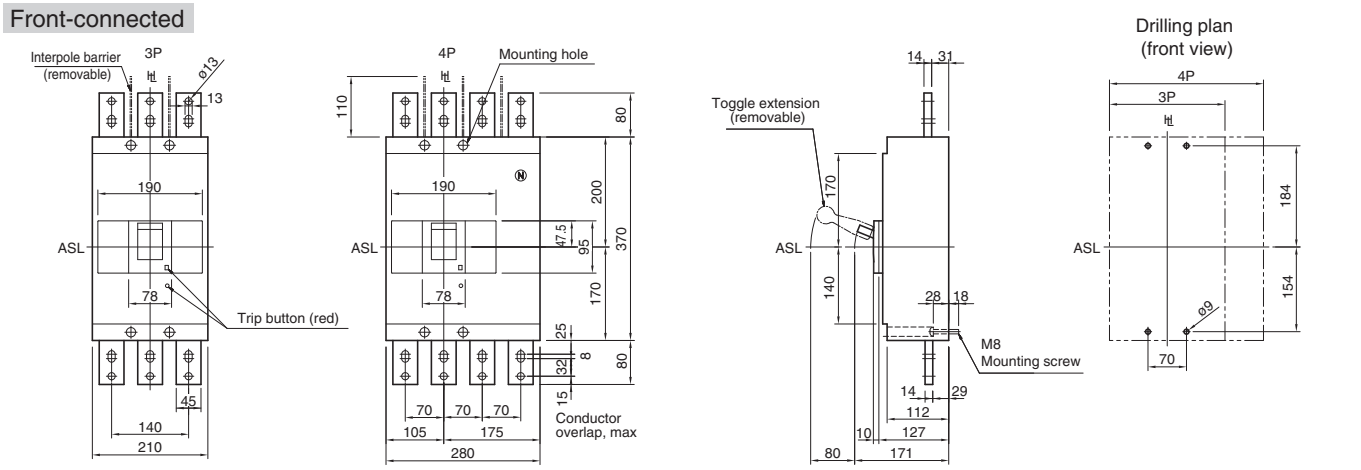

Rear-connected

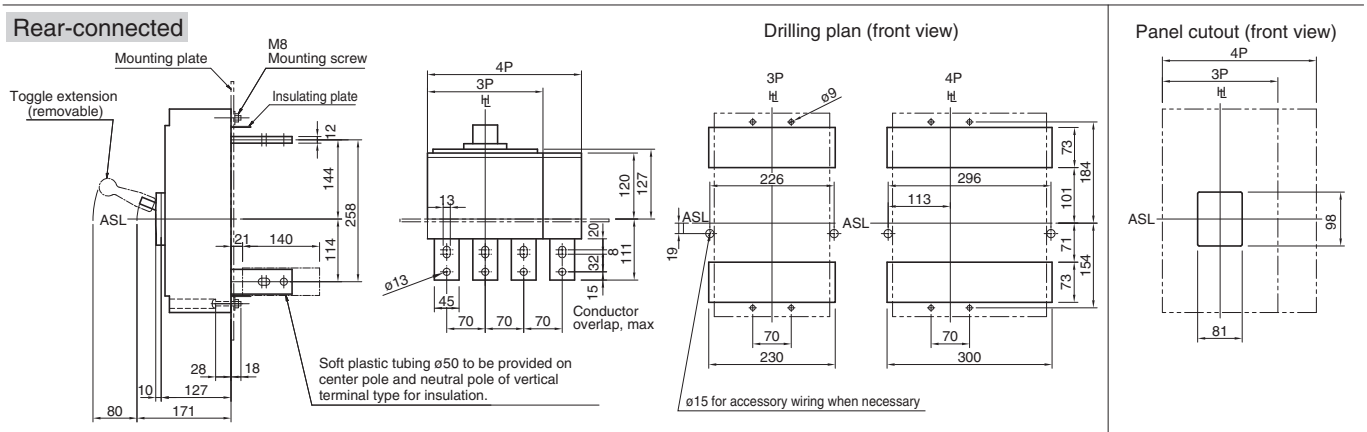

Note: Studs are factory installed in horizontal direction both on the line and load sides.

Panel cutout dimensions shown give an allowance of 1.5mm around the handle escutcheon.

Plug-in (Standard)

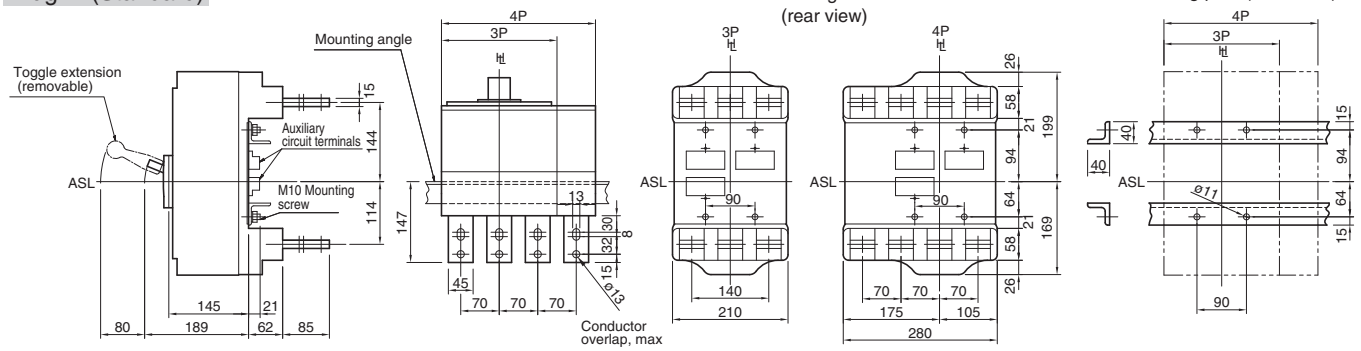

Flush-mounted

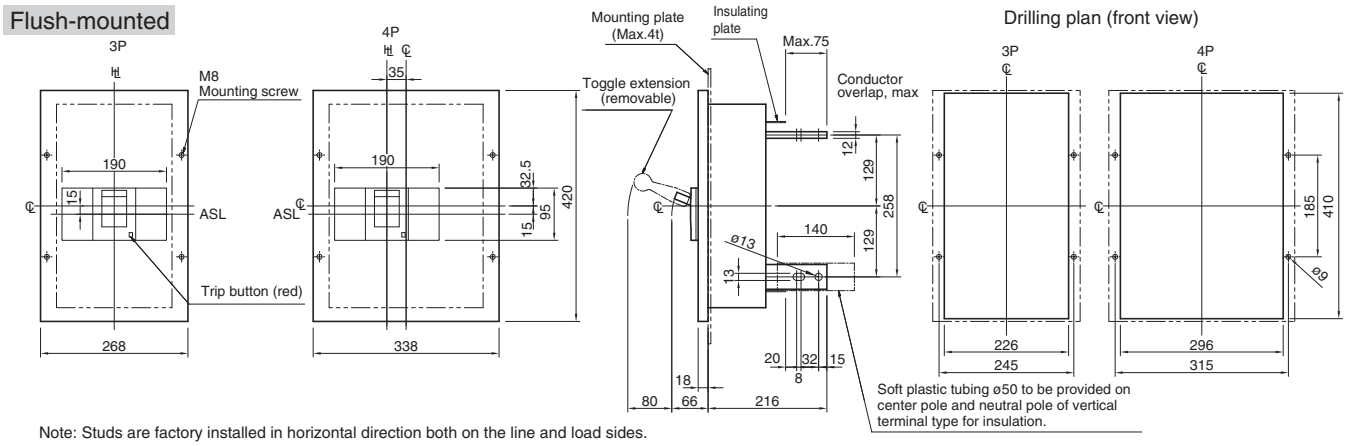

Note: Studs are factory installed in horizontal direction both on the line and load sides.

7 Characteristics and Outline Dimensions *TemBreak2*

Molded Case Circuit Breakers (1600A Frame)

S1600-NE

Ratings and Specifications

Type			S1600-NE	
Number of poles			3	4
■Ratings				
Rated current, A			(Adjustable)	
Calibrated at 45°C			700	1200
			800	1400
			900	1500
			1000	1600
Rated insulation voltage〔U_i〕 V			690	
Rated impulse withstand voltage〔U_{imp}〕 kV			8	
■Rated breaking capacity, kA				
NK	AC	690V	—	
I_{cu}/I_{cs}(sym)		450V	—	
		240V	—	
	DC	250V	—	
IEC60947-2	AC	690V	45/34	
I_{cu}/I_{cs}(sym)		500V	65/50	
		440V	85/65	
		415V	85/65	
		380V	100/75	
		240V	125/94	
	DC	250V	—	
		125V	—	
■Rated short time withstand current, kA			20 (0.3sec)	
Weight (◉ marked standard type) kg			27.0	35.0
■Connections and Mountings				
Front-connected (FC)	Terminal screws		—	
	With extension bars		○	
Rear-connected (RC)	Bolt studs		—	
	Flat bar studs		◉	
Plug-in (PM) For switchboards	Standard (PMC)		—	
	High-performance (PMB)		—	
For distribution boards (PMC)			—	
Flush-mounted (FP) With flat bar studs			○	
Draw-out type (DR)			○	
TemPlug70 (PG)			—	
TemPlug45B (PG4)			—	
DIN rail mount			—	
Clip-in chassis mount			—	
■Accessories (optional)		**Symbol**		
Externally mounted: Motor operator		M C	●	
External operating handle: Breaker-mounted		H B	●	
External operating handle: Door-mounted (variable depth)		H P	●	
Toggle extension		H A	● ㉔	
Mechanical interlock⑨ Slide type		M S	●	
Toggle holder		H H	●	
Toggle lock		H L		
Terminal cover	For front-connected	C F	—	
	For rear-connected and plug-in	C R	—	
Interpole barrier		B A	● ③	
Terminal block for lead		T F	●	
Door flange		D F	●	
■Standard specifications				
Overcurrent trip mechanism			Electronic ⑯	
Trip button (color)			Yes (Red)	
Handle position indication (ON: Red, OFF: Green)			Yes	
Suitability for isolation			Yes	
CE marking			Yes	

Notes:
◉ : Standard. This configuration used unless otherwise specified. ○ : Optional standard. Specify when ordering.
● : "yes" or "available". — : "no" or "not available". ③ : Line side interpole barriers are supplied as standard. (Front connection only) ⑨ : The mechanical interlock is not applicable to the draw-out type (DR).
⑯ : Optional pretrip alarm or ground fault trip function available on request.
㉔ : One is supplied with every five breakers. Please specify if more are required.

Time/Current characteristic curves

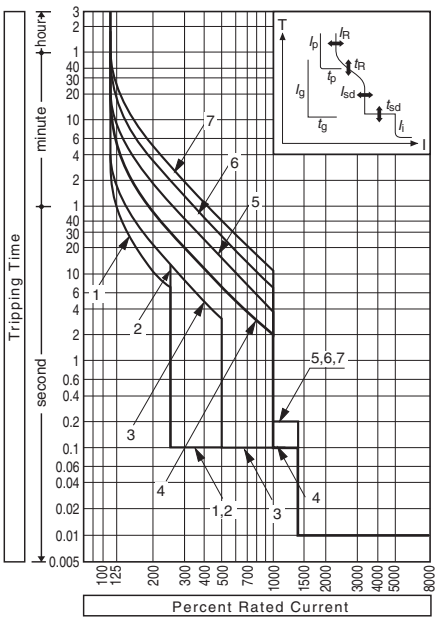

Overcurrent tripping characteristics

Characteristics No.		1	2	3	4	5	6	7
Long time-delay pick-up current (A) : (I_R)		CT rated current : (I_{CT}) = 1600A 700, 800, 900, 1000, 1200, 1400, 1500, 1600						
Long time-delay time settings (s) : (t_R)		11	21	21	5	10	19	29
		at 200%×(I_R)			at 600%×(I_R)			
		Setting tolerance ±20%						
Short time-delay pick-up current (A) : (I_{sd})	(I_R)×	2.5	2.5	5	10	10	10	10
		Setting tolerance ±15%						
Short time-delay time settings (s) : (t_{sd})		0.1	0.1	0.1	0.1	0.2	0.2	0.2
		Total clearing time +50ms, resettable time −20ms						
Instantaneous trip pick-up current (A) : (I_i)		(I_R)×1400% Setting tolerance ±20%			Max: (I_{CT})×1200%			
Option: Preferential trip alarm	Pick-up current (A) : (I_p)	(I_R)×80% Setting tolerance ±10%						
	Time-settings (s) : (t_p)	Definite time-delay characteristic, 40sec. Setting tolerance ±10%						
Option: Ground falut trip	Pick-up current (A) : (I_g)	(I_{CT})×20% Setting tolerance ±15%						
	Time-settings (s) : (t_g)	Difinite time-delay characteristic, 0.2sec. Total tripping time +50ms, resettable time −20ms.						
Option: Neutral protection	Pick-up current (A) : (I_N)	(I_R)×100% or 50% selectable ②						
	Time-settings (s) : (t_N)	(t_N)=(t_R) Same as Long time-delay time settings						

Characteristic No.4 will be applied as standard setting unless otherwise specified.
Note:
②. In case of (I_R)<(I_{CT}), the setting tolerance becomes big when (I_N) is set at (I_R)×50%.

Combinations of Internally Mounted Accessories (Optional)

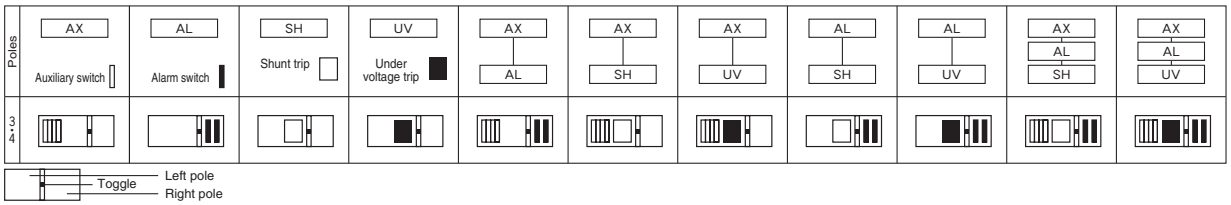

Outline dimensions (mm) S1600-NE

Front-connected

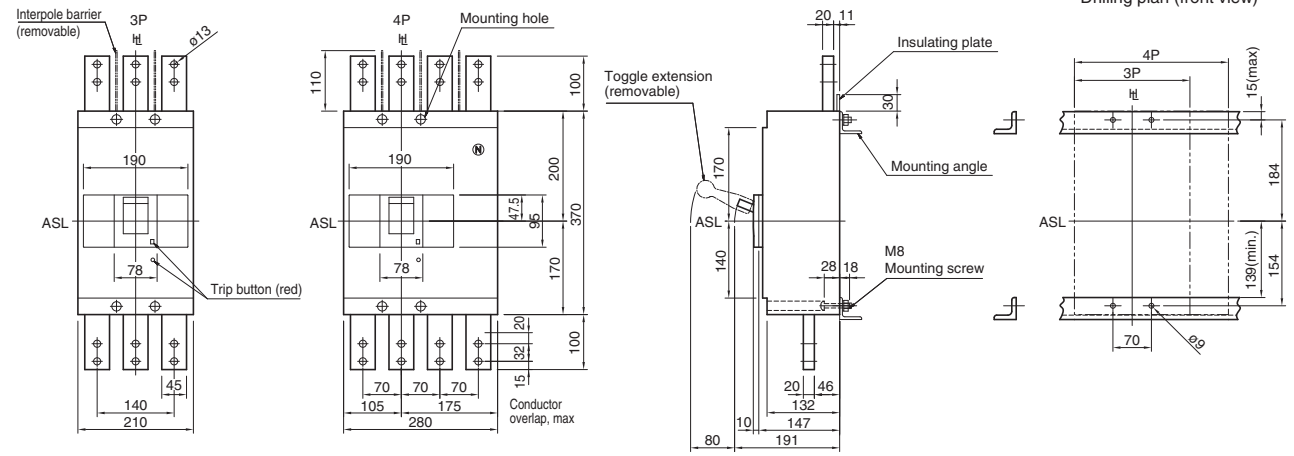

Rear-connected

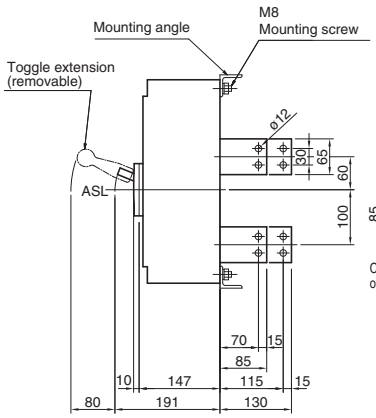

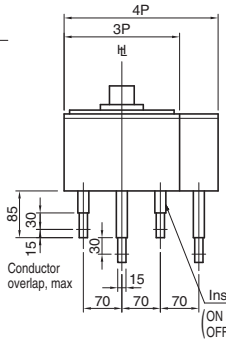

Drilling plan (front view)

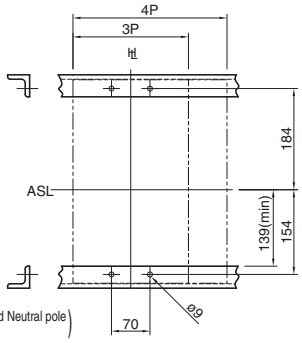

Panel cutout (front view)

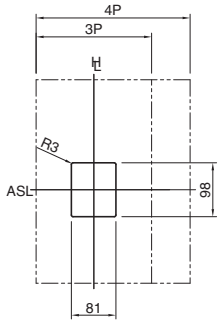

Panel cutout dimensions shown give an allowance of 1.5mm around the handle escutcheon.

Draw-out

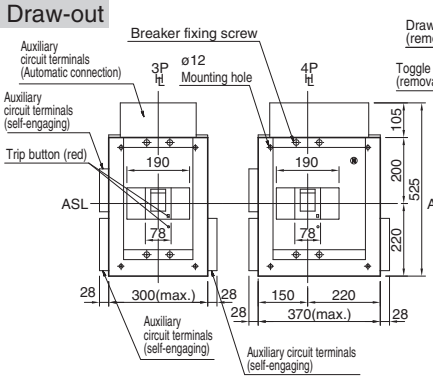

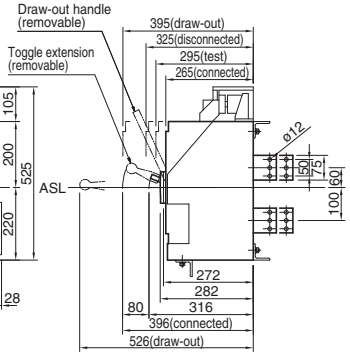

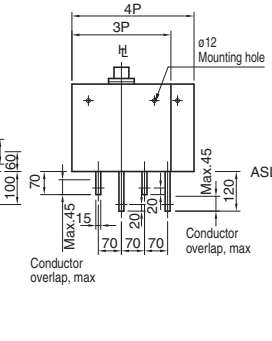

Drilling plan (front view)

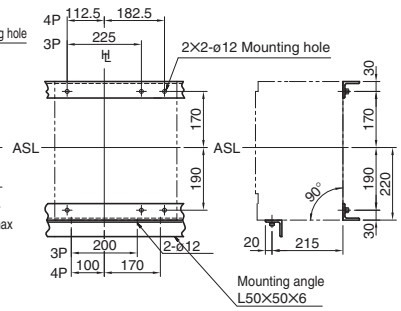

Flush-mounted

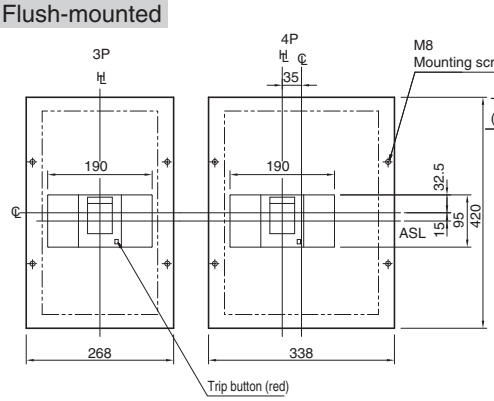

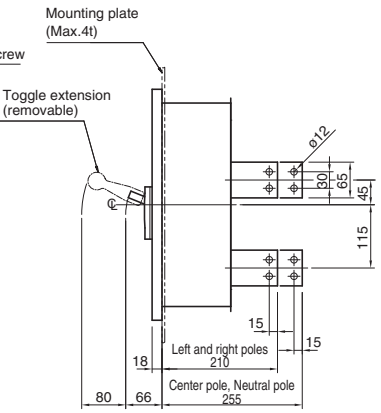

Drilling plan (front view)

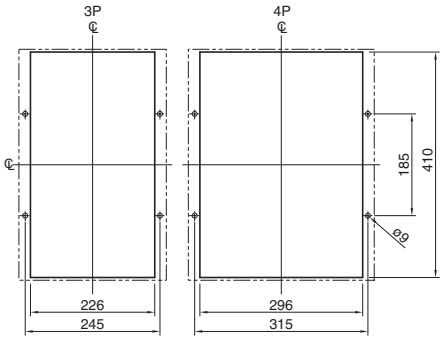

Molded Case Circuit Breakers (50A Frame)

E50-CM

Ratings and Specifications

Type			E50-CM
Number of poles			3
■Ratings			
Motor rated capacity (kW) and breaker rated current (A) Calibrated at 45℃			(A) / (kW) 200/220V / 400/440V: 0.7 — 0.2; 1.4 0.2 0.4; 2 — 0.75; 2.6 0.4 —; 4 0.75 1.5; 5 — 2.2; 8 1.5 3.7; 10 2.2 —; 12 — 5.5; 16 3.7 7.5; 25 5.5 11; 32 7.5 15; 40 — 18.5; 45 11 22
Note: Select an appropriate one depending on the total load current of the motor operator.			
Rated insulation voltage〔U_i〕 V			690
Rated impulse withstand voltage〔U_{imp}〕 kV			6
■Rated breaking capacity, kA			
NK	AC	690V	—
I_{cu}/I_{cs}(sym)		450V	2.5/— ⑬
		240V	5/— ⑭
	DC	250V	—
IEC 60947-2	AC	440V	2.5/1.3
I_{cu}/I_{cs}(sym)		415V	2.5/1.3
		380V	2.5/1.3
		240V	5/2.5
	DC	250V	—
Weight (◉ marked standard type) kg			0.74
■Connections and Mountings			
Front-connected (FC)	Terminal screws		◉
	With extension bars		—
Rear-connected (RC)	Bolt studs		○
	Flat bar studs		—
Plug-in (PM)	For switchboards	Standard (PMC)	○
		High-performance (PMB)	—
	For distribution boards (PMC)		○
Flush-mounted (FP)	With flat bar studs		○ Bolt studs
Draw-out type (DR)			—
TemPlug70 (PG)			—
TemPlug45B (PG4)			—
DIN rail mount			—
Clip-in chassis mount			—
■Accessories (optional)		**Symbol**	
Externally mounted: Motor operator		M C	—
External operating handle	Breaker-mounted	H B	●
	Door-mounted (variable depth)	H P	●
Toggle extension		H A	—
Mechanical interlock Slide type		M S	●
Toggle holder		H H	●
Toggle lock		H L	●
Terminal cover	For front-connected	C F	●
	For rear-connected and plug-in	C R	●
Interpole barrier		B A	●
Terminal block for lead		T F	●
Door flange		D F	●
■Standard specifications			
Overcurrent trip mechanism			Thermal-magnetic㉘
Trip button (color)			Yes (Red)
Handle position indication (ON: Red, OFF: Green)			Yes
Suitability for isolation			Non
CE marking			Non

Notes:
◉ : Standard. This configuration used unless otherwise specified. ○ : Optional standard. Specify when ordering.
● : "yes" or "available". — : "no" or "not available". ⑬ : at 500V AC. ⑭ : at 250V AC. ㉘ : Hydraulic-magnetic type for below 25A rating.

Time/Current characteristic curves

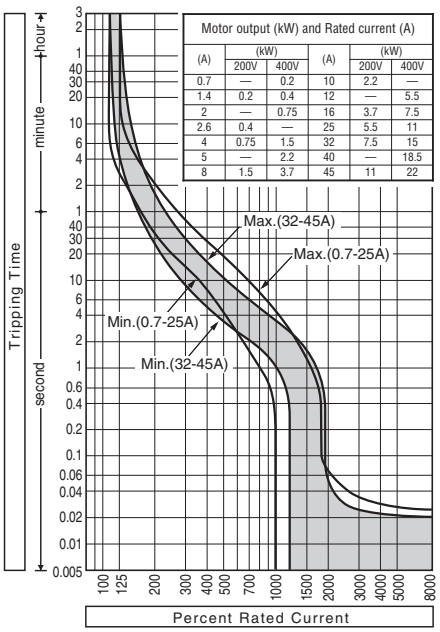

Motor output (kW) and Rated current (A)

(A)	(kW) 200V	(kW) 400V	(A)	(kW) 200V	(kW) 400V
0.7	—	0.2	10	2.2	—
1.4	0.2	0.4	12	—	5.5
2	—	0.75	16	3.7	7.5
2.6	0.4	—	25	5.5	11
4	0.75	1.5	32	7.5	15
5	—	2.2	40	—	18.5
8	1.5	3.7	45	11	22

Ambient Compensating Curves

(0.7-25A)

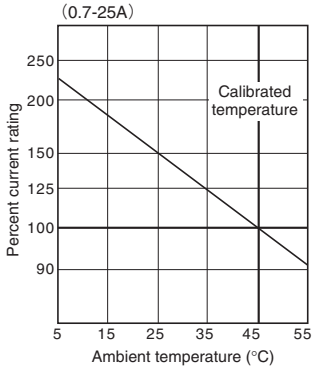

(32-45A)

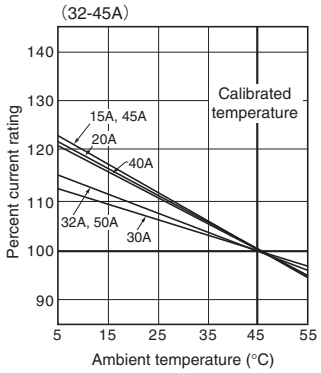

Combinations of Internally Mounted Accessories (Optional)

Poles	AX Auxiliary switch	AL Alarm switch	SH Shunt trip ✻1	UV Under voltage trip	AX–AL	AX–SH	AX–UV	AL–SH	AL–UV	AX–AL–SH	AX–AL–UV
3				—			—		—		—

Toggle — Left pole / Right pole

NOTE: ✻1 Shunt trip is provided with anti-burnout switch.

Outline dimensions (mm) E50-CM

Front-connected

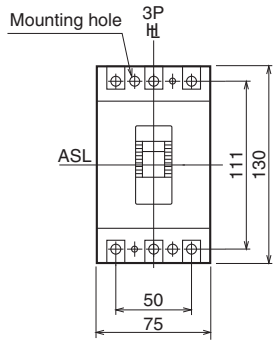

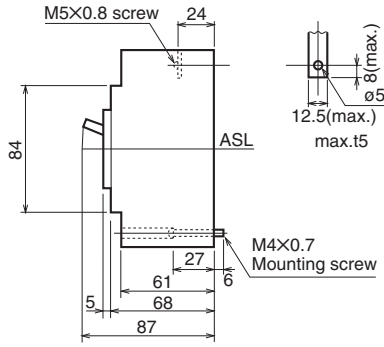

Preparation of conductor

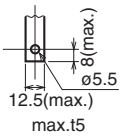

Drilling plan (front view)

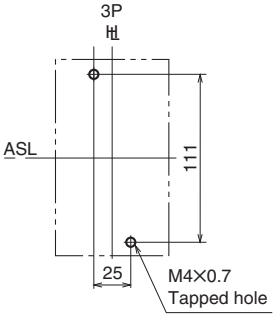

Rear-connected

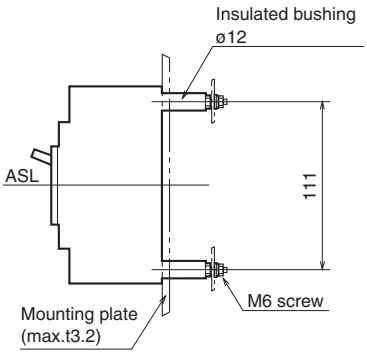

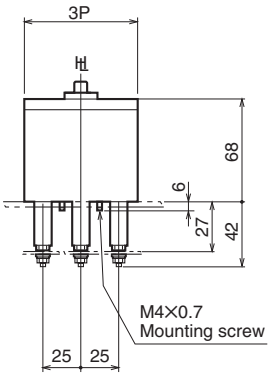

Drilling plan (front view)

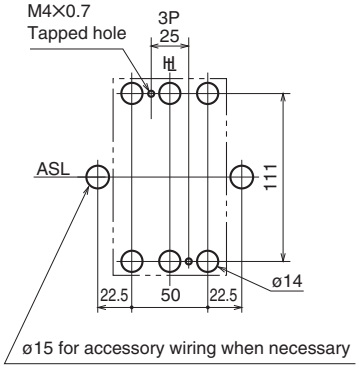

Panel cutout (front view)

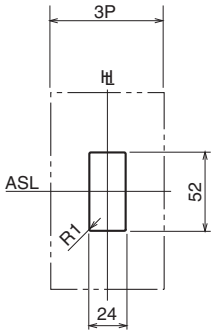

Panel cutout dimensions shown give an allowance of 1.0mm around the handle escutcheon.

Plug-in (Standard)

Detail of connecting part

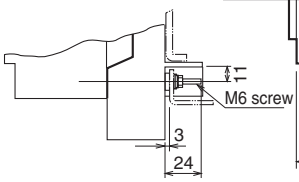

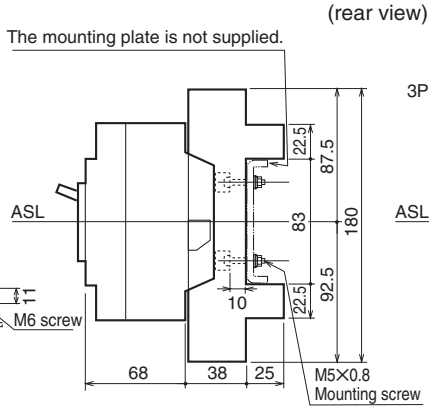

Mounting base (rear view)

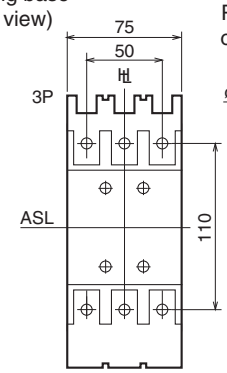

Preparation of conductor

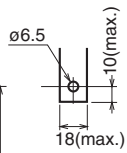

Drilling plan (front view)

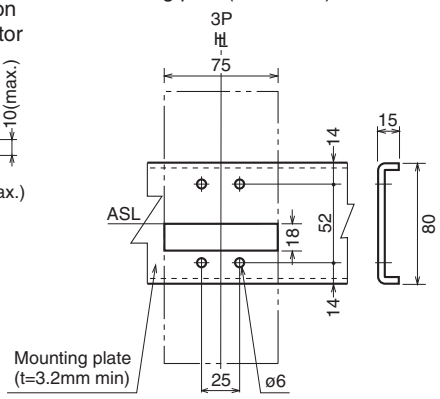

• Allow a space of 5mm from adjacent breaker when the breaker is fitted with internal accessories.

Flush-mounted

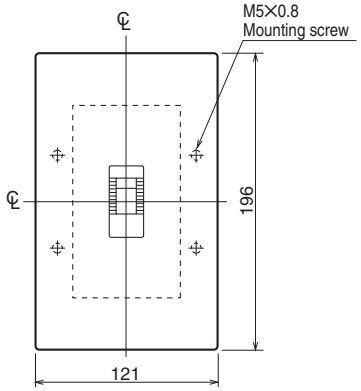

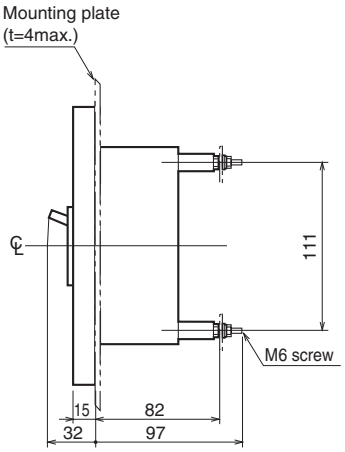

Drilling plan (front view)

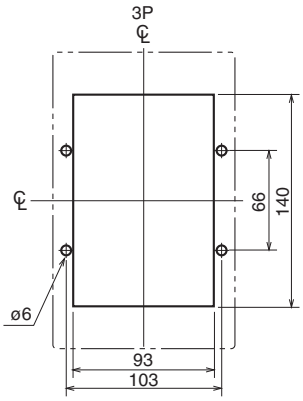

7 Characteristics and Outline Dimensions *TemBreak2*

Molded Case Circuit Breakers (100A Frame)

S100-NM

Ratings and Specifications

Type			S100-NM			
Number of poles			3			
■Ratings						
Motor rated capacity (kW) and breaker rated current (A) Calibrated at 40℃			(A) / (kW) 200/220V / 400/440V			
			16 / 3.7 / 7.5			
			24 / 5.5 / 11			
			32 / 7.5 / 15			
			40 / — / 18.5			
			45 / 11 / 22			
			60 / 15 / 30			
			75 / 18.5 / 37			
			90 / 22 / 45			
			100 / — / 55			
Note: Select an appropriate one depending on the total load current of the motor operator.						
Rated insulation voltage 〔U_i〕 V			690			
Rated impulse withstand voltage 〔U_{imp}〕 kV			8			
■Rated breaking capacity, kA						
NK	AC	690V	—			
I_{cu}/I_{cs}(sym)		450V	25/25			
		240V	50/50			
	DC	250V	—			
IEC 60947-2	AC	440V	25/25			
I_{cu}/I_{cs}(sym)		415V	30/30			
		380V	30/30			
		240V	50/50			
	DC	250V	—			
Weight (◉ marked standard type) kg			1.1			
■Connections and Mountings						
Front-connected (FC)	Terminal screws		◉			
	With extension bars		○ ㊸			
Rear-connected (RC)	Bolt studs		—			
	Flat bar studs		○			
Plug-in (PM) For switchboards	Standard (PMC)		—			
	High-performance (PMB)		—			
For distribution boards (PMC)			—			
Flush-mounted (FP) With flat bar studs			○			
Draw-out type (DR)			—			
TemPlug70 (PG)			○			
TemPlug45B (PG4)			—			
DIN rail mount			○			
Clip-in chassis mount			—			
■Accessories (optional)		**Symbol**				
Externally mounted: Motor operator		M C	●			
External operating handle	Breaker-mounted	H B	●			
	Door-mounted (variable depth)	H P	●			
Toggle extension		H A	—			
Mechanical interlock Slide type		M S	●			
Toggle holder		H H	●			
Toggle lock		H L	●			
Terminal cover	For front-connected	C F	●			
	For rear-connected and plug-in	C R	●			
Interpole barrier		B A	● ③			
Terminal block for lead		T F	●			
Door flange		D F	●			
■Standard specifications						
Overcurrent trip mechanism			Thermal-magnetic			
Trip button (color)			Yes (Red)			
Handle position indication (ON: Red, OFF: Green)			Yes			
Suitability for isolation			Yes			
CE marking			Yes			

Notes:

◉ : Standard. This configuration used unless otherwise specified. ○ : Optional standard. Specify when ordering.

● : "yes" or "available". — : "no" or "not available".

③ : Line side interpole barriers are supplied as standard. (Front connection only)

㊸ : For the extension bars, please palce the order separately in parts.

Time/Current characteristic curves

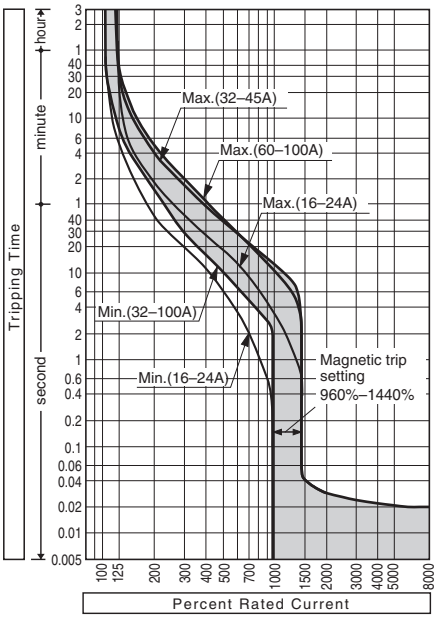

Ambient Compensating Curves

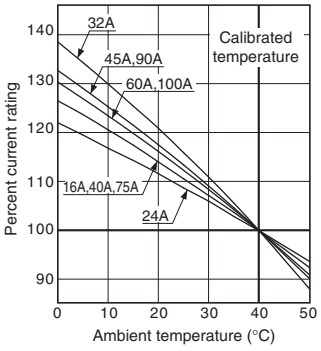

Combinations of Internally Mounted Accessories (Optional)

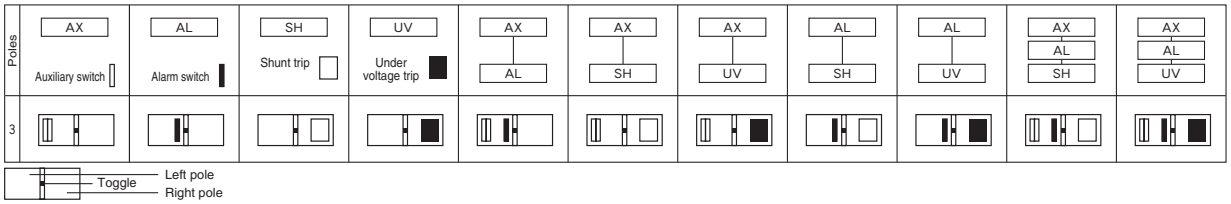

Outline dimensions (mm) S100-NM

Front-connected

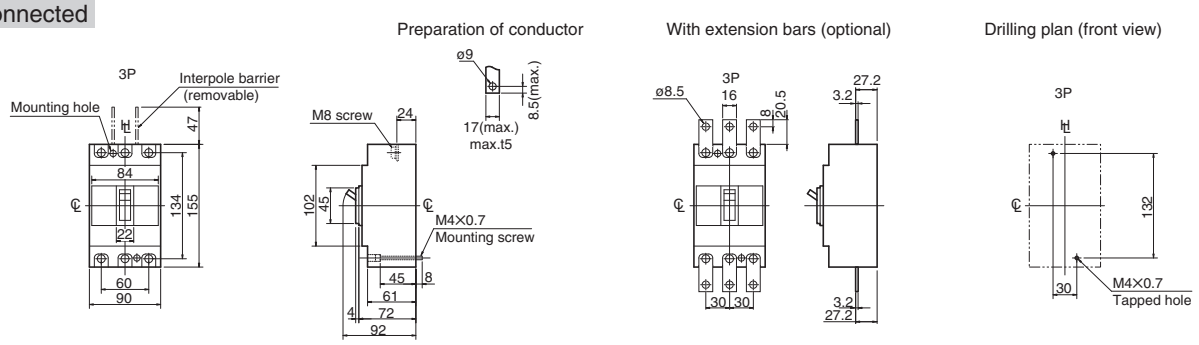

Rear-connected

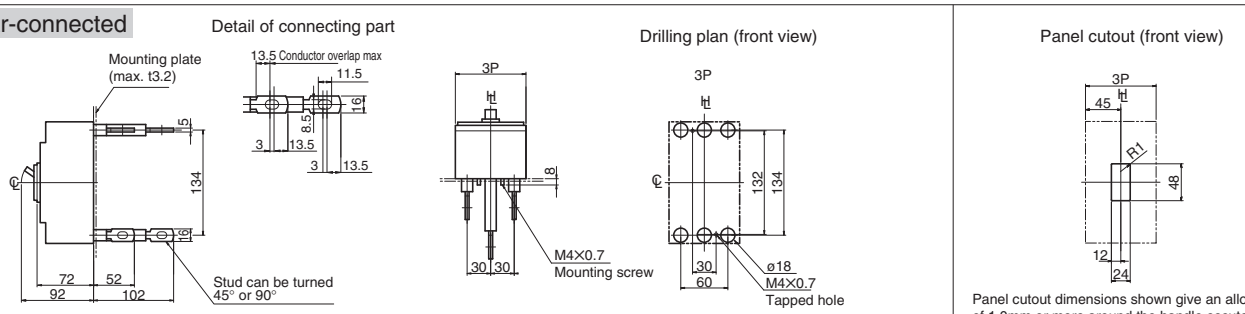

Note: Studs are factory installed in horizontal direction both on the line and load sides.

Panel cutout dimensions shown give an allowance of 1.0mm or more around the handle escutcheon.

Flush-mounted

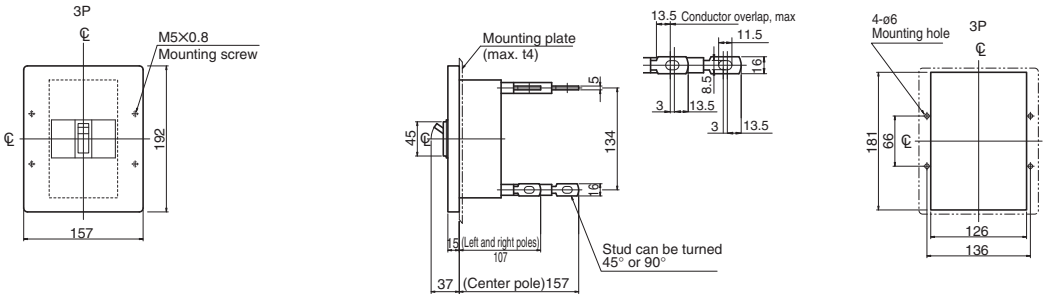

Note: Studs are factory installed in horizontal direction both on the line and load sides.

7 Characteristics and Outline Dimensions *TemBreak2*

Molded Case Circuit Breakers (225A Frame)

S225-NM

Ratings and Specifications

Type	S225-NM			
Number of poles	3			
■Ratings				
Motor rated capacity (kW) and breaker rated current (A) Calibrated at 40℃				

(A)	(kW) 200/220V	(kW) 400/440V
125	30	—
150	37	75
175	45	90
225	55	110

Note: Select an appropriate one depending on the total load current of the motor operator.

Rated insulation voltage 〔U_i〕 V			690			
Rated impulse withstand voltage 〔U_{imp}〕 kV			8			
■Rated breaking capacity, kA						
NK I_{cu}/I_{cs}(sym)	AC	690V	—			
		450V	25/25			
		240V	65/65			
	DC	250V	—			
IEC 60947-2 I_{cu}/I_{cs}(sym)	AC	440V	25/25			
		415V	35/35			
		380V	35/35			
		240V	65/65			
	DC	250V	—			
Weight (◉ marked standard type) kg			1.5			
■Connections and Mountings						
Front-connected (FC)	Terminal screws		◉			
	With extension bars		○ ㊸			
Rear-connected (RC)	Bolt studs		—			
	Flat bar studs		○			
Plug-in (PM) For switchboards	Standard (PMC)		—			
	High-performance (PMB)		—			
For distribution boards (PMC)			—			
Flush-mounted (FP) With flat bar studs			○			
Draw-out type (DR)			—			
TemPlug70 (PG)			○			
TemPlug45B (PG4)			—			
DIN rail mount			—			
Clip-in chassis mount			—			
■Accessories (optional)		**Symbol**				
Externally mounted: Motor operator		M C	●			
External operating handle	Breaker-mounted	H B	●			
	Door-mounted (variable depth)	H P	●			
Toggle extension		H A	—			
Mechanical interlock Slide type		M S	●			
Toggle holder		H H	●			
Toggle lock		H L	●			
Terminal cover	For front-connected	C F	●			
	For rear-connected and plug-in	C R	●			
Interpole barrier		B A	● ③			
Terminal block for lead		T F	●			
Door flange		D F	●			
■Standard specifications						
Overcurrent trip mechanism			Thermal-magnetic			
Trip button (color)			Yes (Red)			
Handle position indication (ON: Red, OFF: Green)			Yes			
Suitability for isolation			Yes			
CE marking			Yes			

Notes:
◉ : Standard. This configuration used unless otherwise specified. ○ : Optional standard. Specify when ordering.
● : "yes" or "available". — : "no" or "not available".
③ : Line side interpole barriers are supplied as standard. (Front connection only)
㊸ : For the extension bars, please palce the order separately in parts.

Time/Current characteristic curves

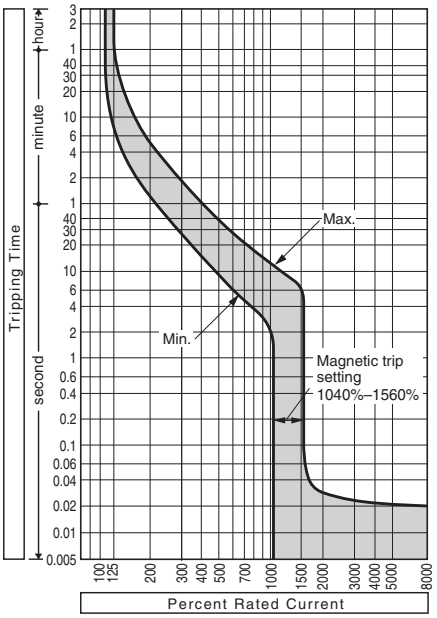

Ambient Compensating Curves

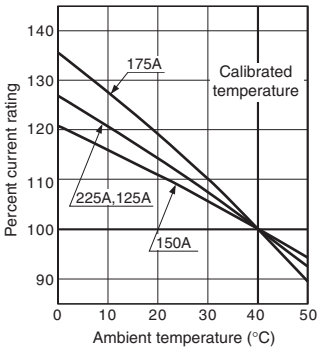

Combinations of Internally Mounted Accessories (Optional)

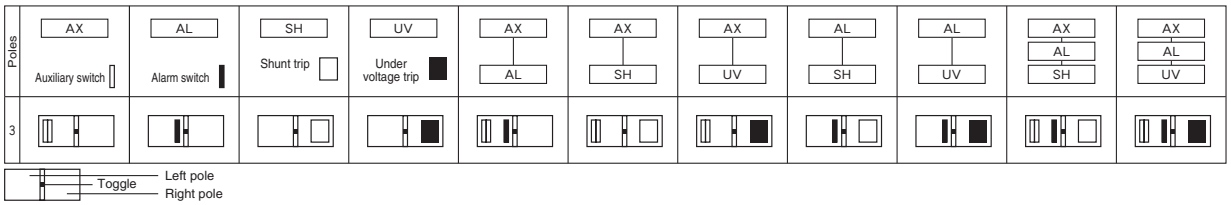

Outline dimensions (mm) S225-NM

Front-connected

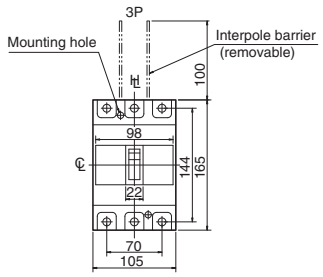

Preparation of conductor

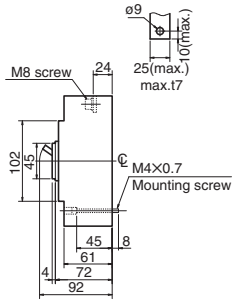

With extension bars (optional)

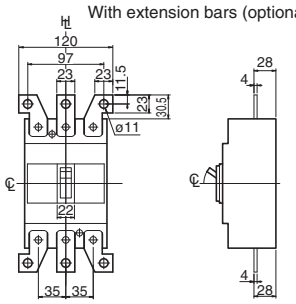

Drilling plan (front view)

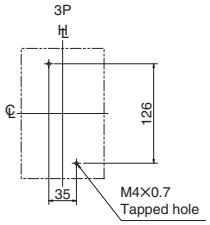

Rear-connected

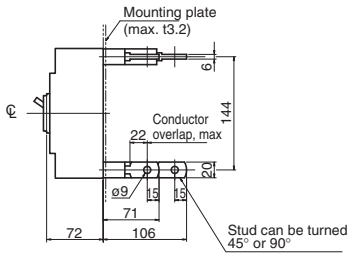

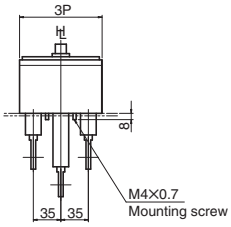

Drilling plan (front view)

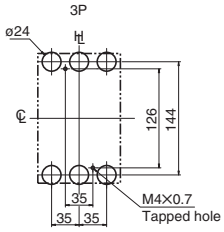

Note: Studs are factory installed in horizontal direction both on the line and load sides.

Panel cutout (front view)

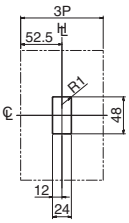

Panel cutout dimensions shown give an allowance of 1.0mm or more around the handle escutcheon.

Flush-mounted

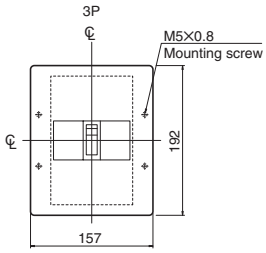

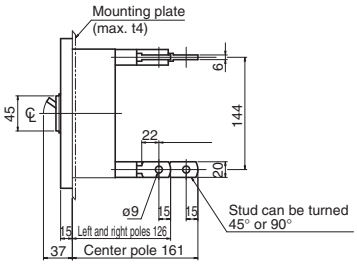

Panel cutout (front view)

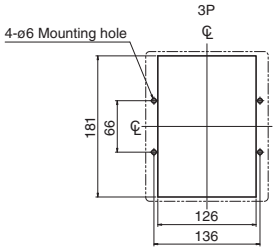

Note: Studs are factory installed in horizontal direction both on the line and load sides.

7 Characteristics and Outline Dimensions *TemBreak2*

Molded Case Circuit Breakers (100A Frame)

S100-NN

Ratings and Specifications

Type			S100-NN				
Number of poles			3	4			
■Ratings							
Rated current, A			100				
Rated insulation voltage 〔U_i〕 V			690				
Rated operational voltage V		AC	690				
		DC	250				
Rated short circuit making capacity, kA peak			3.6				
Rated short time withstand current, kA			2 (0.3sec)				
Rated impulse withstand voltage 〔U_{imp}〕 kV			8				
■Performance							
Utilization category	AC	690V	AC-23A				
IEC 60947-3	DC	250V	DC-22A				
Upstream breaker ㉙			S100-NF				
Weight (◉ marked standard type) kg			1.1	1.4			
■Connections and Mountings							
Front-connected (FC)	Terminal screws		◉				
	With extension bars		○ ㊸				
Rear-connected (RC)	Bolt studs		—				
	Flat bar studs		○				
Plug-in (PM) For switchboards	Standard (PMC)		○	—			
	High-performance (PMB)		○				
For distribution boards (PMC)			○	—			
Flush-mounted (FP) With flat bar studs			○				
Draw-out type (DR)			—				
TemPlug70 (PG)			○	—			
TemPlug45B (PG4)			—				
DIN rail mount			○				
Clip-in chassis mount			—				
■Accessories (optional)		**Symbol**					
Externally mounted: Motor operator		M C	●				
External operating handle	Breaker-mounted	H B	●				
	Door-mounted (variable depth)	H P	●				
Toggle extension		H A	—				
Mechanical interlock Slide type		M S	●				
Toggle holder		H H	●				
Toggle lock		H L	●				
Terminal cover	For front-connected	C F	●				
	For rear-connected and plug-in	C R	●				
Interpole barrier		B A	● ③				
Terminal block for lead		T F	●				
Door flange		D F	●				
■Standard specifications							
Trip button (color)			Yes (Red)				
Handle position indication (ON: Red, OFF: Green)			Yes				
Suitability for isolation			Yes				
CE marking			Yes				

Notes:

◉ : Standard. This configuration used unless otherwise specified.
○ : Optional standard. Specify when ordering.
● : "yes" or "available".
— : "no" or "not available".
③ : Line side interpole barriers are supplied as standard. (Front connection only)
㉙ : Required for overcurrent protection. Rated conditional short-circuit current [I_{cc}] will be the same as Rated short-circuit breaking capacity of upstream breaker.
㊸ : For the extension bars, please palce the order separately in parts.

Combinations of Internally Mounted Accessories (Optional)

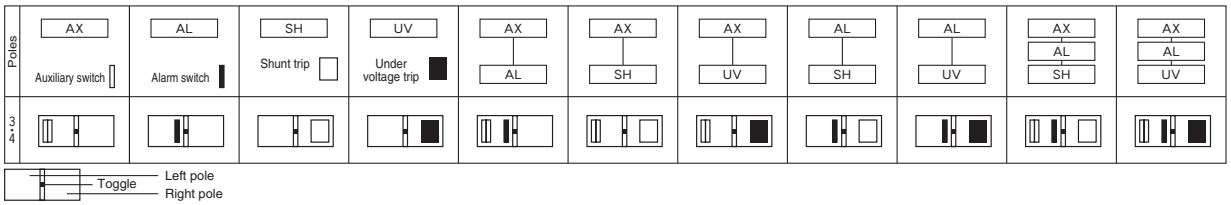

Outline dimensions (mm) S100-NN

Front-connected

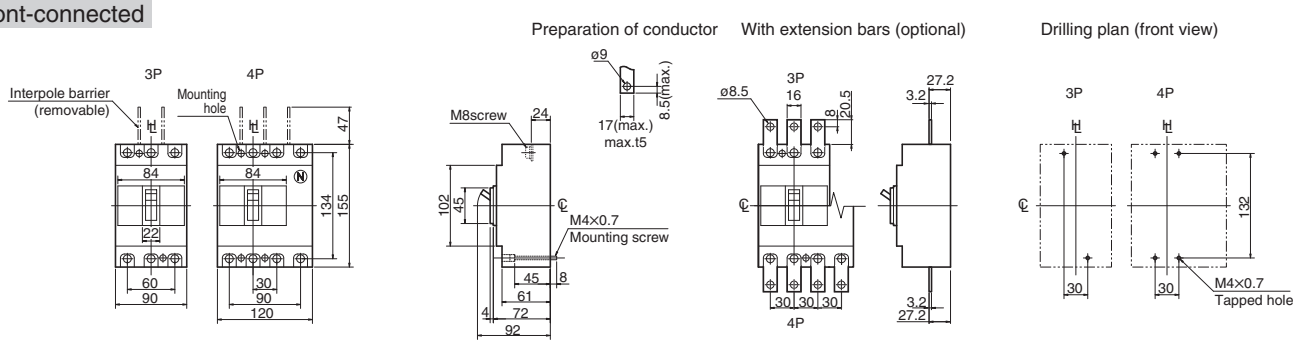

Rear-connected

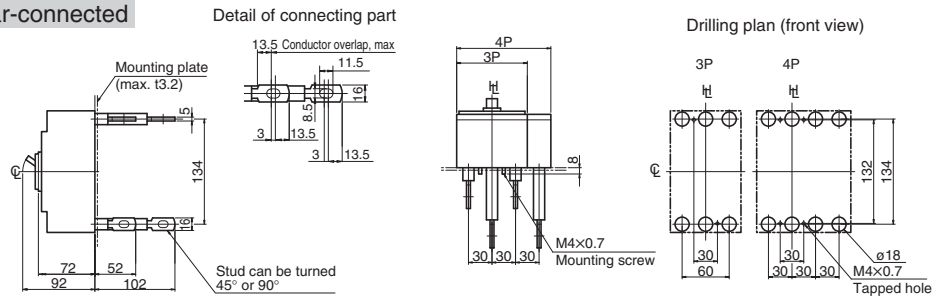

Note: Studs are factory installed in horizontal direction both on the line and load sides.

Panel cutout (front view)

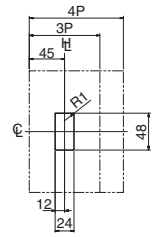

Panel cutout dimensions shown give an allowance of 1.0mm or more or more around the handle escutcheon.

Plug-in (Standard)

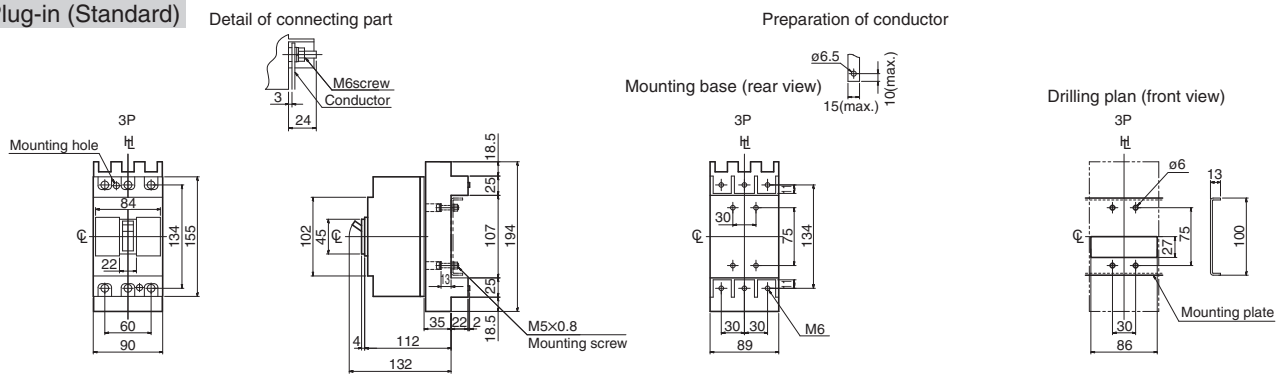

Plug-in (High-performance)

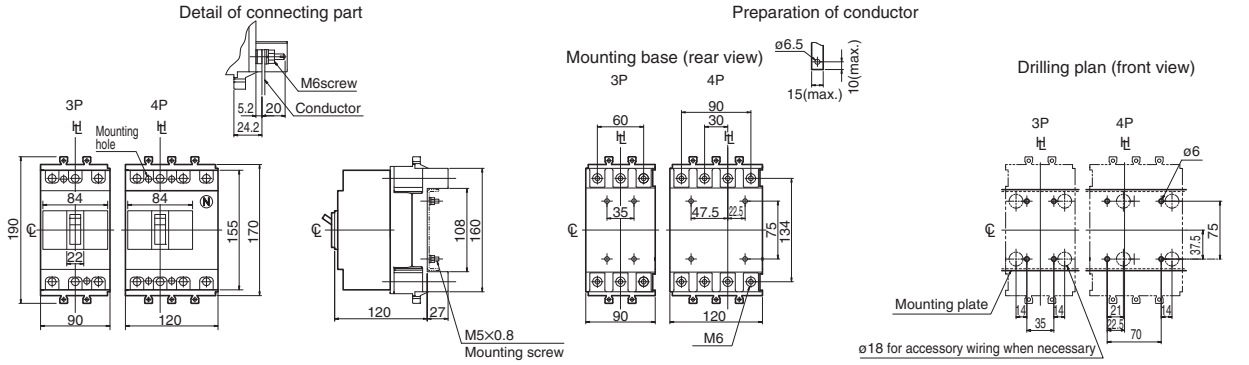

Flush-mounted

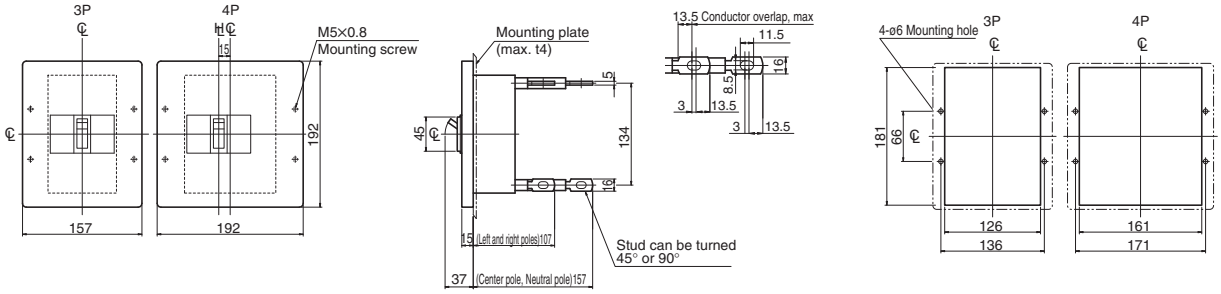

Note: Studs are factory installed in horizontal direction both on the line and load sides.

Molded Case Circuit Breakers (125A Frame)

S125-SN

Ratings and Specifications

Type			S125-SN					
Number of poles			3	4	3	4		
■Ratings								
Rated current, A			100		125			
Rated insulation voltage〔U_i〕 V			690		690			
Rated operational voltage V		AC	690		690			
		DC	250		250			
Rated short circuit making capacity, kA peak			2.8		2.8			
Rated short time withstand current, kA			2 (0.3sec)		2 (0.3sec)			
Rated impulse withstand voltage〔U_{imp}〕 kV			6		6			
■Performance								
Utilization category	AC	690V	AC-23A		AC-23A			
IEC 60947-3	DC	250V	DC-22A		DC-22A			
Upstream breaker ㉙			S125-SF		S125-SF			
Weight (◉ marked standard type) kg			0.7	0.9	0.7	0.9		
■Connections and Mountings								
Front-connected (FC)	Terminal screws		◉		◉			
	With extension bars		○ ㊸		○ ㊸			
Rear-connected (RC)	Bolt studs		—		—			
	Flat bar studs		○		○			
Plug-in (PM) For switchboards	Standard (PMC)		○	—	○	—		
	High-performance (PMB)		—		—			
For distribution boards (PMC)			○ ㊽	—	○ ㊽	—		
Flush-mounted (FP) With flat bar studs			○		○			
Draw-out type (DR)			—		—			
TemPlug70 (PG)			—		—			
TemPlug45B (PG4)			—		—			
DIN rail mount			○ ⑪		○ ⑪			
Clip-in chassis mount			—		—			
■Accessories (optional)		**Symbol**						
Externally mounted: Motor operator		M C	—		—			
External operating handle	Breaker-mounted	H B	●		●			
	Door-mounted (variable depth)	H P	●		●			
Toggle extension		H A	—		—			
Mechanical interlock ⑨	Slide type	M S	●		●			
Toggle holder		H H	●		●			
Toggle lock		H L	●		●			
Terminal cover	For front-connected	C F	●		●			
	For rear-connected and plug-in	C R	●		●			
Interpole barrier		B A	● ③		● ③			
Terminal block for lead		T F	●		●			
Door flange		D F	●		●			
■Standard specifications								
Trip button (color)			Yes (Red)		Yes (Red)			
Handle position indication (ON: Red, OFF: Green)			Yes		Yes			
Suitability for isolation			Yes		Yes			
CE marking			Yes		Yes			

Notes:

◉ : Standard. This configuration used unless otherwise specified.
○ : Optional standard. Specify when ordering.
● : "yes" or "available".
— : "no" or "not available".
③ : Line side interpole barriers are supplied as standard. (Front connection only)
⑨ : The mechanical interlock is not applicable to the draw-out type (DR).
⑪ : Provided with DIN rail adaptor.
㉙ : Required for overcurrent protection. Rated conditional short-circuit current [I_{cc}] will be the same as Rated short-circuit breaking capacity of upstream breaker.
㊸ : For the extension bars, please palce the order separately in parts.
㊽ : Specify PMD when the internal accessories are fitted.

Combinations of Internally Mounted Accessories (Optional)

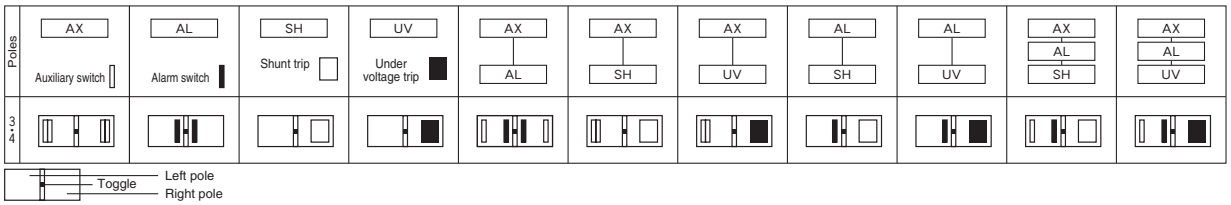

Outline dimensions (mm) S125-SN

Front-connected

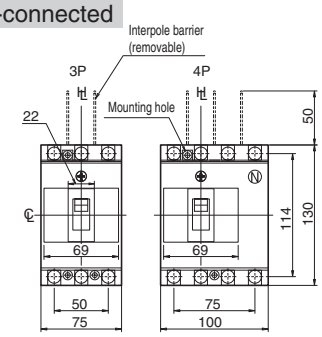

Preparation of conductor

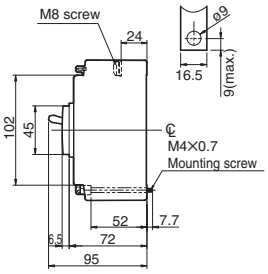

With extension bars (optional)

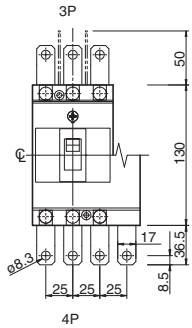

Drilling plan (front view)

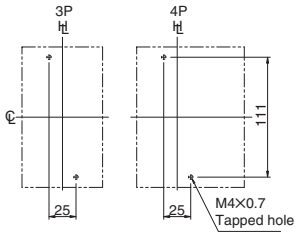

Rear-connected

Detail of connecting part

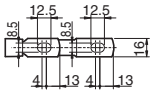

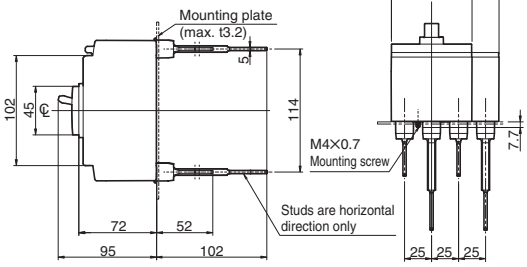

Drilling plan (front view)

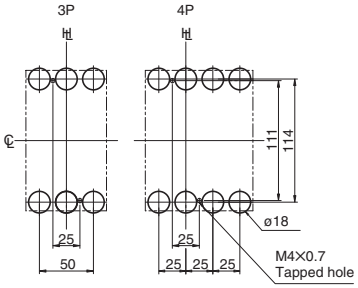

Panel cutout (front view)

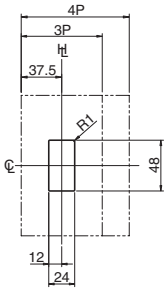

Panel cutout dimensions shown give an allowance of 1.0mm around the handle escutcheon.

Plug-in (Standard)

Detail of connecting part

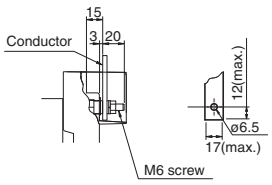

Preparation of conductor

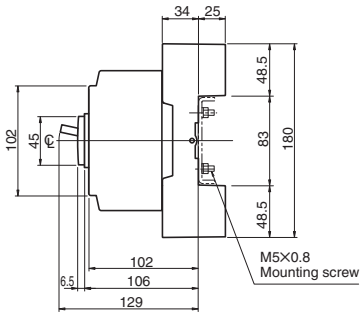

Mounting base (rear view)

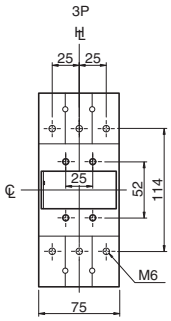

Drilling plan (front view)

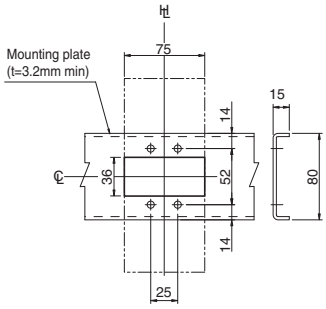

Flush-mounted

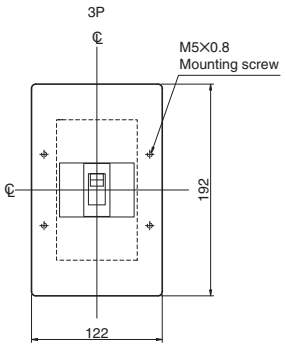

Detail of connecting part

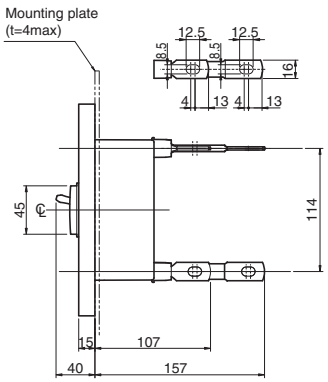

Drilling plan (front view)

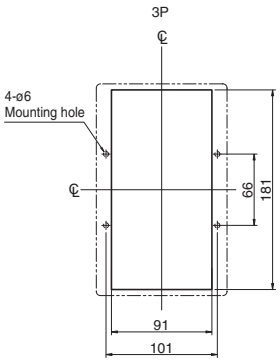

7 Characteristics and Outline Dimensions *TemBreak2*

Molded Case Circuit Breakers (125A Frame)

S125-NN

Ratings and Specifications

Type			S125-NN				
Number of poles			3	4			
■Ratings							
Rated current, A			125				
Rated insulation voltage 〔U_i〕 V			690				
Rated operational voltage V		AC	690				
		DC	250				
Rated short circuit making capacity, kA peak			3.6				
Rated short time withstand current, kA			2 (0.3sec)				
Rated impulse withstand voltage 〔U_{imp}〕 kV			8				
■Performance							
Utilization category	AC	690V	AC-23A				
IEC 60947-3	DC	250V	DC-22A				
Upstream breaker ㉙			S125-NF				
Weight (◉ marked standard type) kg			1.1	1.4			
■Connections and Mountings							
Front-connected (FC)	Terminal screws		◉				
	With extension bars		○ ㊸				
Rear-connected (RC)	Bolt studs		—				
	Flat bar studs		○				
Plug-in (PM) For switchboards	Standard (PMC)		○	—			
	High-performance (PMB)		○				
For distribution boards (PMC)			○	—			
Flush-mounted (FP) With flat bar studs			○				
Draw-out type (DR)			—				
TemPlug70 (PG)			○	—			
TemPlug45B (PG4)			—				
DIN rail mount			○				
Clip-in chassis mount			—				
■Accessories (optional)		**Symbol**					
Externally mounted: Motor operator		M C	●				
External operating handle	Breaker-mounted	H B	●				
	Door-mounted (variable depth)	H P	●				
Toggle extension		H A	—				
Mechanical interlock Slide type		M S	●				
Toggle holder		H H	●				
Toggle lock		H L	●				
Terminal cover	For front-connected	C F	●				
	For rear-connected and plug-in	C R	●				
Interpole barrier		B A	● ③				
Terminal block for lead		T F	●				
Door flange		D F	●				
■Standard specifications							
Trip button (color)			Yes (Red)				
Handle position indication (ON: Red, OFF: Green)			Yes				
Suitability for isolation			Yes				
CE marking			Yes				

Notes:

◉ : Standard. This configuration used unless otherwise specified.
○ : Optional standard. Specify when ordering.
● : "yes" or "available".
— : "no" or "not available".
③ : Line side interpole barriers are supplied as standard. (Front connection only)
㉙ : Required for overcurrent protection. Rated conditional short-circuit current [I_{cc}] will be the same as Rated short-circuit breaking capacity of upstream breaker.
㊸ : For the extension bars, please palce the order separately in parts.

Combinations of Internally Mounted Accessories (Optional)

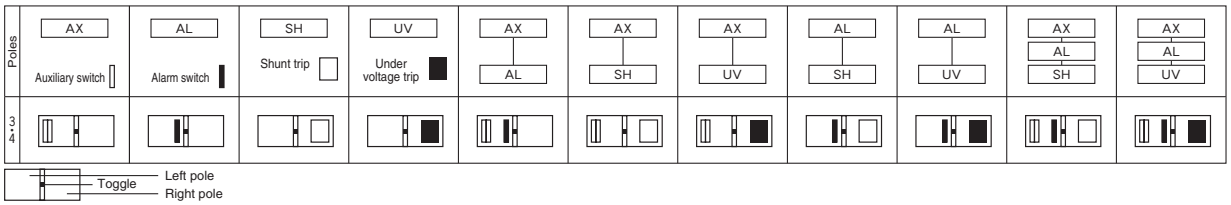

Outline dimensions (mm) S125-NN

Front-connected

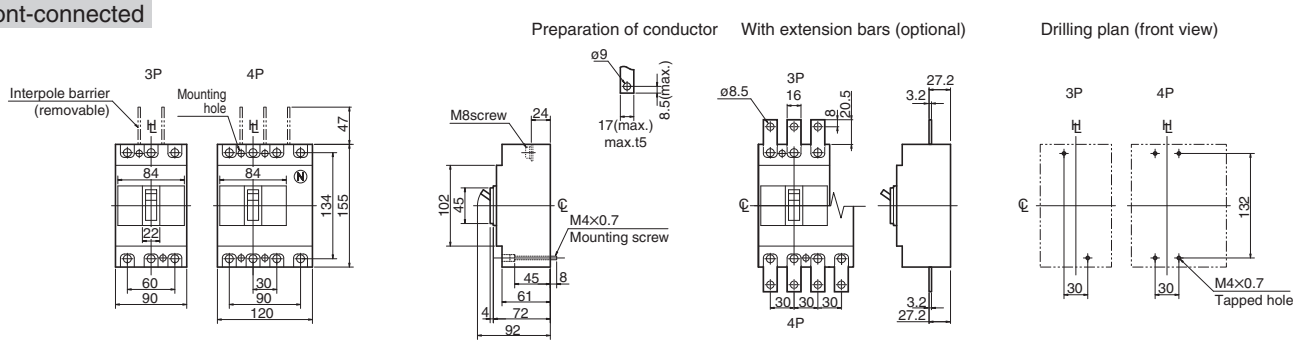

Rear-connected

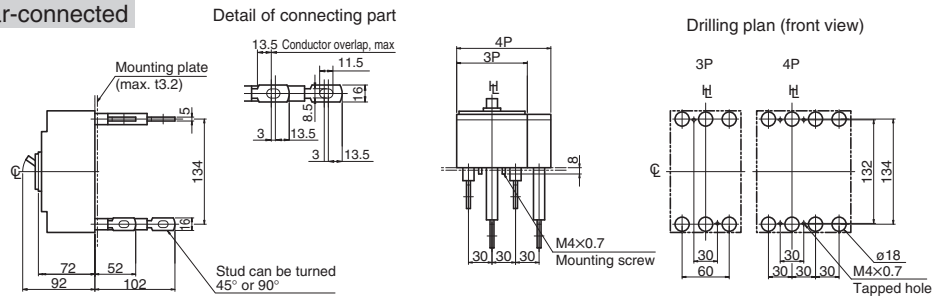

Note: Studs are factory installed in horizontal direction both on the line and load sides.

Panel cutout (front view)

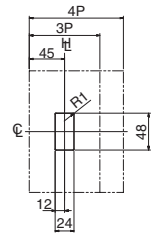

Panel cutout dimensions shown give an allowance of 1.0mm or more or more around the handle escutcheon.

Plug-in (Standard)

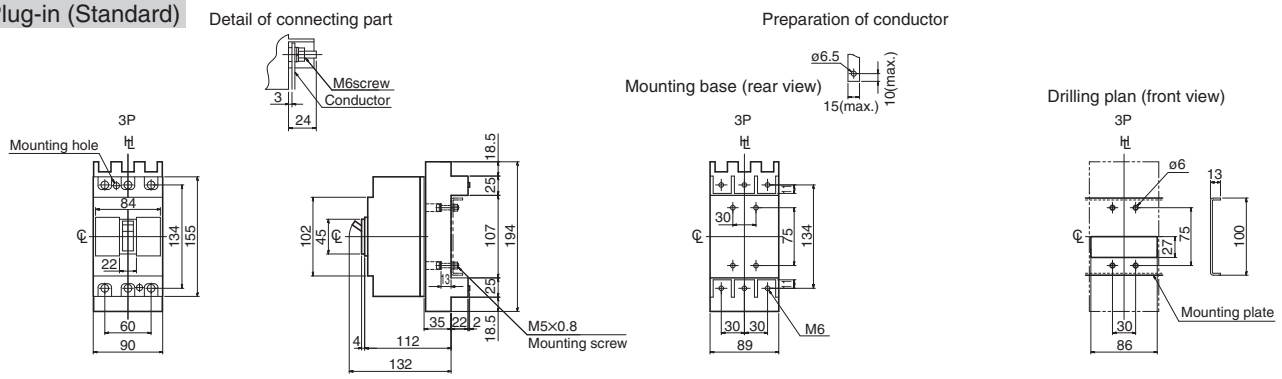

Plug-in (High-performance)

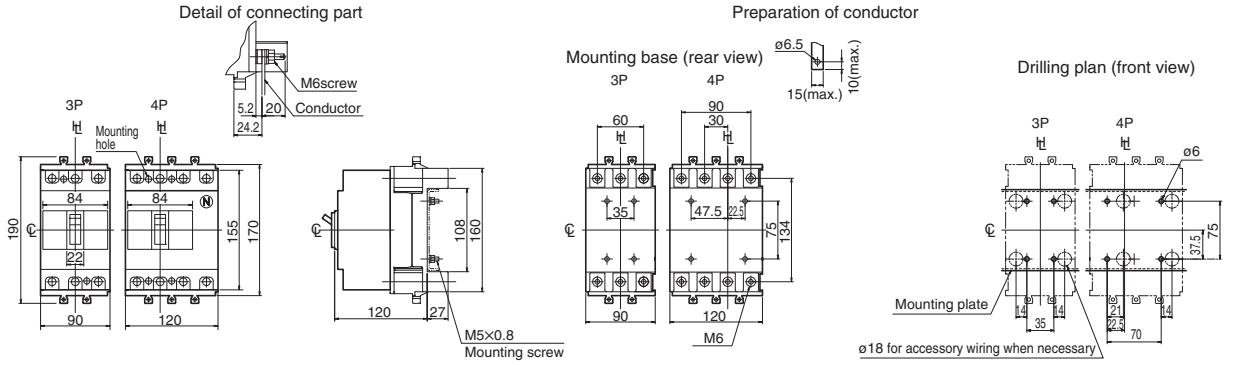

Flush-mounted

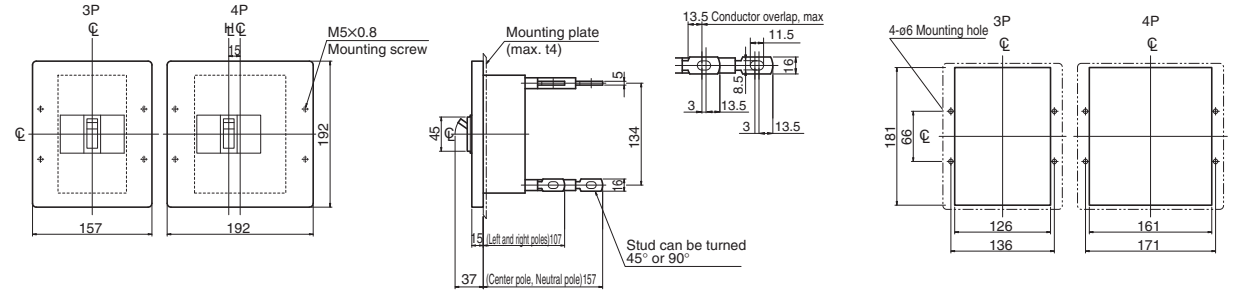

Note: Studs are factory installed in horizontal direction both on the line and load sides.

Molded Case Circuit Breakers (250A Frame)

S250-SN

Ratings and Specifications

Type			S250-SN					
Number of poles			3	4	3	4		
■Ratings								
Rated current, A			225		250			
Rated insulation voltage〔U_i〕 V			690		690			
Rated operational voltage V		AC	690		690			
		DC	250		250			
Rated short circuit making capacity, kA peak			6		6			
Rated short time withstand current, kA			3 (0.3sec)		3 (0.3sec)			
Rated impulse withstand voltage〔U_{imp}〕 kV			8		8			
■Performance								
Utilization category	AC	690V	AC-23A		AC-23A			
IEC 60947-3	DC	250V	DC-22A		DC-22A			
Upstream breaker ㉙			S250-SF		S250-SF			
Weight (◉ marked standard type) kg			1.5	1.9	1.5	1.9		
■Connections and Mountings								
Front-connected (FC)	Terminal screws		◉		◉			
	With extension bars		○ ㊸		○ ㊸			
Rear-connected (RC)	Bolt studs		—		—			
	Flat bar studs		○		○			
Plug-in (PM) For switchboards	Standard (PMC)		○	—	○	—		
	High-performance (PMB)		—		—			
For distribution boards (PMC)			—		—			
Flush-mounted (FP) With flat bar studs			○		○			
Draw-out type (DR)			—		—			
TemPlug70 (PG)			○	—	○	—		
TemPlug45B (PG4)			—		—			
DIN rail mount			—		—			
Clip-in chassis mount			—		—			
■Accessories (optional)		**Symbol**						
Externally mounted: Motor operator		M C	●		●			
External operating handle	Breaker-mounted	H B	●		●			
	Door-mounted (variable depth)	H P	●		●			
Toggle extension		H A	—		—			
Mechanical interlock Slide type		M S	●		●			
Toggle holder		H H	●		●			
Toggle lock		H L	●		●			
Terminal cover	For front-connected	C F	●		●			
	For rear-connected and plug-in	C R	●		●			
Interpole barrier		B A	● ③		● ③			
Terminal block for lead		T F	●		●			
Door flange		D F	●		●			
■Standard specifications								
Trip button (color)			Yes (Red)		Yes (Red)			
Handle position indication (ON: Red, OFF: Green)			Yes		Yes			
Suitability for isolation			Yes		Yes			
CE marking			Yes		Yes			

Notes:

◉ : Standard. This configuration used unless otherwise specified.
○ : Optional standard. Specify when ordering.
● : "yes" or "available".
— : "no" or "not available".
③ : Line side interpole barriers are supplied as standard. (Front connection only)
㉙ : Required for overcurrent protection. Rated conditional short-circuit current [I_{cc}] will be the same as Rated short-circuit breaking capacity of upstream breaker.
㊸ : For the extension bars, please palce the order separately in parts.

Combinations of Internally Mounted Accessories (Optional)

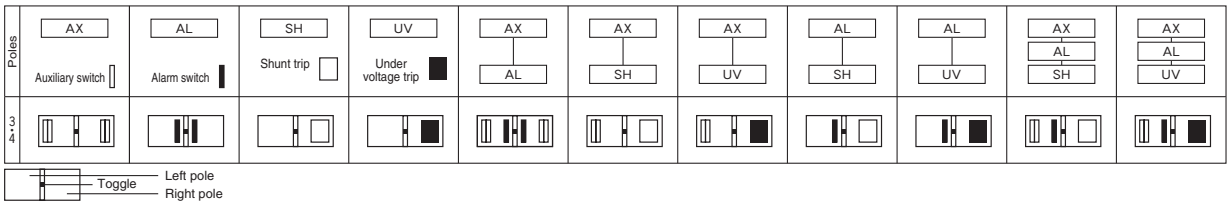

Outline dimensions (mm) S250-SN

Front-connected

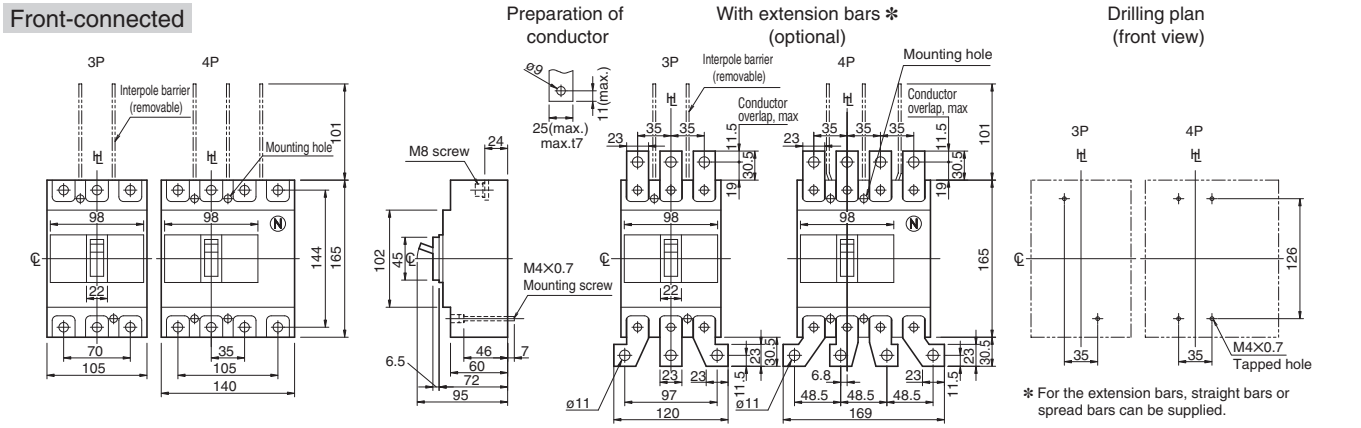

Rear-connected

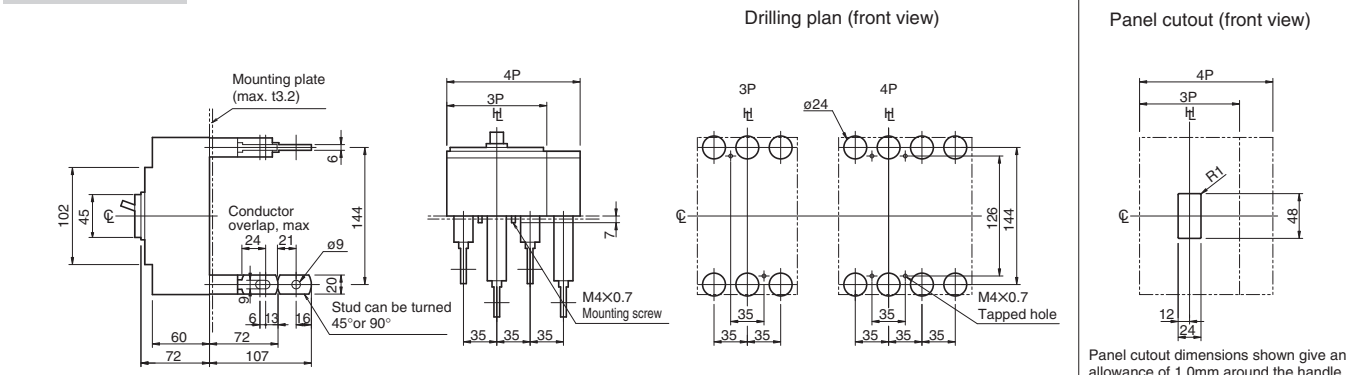

Plug-in (Standard)

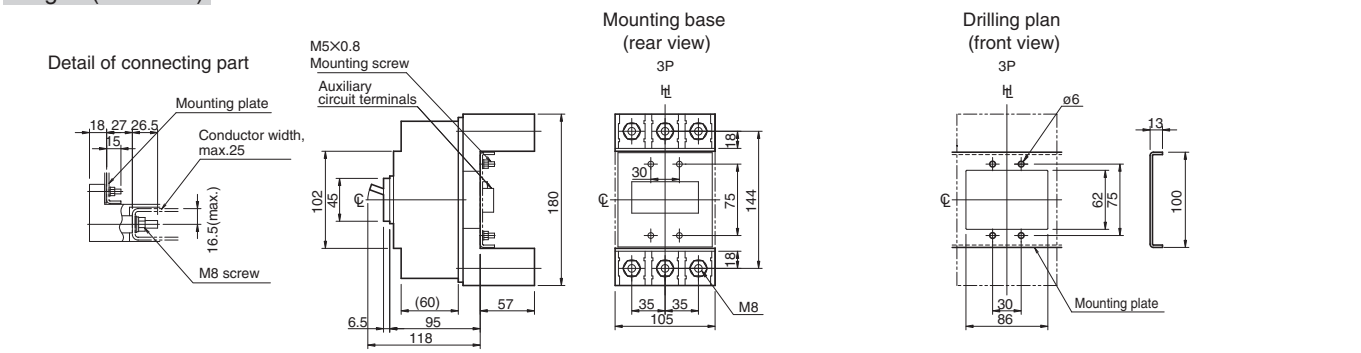

Flush-mounted

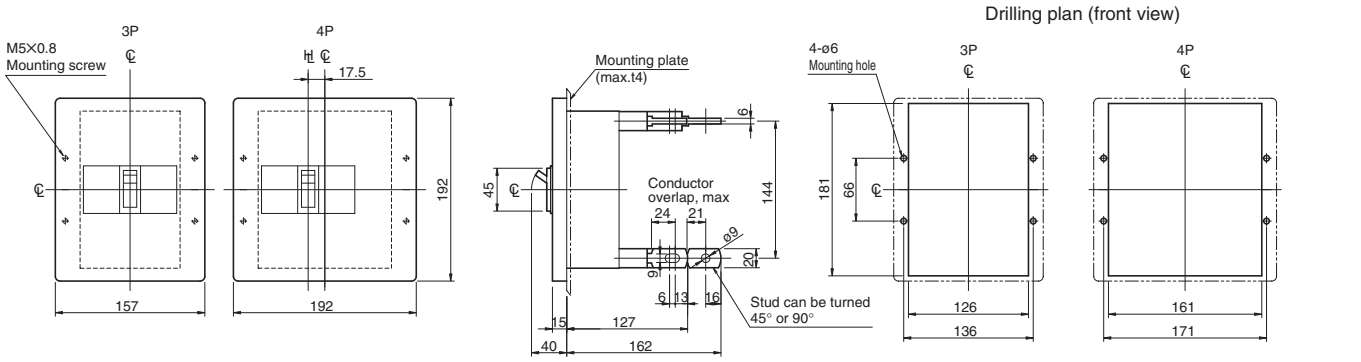

7 Characteristics and Outline Dimensions *TemBreak2*

Molded Case Circuit Breakers (400A Frame)

S400-NN

Ratings and Specifications

Type			S400-NN				
Number of poles			3	4			
■Ratings							
Rated current, A			400				
Rated insulation voltage 〔U_i〕 V			690				
Rated operational voltage V		AC	690				
		DC	250				
Rated short circuit making capacity, kA peak			9				
Rated short time withstand current, kA			5 (0.3sec)				
Rated impulse withstand voltage 〔U_{imp}〕 kV			8				
■Performance							
Utilization category	AC	690V	AC-23A				
IEC 60947-3	DC	250V	DC-22A				
Upstream breaker ㉙			S400-NF				
Weight (◉ marked standard type) kg			4.2	5.6			
■Connections and Mountings							
Front-connected (FC)	Terminal screws		◉				
	With extension bars		○ (BAR)				
Rear-connected (RC)	Bolt studs		—				
	Flat bar studs		○				
Plug-in (PM) For switchboards	Standard (PMC)		○	—			
	High-performance (PMB)		○				
For distribution boards (PMC)			—				
Flush-mounted (FP) With flat bar studs			○				
Draw-out type (DR)			▲				
TemPlug70 (PG)			○	—			
TemPlug45B (PG4)			—				
DIN rail mount			—				
Clip-in chassis mount			—				
■Accessories (optional)		**Symbol**					
Externally mounted: Motor operator		M C	●				
External operating handle	Breaker-mounted	H B	●				
	Door-mounted (variable depth)	H P	●				
Toggle extension		H A	●				
Mechanical interlock⑨ Slide type		M S	●				
Toggle holder		H H	●				
Toggle lock		H L	●				
Terminal cover	For front-connected	C F	●				
	For rear-connected and plug-in	C R	●				
Interpole barrier		B A	● ③				
Terminal block for lead		T F	●				
Door flange		D F	●				
■Standard specifications							
Trip button (color)			Yes (Red)				
Handle position indication (ON: Red, OFF: Green)			Yes				
Suitability for isolation			Yes				
CE marking			Yes				

Notes:

◉ : Standard. This configuration used unless otherwise specified.
○ : Optional standard. Specify when ordering.
▲ : Semi-standard.
● : "yes" or "available".
— : "no" or "not available".
③ : Line side interpole barriers are supplied as standard. (Front connection only)
⑨ : The mechanical interlock is not applicable to the draw-out type (DR).
㉙ : Required for overcurrent protection. Rated conditional short-circuit current [I_{cc}] will be the same as Rated short-circuit breaking capacity of upstream breaker.

Combinations of Internally Mounted Accessories (Optional)

Poles	AX	AL	SH	UV	AX–AL	AX–SH	AX–UV	AL–SH	AL–UV	AX–AL–SH	AX–AL–UV
	Auxiliary switch	Alarm switch	Shunt trip	Under voltage trip							
3·4											

Outline dimensions (mm) S400-NN

Front-connected

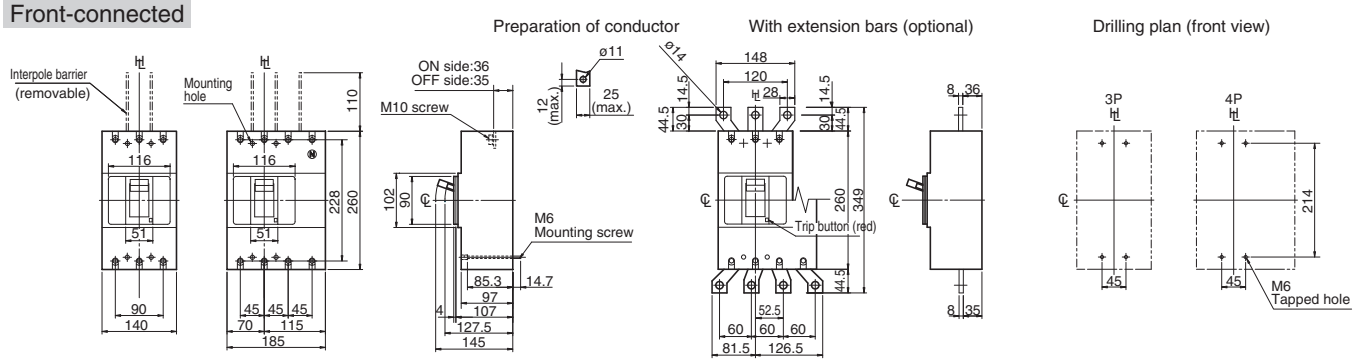

Rear-connected

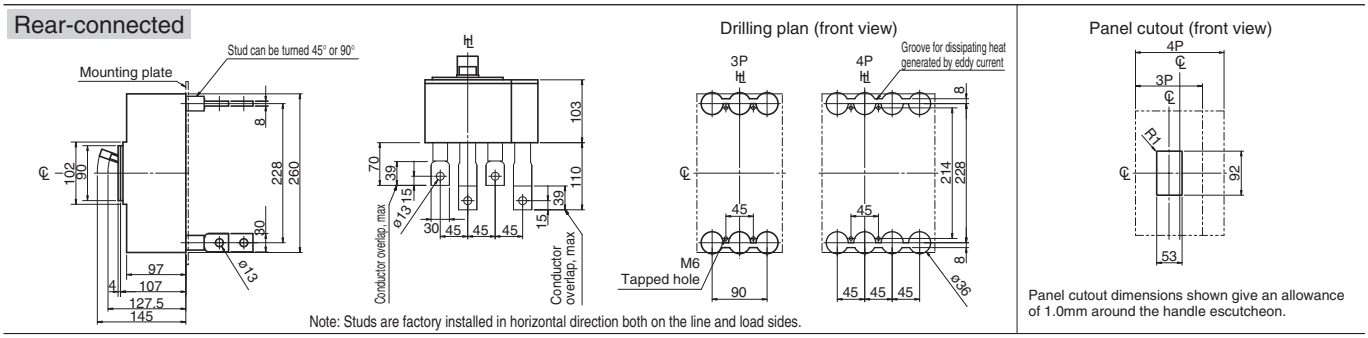

Note: Studs are factory installed in horizontal direction both on the line and load sides.

Panel cutout dimensions shown give an allowance of 1.0mm around the handle escutcheon.

Plug-in (Standard)

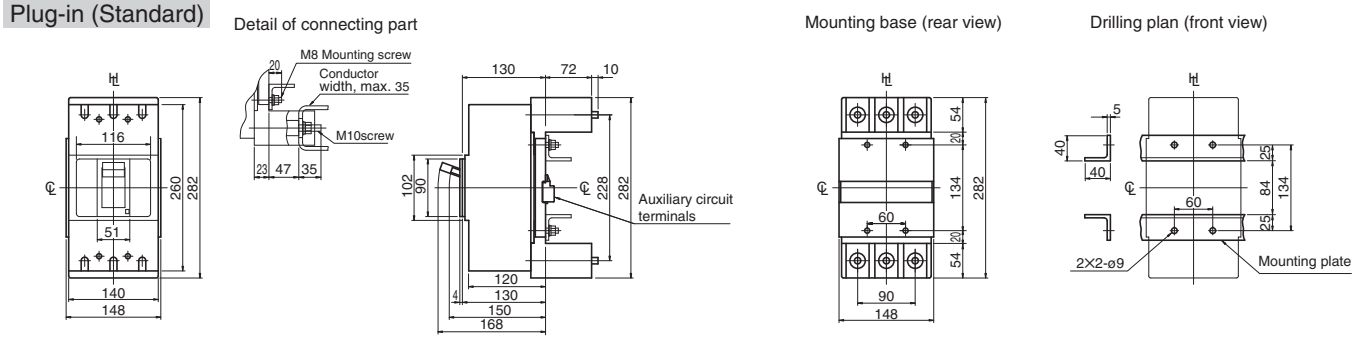

Plug-in (High-performance)

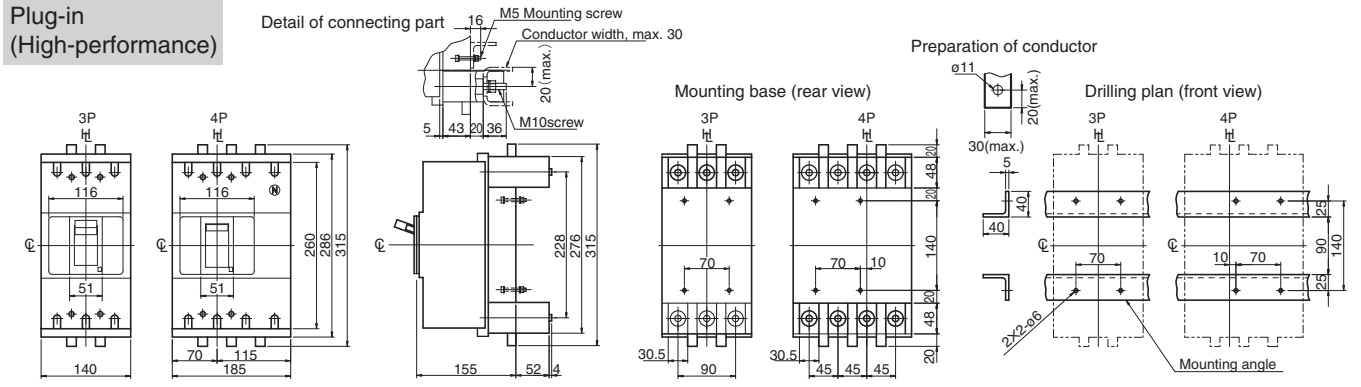

Flush-mounted

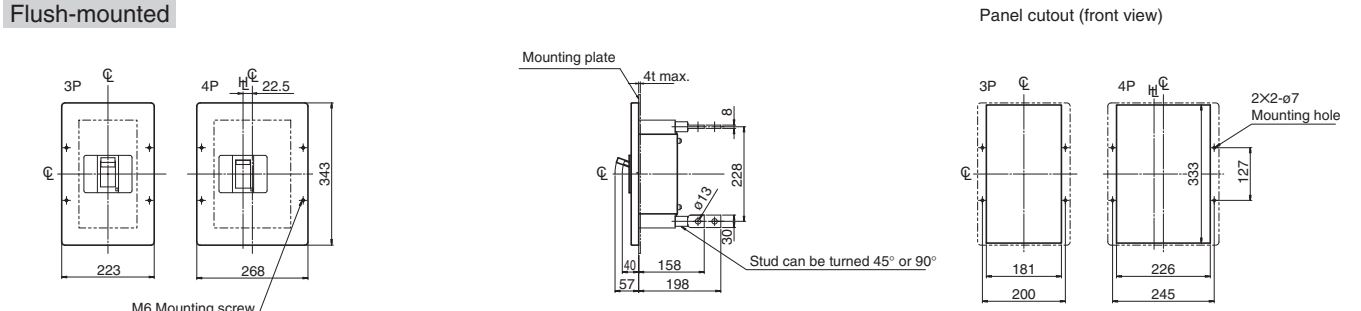

Note: Studs are factory installed in horizontal direction both on the line and load sides.

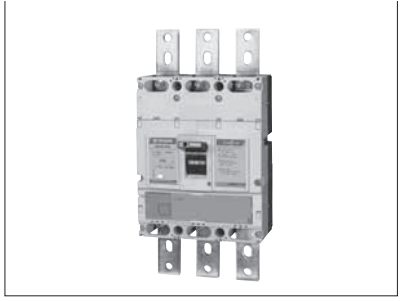

7 Characteristics and Outline Dimensions *TemBreak2*

Molded Case Circuit Breakers (630A Frame)

S630-GN

Ratings and Specifications

Type			S630-GN				
Number of poles			3	4			
■Ratings							
Rated current, A			630				
Rated insulation voltage 〔U_i〕 V			690				
Rated operational voltage V		AC	690				
		DC	250				
Rated short circuit making capacity, kA peak			17				
Rated short time withstand current, kA			10 (0.3sec)				
Rated impulse withstand voltage 〔U_{imp}〕 kV			8				
■Performance							
Utilization category	AC	690V	AC-23A				
IEC 60947-3	DC	250V	DC-22A				
Upstream breaker ㉙			S630-NF				
Weight (◉ marked standard type) kg			8.0	11.0			
■Connections and Mountings							
Front-connected (FC)	Terminal screws		—				
	With extension bars		◉				
Rear-connected (RC)	Bolt studs		—				
	Flat bar studs		○				
Plug-in (PM) For switchboards	Standard (PMC)		○	—			
	High-performance (PMB)		○				
For distribution boards (PMC)			—				
Flush-mounted (FP) With flat bar studs			○				
Draw-out type (DR)			▲				
TemPlug70 (PG)			○	—			
TemPlug45B (PG4)			—				
DIN rail mount			—				
Clip-in chassis mount			—				
■Accessories (optional)		**Symbol**					
Externally mounted: Motor operator		M C	●				
External operating handle	Breaker-mounted	H B	●				
	Door-mounted (variable depth)	H P	●				
Toggle extension ⑨		H A	●				
Mechanical interlock ⑨ Slide type		M S	●				
Toggle holder ⑨		H H	●				
Toggle lock ⑨		H L					
Terminal cover	For front-connected ⑨	C F	●				
	For rear-connected and plug-in	C R	●				
Interpole barrier ⑨		B A	● ③				
Terminal block for lead ⑨		T F	●				
Door flange ⑨		D F	●				
■Standard specifications							
Trip button (color)			Yes (Red)				
Handle position indication (ON: Red, OFF: Green)			Yes				
Suitability for isolation			Yes				
CE marking			Yes				

Notes:

◉ : Standard. This configuration used unless otherwise specified.
○ : Optional standard. Specify when ordering.
▲ : Semi-standard.
● : "yes" or "available".
— : "no" or "not available".
③ : Line side interpole barriers are supplied as standard. (Front connection only)
⑨ : Not applicable to the draw-out type (DR).
㉙ : Required for overcurrent protection. Rated conditional short-circuit current [I_{cc}] will be the same as Rated short-circuit breaking capacity of upstream breaker.

Combinations of Internally Mounted Accessories (Optional)

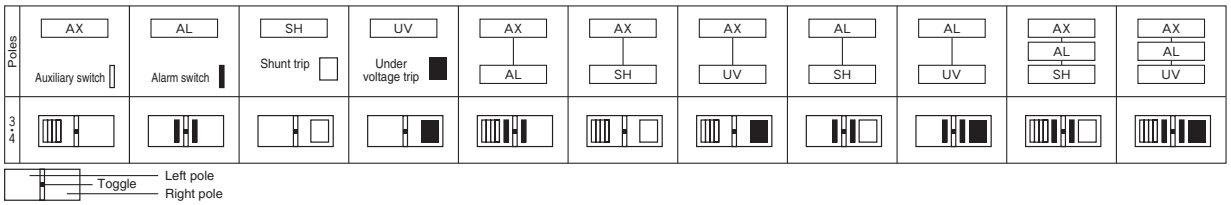

Outline dimensions (mm) S630-GN

Front-connected

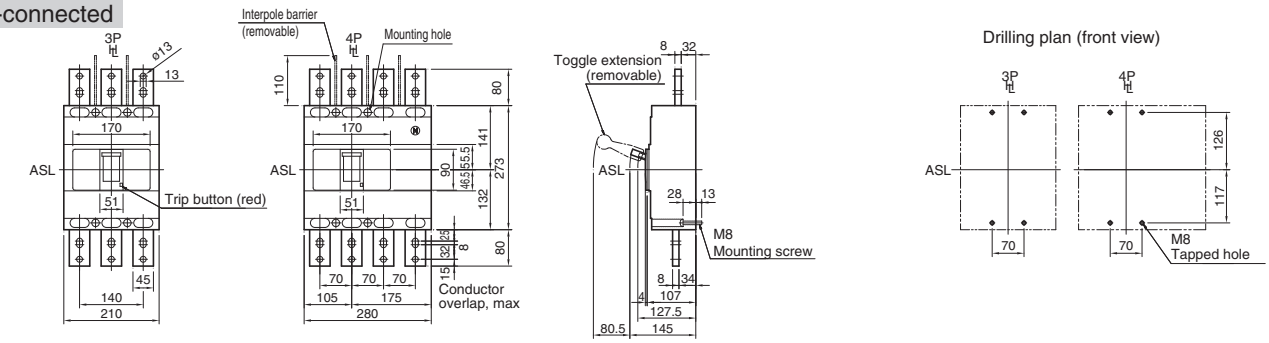

Rear-connected

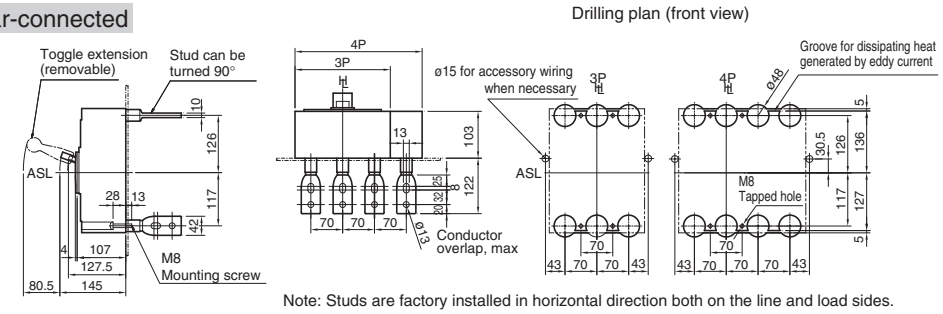

Note: Studs are factory installed in horizontal direction both on the line and load sides.

Panel cutout (front view)

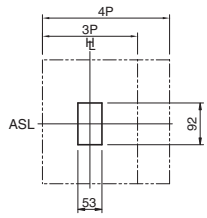

Panel cutout dimensions shown give an allowance of 1.0mm around the handle escutcheon.

Plug-in (Standard)

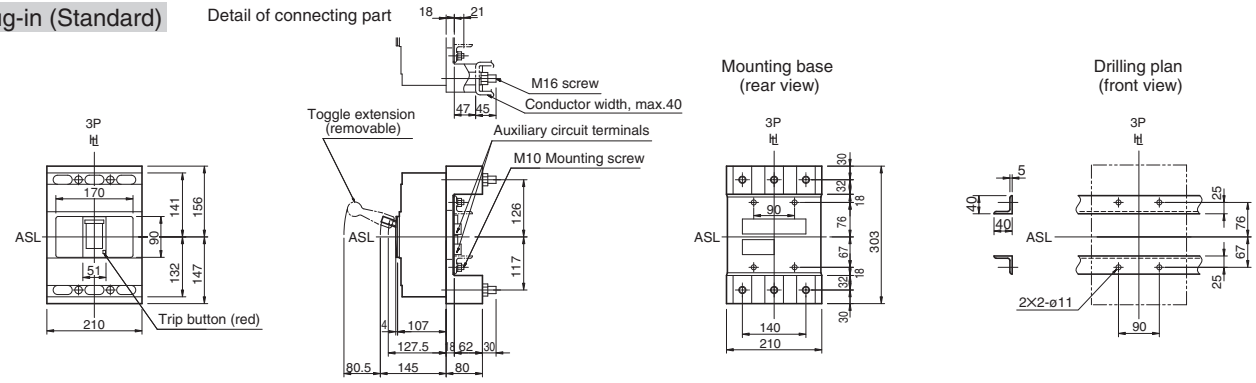

Plug-in (High-performance)

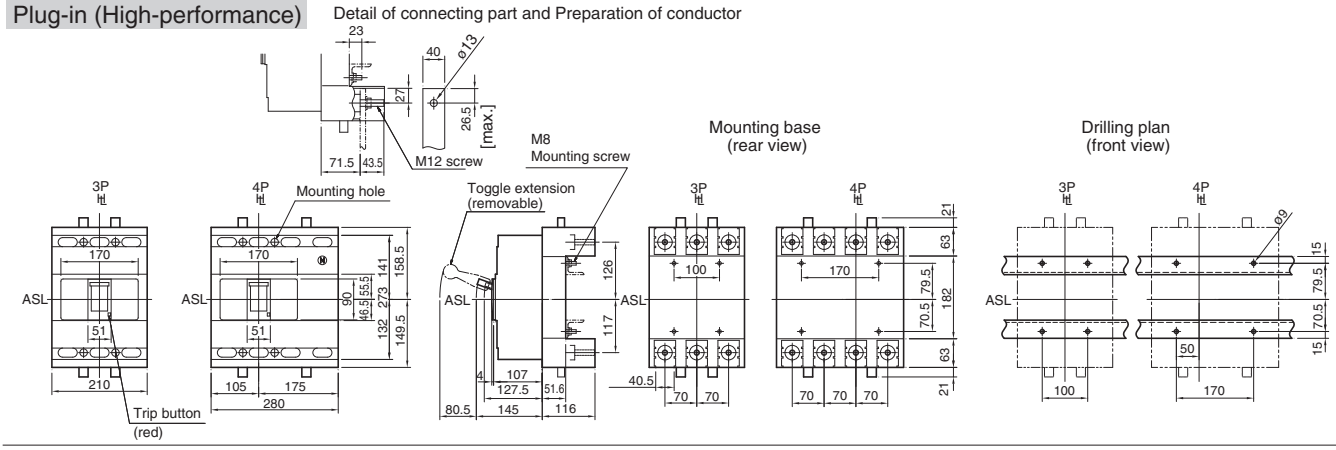

Flush-mounted

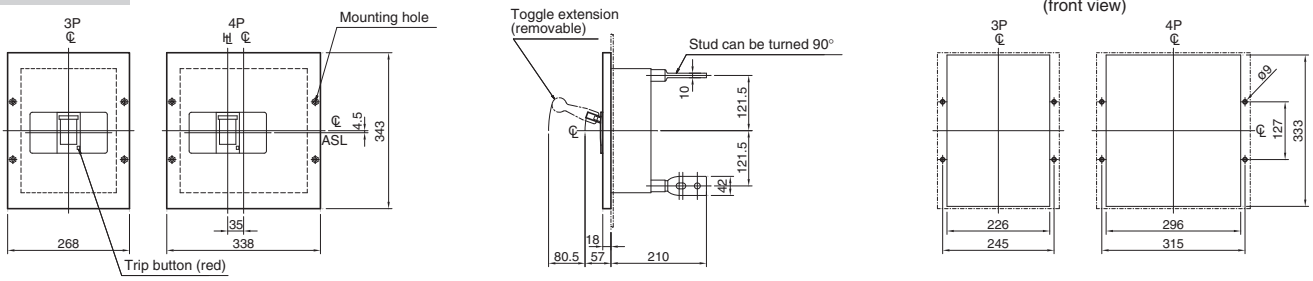

Note: Studs are factory installed in horizontal direction both on the line and load sides.

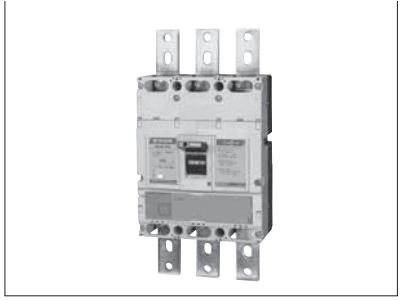

7 Characteristics and Outline Dimensions *TemBreak2*

Molded Case Circuit Breakers (800A Frame)

S800-NN

Ratings and Specifications

Type			S800-NN				
Number of poles			3	4			
■Ratings							
Rated current, A			800				
Rated insulation voltage〔U_i〕 V			690				
Rated operational voltage V		AC	690				
		DC	250				
Rated short circuit making capacity, kA peak			17				
Rated short time withstand current, kA			10 (0.3sec)				
Rated impulse withstand voltage〔U_{imp}〕 kV			8				
■Performance							
Utilization category	AC	690V	AC-23A				
IEC 60947-3	DC	250V	DC-22A				
Upstream breaker ㉙			S800-NF				
Weight (◉ marked standard type) kg			8.0	11.5			
■Connections and Mountings							
Front-connected (FC)	Terminal screws		—				
	With extension bars		◉				
Rear-connected (RC)	Bolt studs		—				
	Flat bar studs		○				
Plug-in (PM) For switchboards	Standard (PMC)		○	—			
	High-performance (PMB)		○				
For distribution boards (PMC)			—				
Flush-mounted (FP) With flat bar studs			○				
Draw-out type (DR)			▲				
TemPlug70 (PG)			—				
TemPlug45B (PG4)			—				
DIN rail mount			—				
Clip-in chassis mount			—				
■Accessories (optional)		**Symbol**					
Externally mounted: Motor operator		M C	●				
External operating handle	Breaker-mounted	H B	●				
	Door-mounted (variable depth)	H P	●				
Toggle extension ⑨		H A	●				
Mechanical interlock ⑨ Slide type		M S	●				
Toggle holder ⑨		H H	●				
Toggle lock ⑨		H L					
Terminal cover	For front-connected ⑨	C F	●				
	For rear-connected and plug-in	C R	●				
Interpole barrier ⑨		B A	● ③				
Terminal block for lead ⑨		T F	●				
Door flange ⑨		D F	●				
■Standard specifications							
Trip button (color)			Yes (Red)				
Handle position indication (ON: Red, OFF: Green)			Yes				
Suitability for isolation			Yes				
CE marking			Yes				

Notes:

◉ : Standard. This configuration used unless otherwise specified.
○ : Optional standard. Specify when ordering.
▲ : Semi-standard.
● : "yes" or "available".
— : "no" or "not available".
③ : Line side interpole barriers are supplied as standard. (Front connection only)
⑨ : Not applicable to the draw-out type (DR).
㉙ : Required for overcurrent protection. Rated conditional short-circuit current [I_{cc}] will be the same as Rated short-circuit breaking capacity of upstream breaker.

Combinations of Internally Mounted Accessories (Optional)

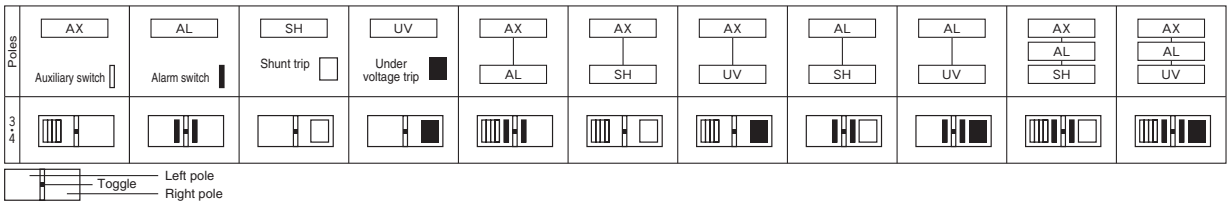

Outline dimensions (mm) S800-NN

Front-connected

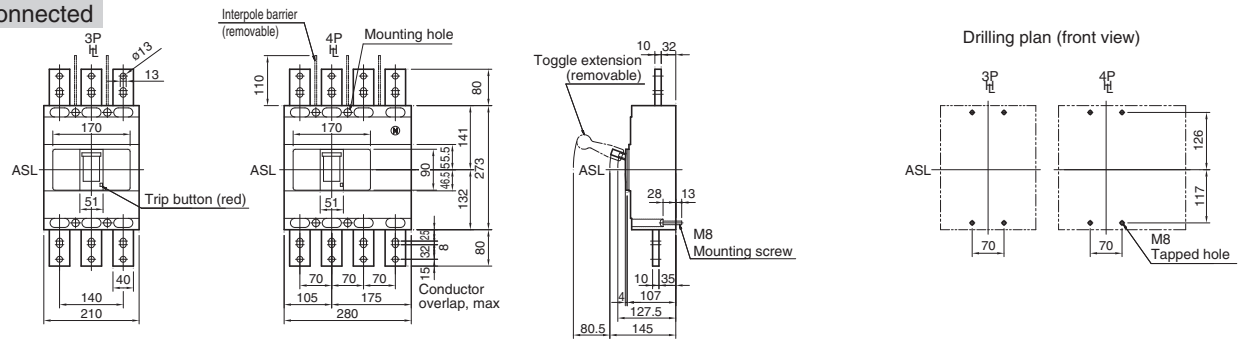

Rear-connected

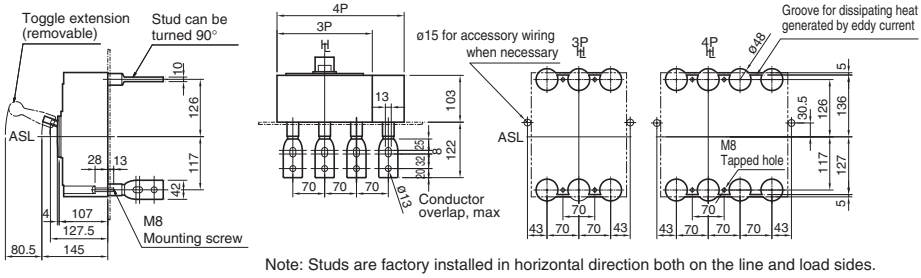

Note: Studs are factory installed in horizontal direction both on the line and load sides.

Panel cutout (front view)

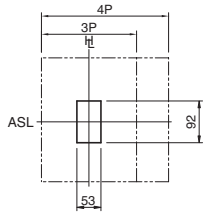

Panel cutout dimensions shown give an allowance of 1.0mm around the handle escutcheon.

Plug-in (Standard)

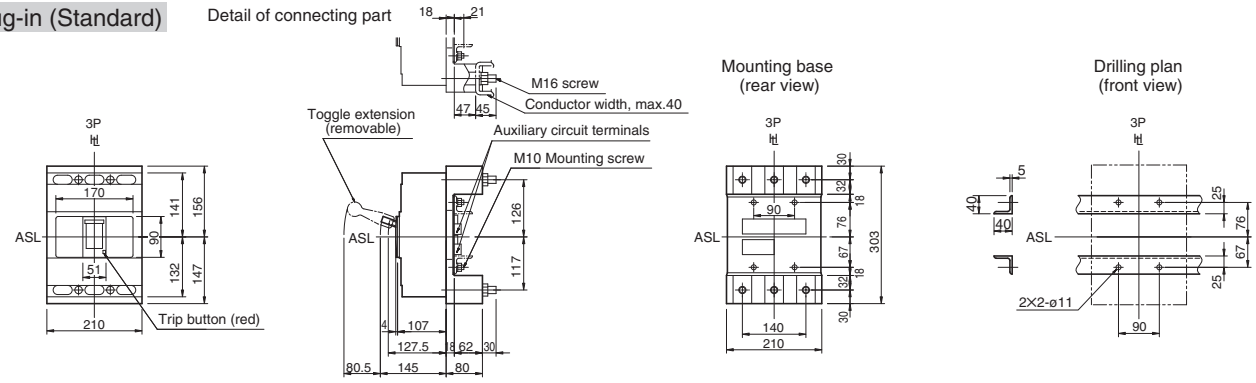

Plug-in (High-performance)

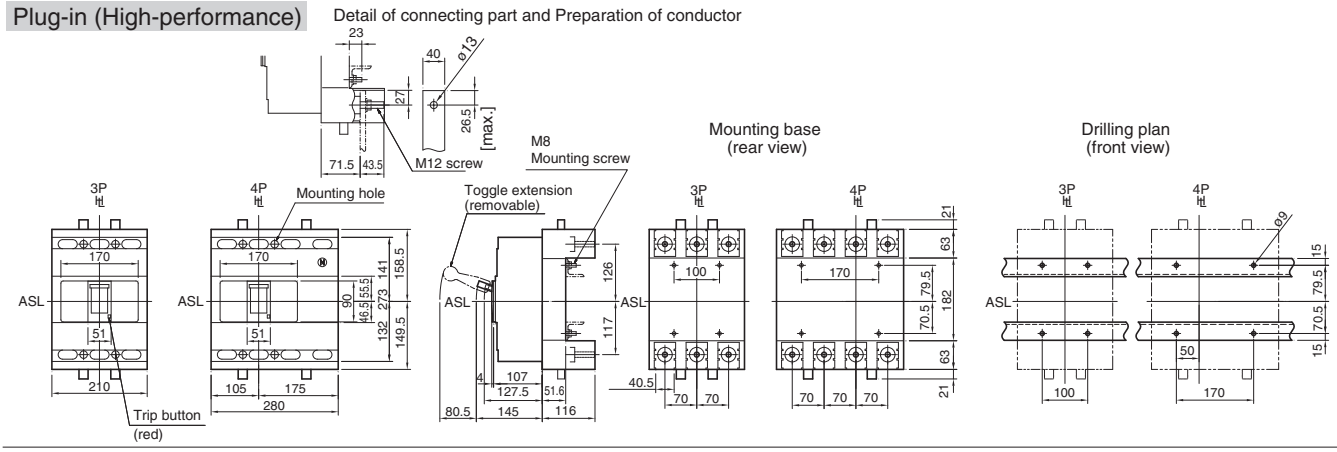

Flush-mounted

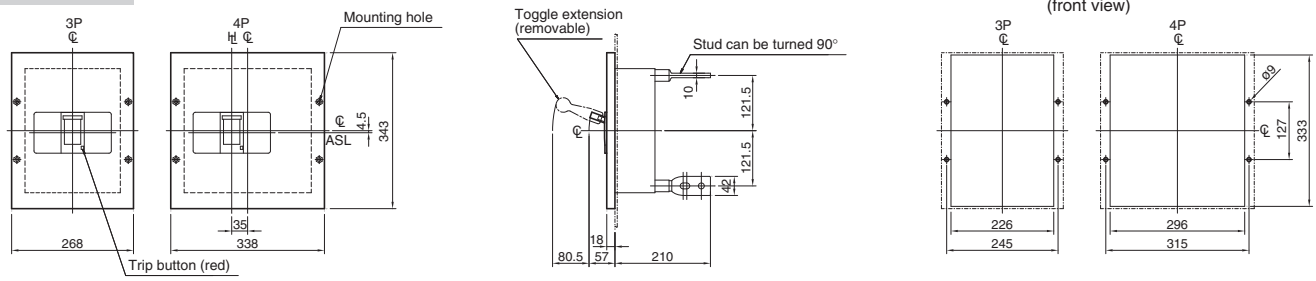

Note: Studs are factory installed in horizontal direction both on the line and load sides.

7 Characteristics and Outline Dimensions *TemBreak2*

Molded Case Circuit Breakers (1250A Frame)

S1250-NN

Ratings and Specifications

Type			S1250-NN				
Number of poles			3	4			
■Ratings							
Rated current, A			1250				
Rated insulation voltage 〔U_i〕 V			690				
Rated operational voltage V		AC	690				
		DC	250				
Rated short circuit making capacity, kA peak			32				
Rated short time withstand current, kA			15 (0.3sec)				
Rated impulse withstand voltage 〔U_{imp}〕 kV			8				
■Performance							
Utilization category	AC	690V	AC-23A				
IEC 60947-3	DC	250V	DC-22A				
Upstream breaker ㉙			S1250-NE				
Weight (◉ marked standard type) kg			18.2	23.4			
■Connections and Mountings							
Front-connected (FC)	Terminal screws		—				
	With extension bars		◉				
Rear-connected (RC)	Bolt studs		—				
	Flat bar studs		○				
Plug-in (PM) For switchboards	Standard (PMC)		○				
	High-performance (PMB)		—				
For distribution boards (PMC)			—				
Flush-mounted (FP) With flat bar studs			○				
Draw-out type (DR)			▲				
TemPlug70 (PG)			—				
TemPlug45B (PG4)			—				
DIN rail mount			—				
Clip-in chassis mount			—				
■Accessories (optional)		**Symbol**					
Externally mounted: Motor operator		M C	●				
External operating handle	Breaker-mounted	H B	●				
	Door-mounted (variable depth)	H P	●				
Toggle extension		H A	● ㉔				
Mechanical interlock⑨ Slide type		M S	●				
Toggle holder		H H	●				
Toggle lock		H L					
Terminal cover	For front-connected	C F	●				
	For rear-connected and plug-in	C R	—				
Interpole barrier		B A	● ③				
Terminal block for lead		T F	●				
Door flange		D F	●				
■Standard specifications							
Trip button (color)			Yes (Red)				
Handle position indication (ON: Red, OFF: Green)			Yes				
Suitability for isolation			Yes				
CE marking			Yes				

Notes:

◉ : Standard. This configuration used unless otherwise specified.
○ : Optional standard. Specify when ordering.
▲ : Semi-standard.
● : "yes" or "available".
— : "no" or "not available".
③ : Line side interpole barriers are supplied as standard. (Front connection only)
⑨ : The mechanical interlock is not applicable to the draw-out type (DR).
㉔ : One is supplied with every five breakers. Please specify if more are required.
㉙ : Required for overcurrent protection. Rated conditional short-circuit current [I_{cc}] will be the same as Rated short-circuit breaking capacity of upstream breaker.

Combinations of Internally Mounted Accessories (Optional)

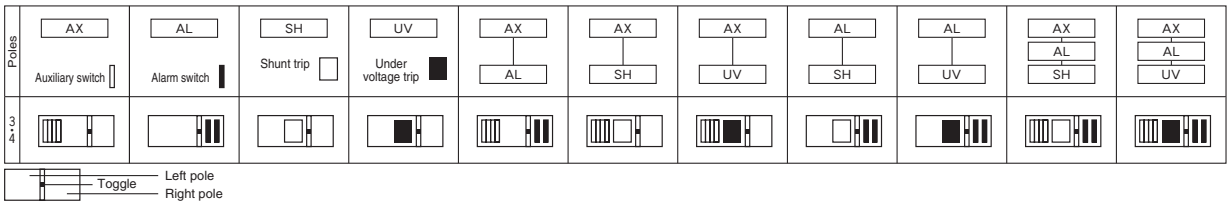

Outline dimensions (mm) S1250-NN

Front-connected

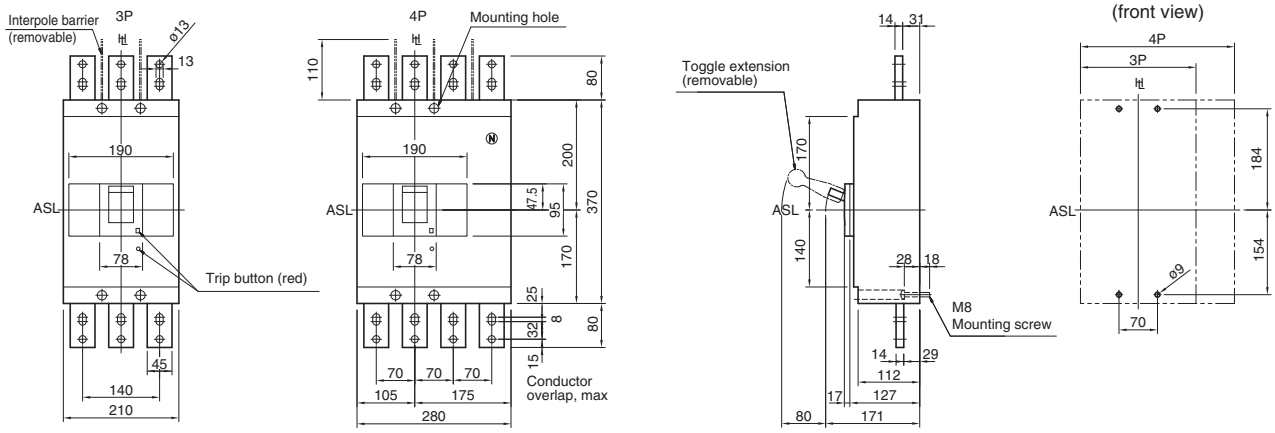

Rear-connected

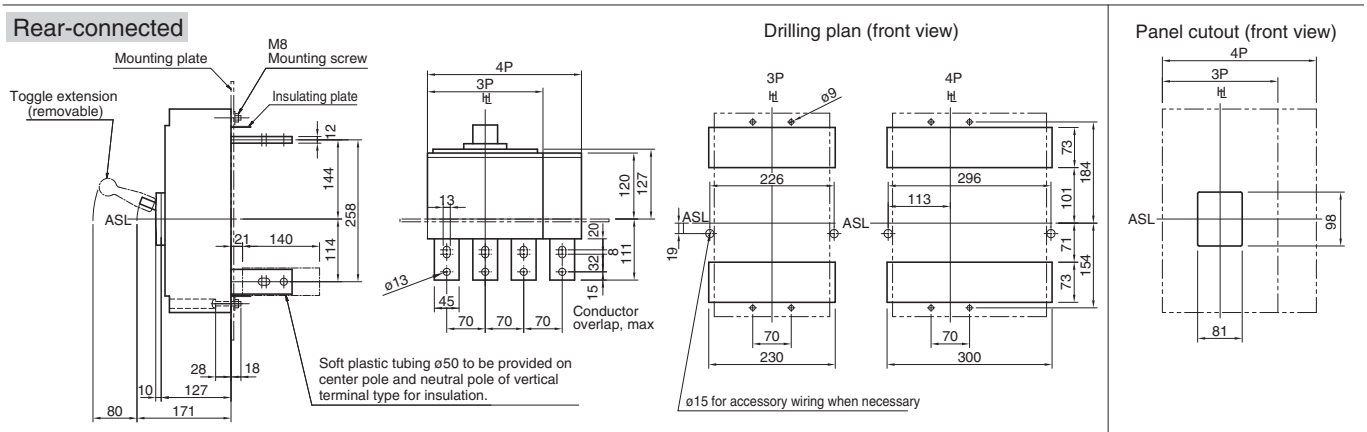

Note: Studs are factory installed in horizontal direction both on the line and load sides.

Panel cutout dimensions shown give an allowance of 1.5mm around the handle escutcheon.

Plug-in (Standard)

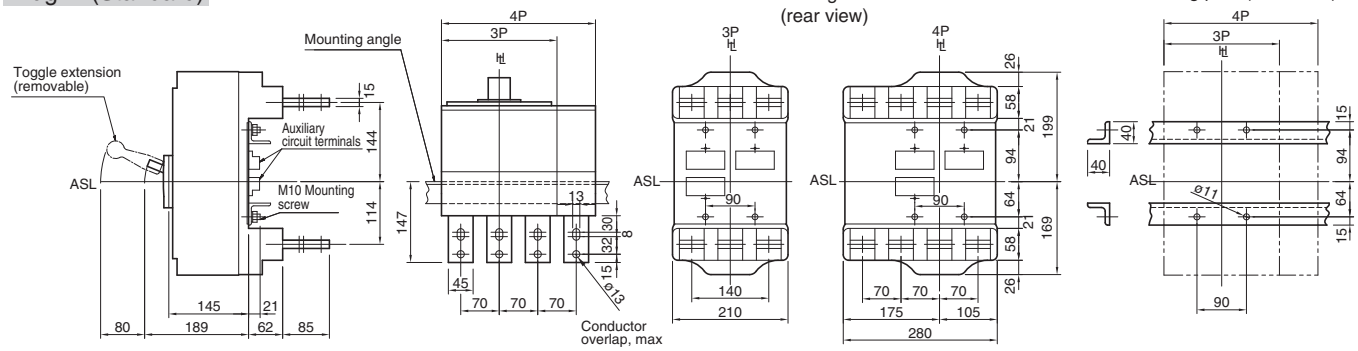

Flush-mounted

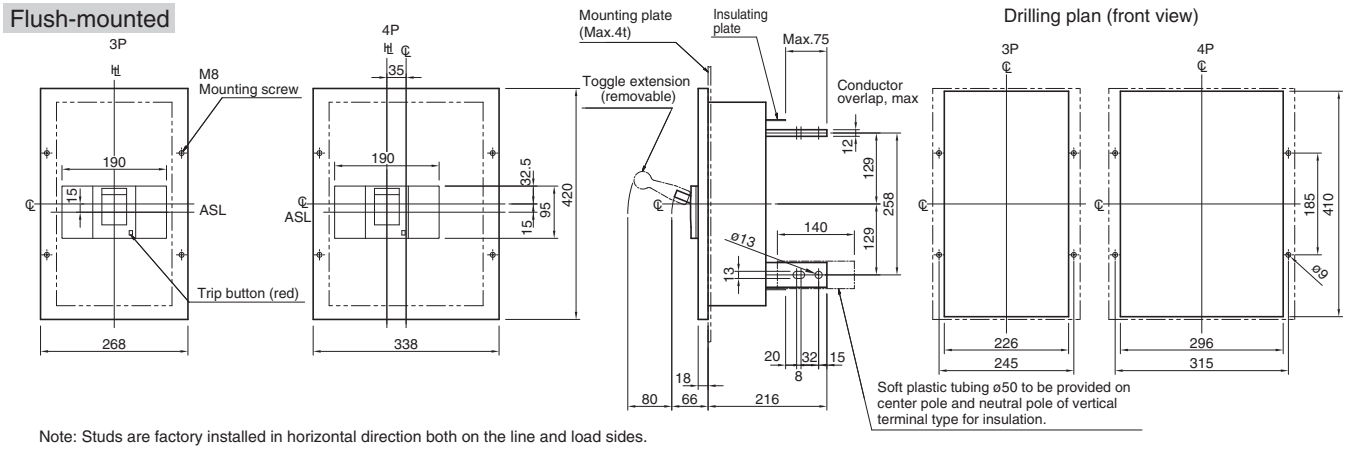

Note: Studs are factory installed in horizontal direction both on the line and load sides.

7 Characteristics and Outline Dimensions *TemBreak2*

Molded Case Circuit Breakers (1600A Frame)

S1600-NN

Ratings and Specifications

Type			S1600-NN				
Number of poles			3	4			
■Ratings							
Rated current, A			1600				
Rated insulation voltage 〔U_i〕 V			690				
Rated operational voltage V		AC	690				
		DC	250				
Rated short circuit making capacity, kA peak			45				
Rated short time withstand current, kA			20 (0.3sec)				
Rated impulse withstand voltage 〔U_{imp}〕 kV			8				
■Performance							
Utilization category	AC	690V	AC-23A				
IEC 60947-3	DC	250V	DC-22A				
Upstream breaker ㉙			S1600-NE				
Weight (◉ marked standard type) kg			24.9	32.9			
■Connections and Mountings							
Front-connected (FC)	Terminal screws		—				
	With extension bars		○				
Rear-connected (RC)	Bolt studs		—				
	Flat bar studs		◉				
Plug-in (PM)	For switchboards	Standard (PMC)	—				
		High-performance (PMB)	—				
	For distribution boards (PMC)		—				
Flush-mounted (FP)	With flat bar studs		○				
Draw-out type (DR)			○				
TemPlug70 (PG)			—				
TemPlug45B (PG4)			—				
DIN rail mount			—				
Clip-in chassis mount			—				
■Accessories (optional)		**Symbol**					
Externally mounted: Motor operator		M C	●				
External operating handle	Breaker-mounted	H B	●				
	Door-mounted (variable depth)	H P	●				
Toggle extension		H A	● ㉔				
Mechanical interlock⑨	Slide type	M S	●				
Toggle holder		H H	●				
Toggle lock		H L					
Terminal cover	For front-connected	C F	—				
	For rear-connected and plug-in	C R	—				
Interpole barrier		B A	● ③				
Terminal block for lead		T F	●				
Door flange		D F	●				
■Standard specifications							
Trip button (color)			Yes (Red)				
Handle position indication (ON: Red, OFF: Green)			Yes				
Suitability for isolation			Yes				
CE marking			Yes				

Notes:

◉ : Standard. This configuration used unless otherwise specified.
○ : Optional standard. Specify when ordering.
● : "yes" or "available".
— : "no" or "not available".
③ : Line side interpole barriers are supplied as standard. (Front connection only)
⑨ : The mechanical interlock is not applicable to the draw-out type (DR).
㉔ : One is supplied with every five breakers. Please specify if more are required.
㉙ : Required for overcurrent protection. Rated conditional short-circuit current [I_{cc}] will be the same as Rated short-circuit breaking capacity of upstream breaker.

Combinations of Internally Mounted Accessories (Optional)

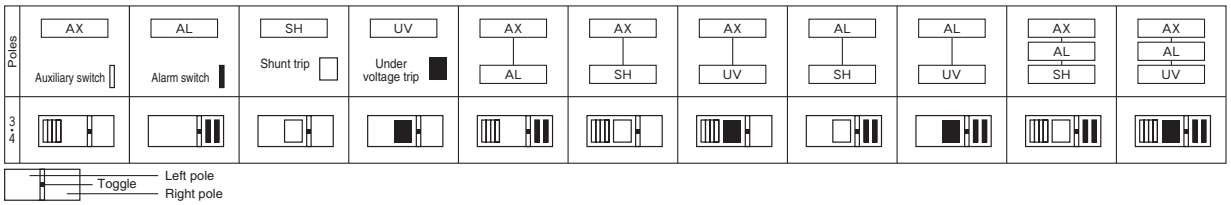

Outline dimensions (mm) S1600-NN

Front-connected

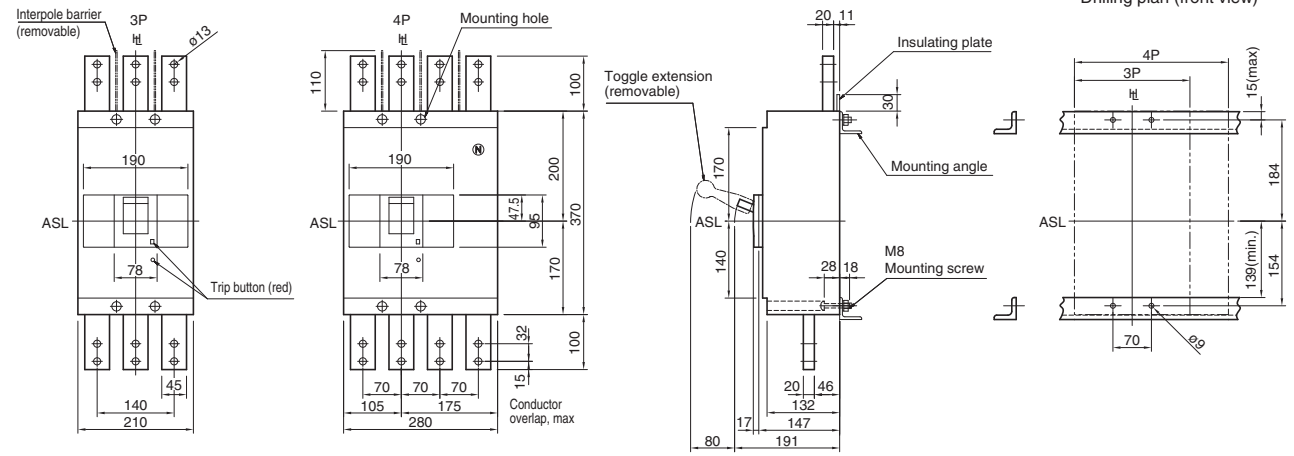

Rear-connected

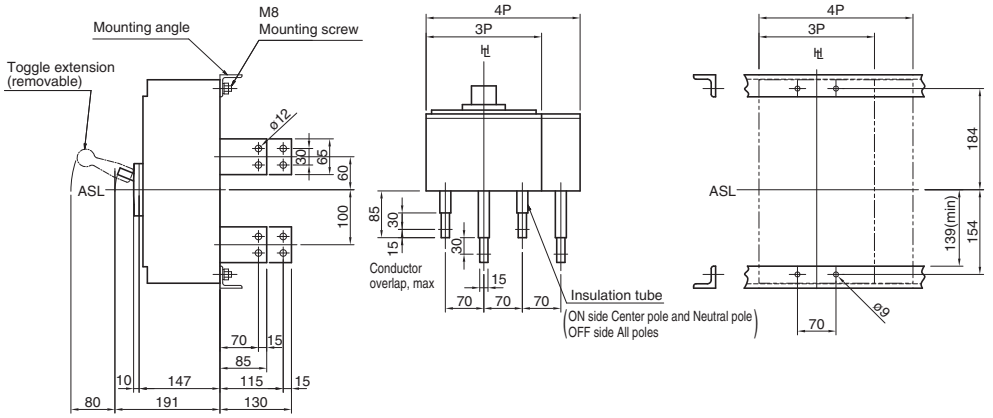

Panel cutout (front view)

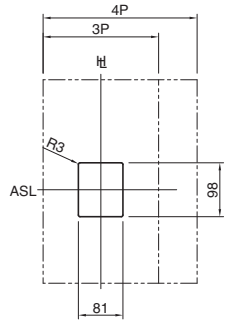

Panel cutout dimensions shown give an allowance of 1.5mm around the handle escutcheon.

Draw-out

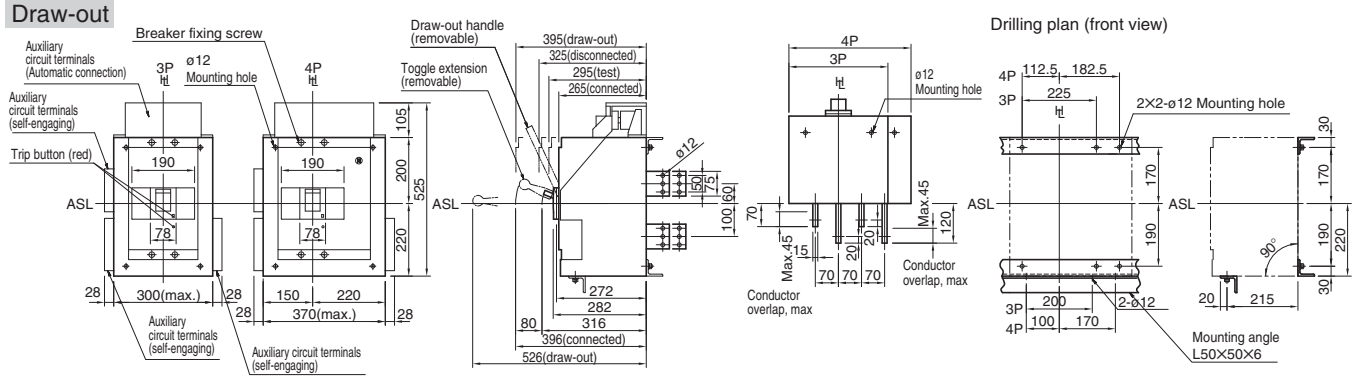

Flush-mounted

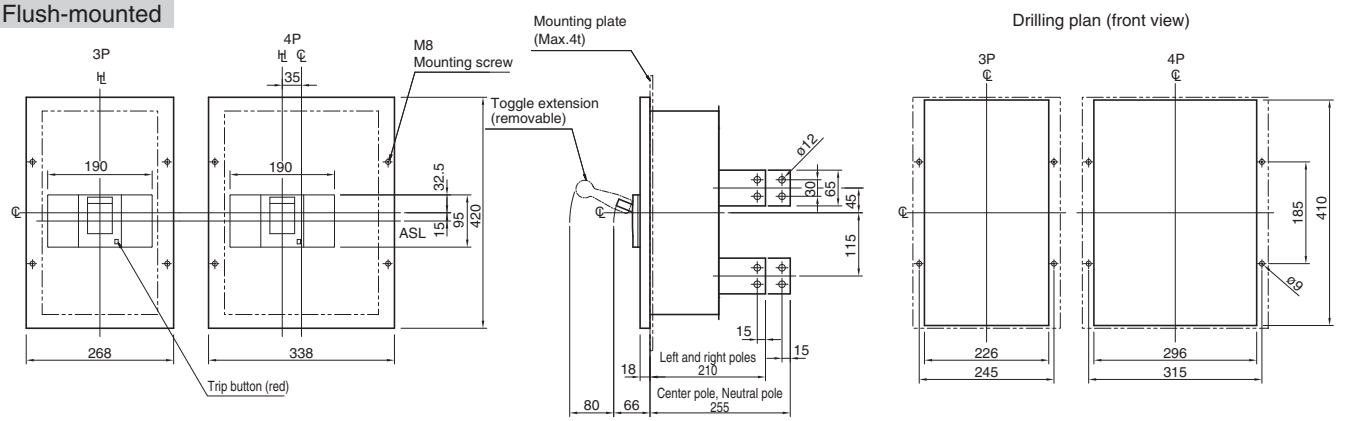

7 Characteristics and Outline Dimensions TemBreak

Molded Case Circuit Breakers Electronic (1000A・1200A Frame)

TL-1000NE, TL-1200NE

Ratings and Specifications

Type			TL-1000NE		TL-1200NE	
Number of poles			3	4	3	4
■Ratings						
Rated current, A			(Adjustable)		(Adjustable)	
Calibrated at 45°C			500	800	600	1000
			600	900	700	1200
			700	1000	800	
Rated insulation voltage〔U_i〕 V			690		690	
Rated impulse withstand voltage〔U_{imp}〕 kV			8		8	
■Rated breaking capacity, kA						
NK	AC	690V	—		—	
I_{cu}/I_{cs}(sym)		450V	125/—㉓		125/— ㉓	
		240V	—		—	
	DC	250V	—		—	
IEC60947-2	AC	690V	45/34		45/34	
I_{cu}/I_{cs}(sym)		500V	75/57		75/57	
		440V	125/65		125/65	
		415V	125/65		125/65	
		380V	125/65		125/65	
		240V	150/113		150/113	
	DC	250V	—		—	
		125V	—		—	
■Rated short time withstand current, kA			15 (0.3sec)		15 (0.3sec)	
Weight (◉ marked standard type) kg			26.0	33.7	26.0	33.7
■Connections and Mountings						
Front-connected (FC)	Terminal screws		—		—	
	With extension bars		◉		◉	
Rear-connected (RC)	Bolt studs		—		—	
	Flat bar studs		○		○	
Plug-in (PM)	For switchboards	Standard (PMC)	○		○	
		High-performance (PMB)	—		—	
	For distribution boards (PMC)		—		—	
Flush-mounted (FP)	With flat bar studs		○		○	
Draw-out type (DR)			▲		▲	
TemPlug70 (PG)			—		—	
TemPlug45B (PG4)			—		—	
DIN rail mount			—		—	
Clip-in chassis mount			—		—	
■Accessories (optional)		**Symbol**				
Externally mounted: Motor operator		M C	●		●	
External operating handle	Breaker-mounted	H B	●		●	
	Door-mounted (variable depth)	H P	●		●	
Toggle extension		H A	● ㉔		● ㉔	
Mechanical interlock⑨ Slide type		M S	●		●	
Toggle holder		H H	●		●	
Toggle lock		H L				
Terminal cover	For front-connected	C F	—		—	
	For rear-connected and plug-in	C R	—		—	
Interpole barrier		B A	● ③		● ③	
Terminal block for lead		T F	●		●	
Door flange		D F	●		●	
■Standard specifications						
Overcurrent trip mechanism			Electronic ⑯		Electronic ⑯	
Trip button (color)			Yes (Brown)		Yes (Brown)	
Handle position indication (ON: Red, OFF: Green)			Yes		Yes	
Suitability for isolation			Non		Non	
CE marking			Non		Non	

Notes:
◉ : Standard. This configuration used unless otherwise specified. ○ : Optional standard. Specify when ordering. ▲ : Semi-standard. ● : "yes" or "available". — : "no" or "not available". ③ : Line side interpole barriers are supplied as standard. (Front connection only) ⑨ : The mechanical interlock is not applicable to the draw-out type (DR). ⑯ : Optional pretrip alarm or ground fault trip function available on request.
㉓ : at 460V AC. ㉔ : One is supplied with every five breakers. Please specify if more are required.
㊹ : Ground fault trip can not be equipped with Pre-trip alarm.

Time/Current characteristic curves

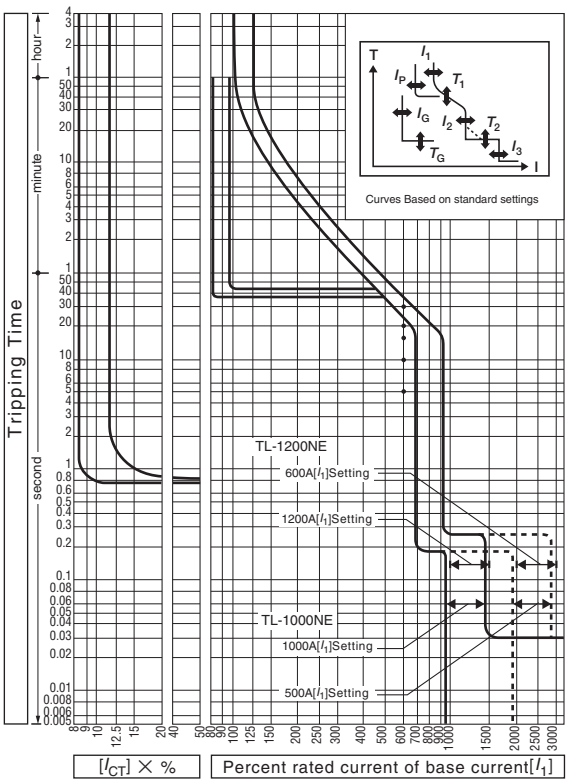

Overcurrent tripping characteristics

Type	TL-1000NE	TL-1200NE
CT rated current (A) (I_{CT})	1000	1250
Long time-delay pick-up current (A) (I_1)	500, 600, 700, 800, 900, 1000	600, 700, 800, 1000, 1200
Long time-delay time settings (S) (T_1)	(5–10–15–20–30) at (I_1) x 600% current Setting tolerance ±20%	
Short time-delay pick-up current (A) (I_2)	(I_1) x 200, 400, 600, 800, 1000% Setting tolerance ± 15%	
Short time-delay time settings (S) (T_2)	Opening time (0.1, 0.15, 0.2, 0.25, 0.3) in the definite time-delay. Total clearing time is +50ms and resettable time –20ms for the time-delay settings	
Instantaneous trip pick-up current (A) (I_3)	Continuously adjustable from (I_{CT}) x 300 ~ 1200%. Setting tolerance ±20%	
Pre-trip alarm pick-up current (A) (I_P) (optional)	(I_1) x 70, 80, 90, 100% Setting tolerance ±10%	
Pre-trip alarm time setting (S) (T_P) (optional)	40 fixed definite time-delay. Setting tolerance ±10%	
Ground fault trip pick-up current (A) (I_G) (optional) ㊹	Continuously adjustable from (I_{CT}) x 10 ~ 40% Setting tolerance ±15%	
Ground fault trip-time setting (S) (T_G) (optional) ㊹	Opening time (0.1, 0.2, 0.3, 0.4, 0.8) in the definite time- delay. Total clearing time is +50ms and resettable time –20ms for the time-delay settings	

NOTE: The underlined values will be applied as standard ratings unless otherwise specified when ordering

Combinations of Internally Mounted Accessories (Optional)

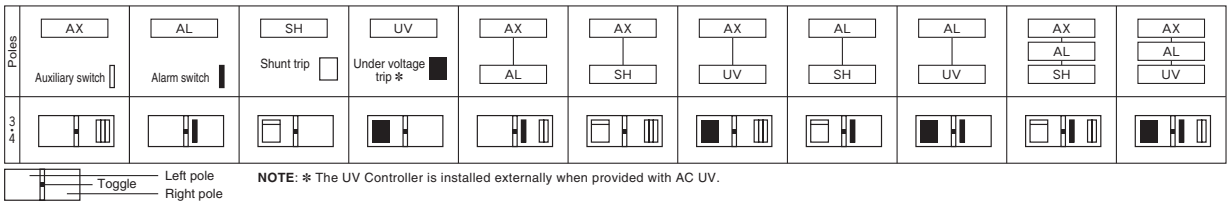

NOTE: ✻ The UV Controller is installed externally when provided with AC UV.

Outline dimensions (mm) — TL-1000NE, TL-1200NE

Front-connected

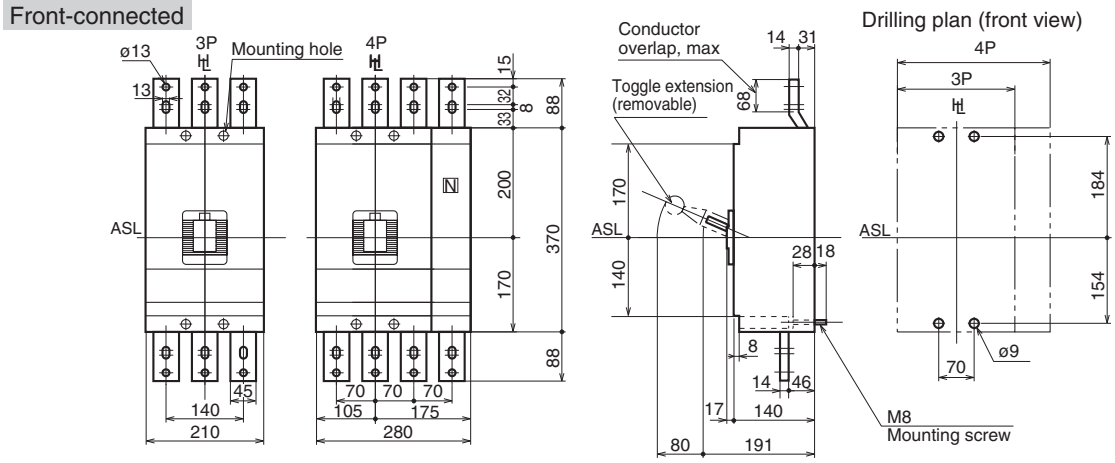

Rear-connected

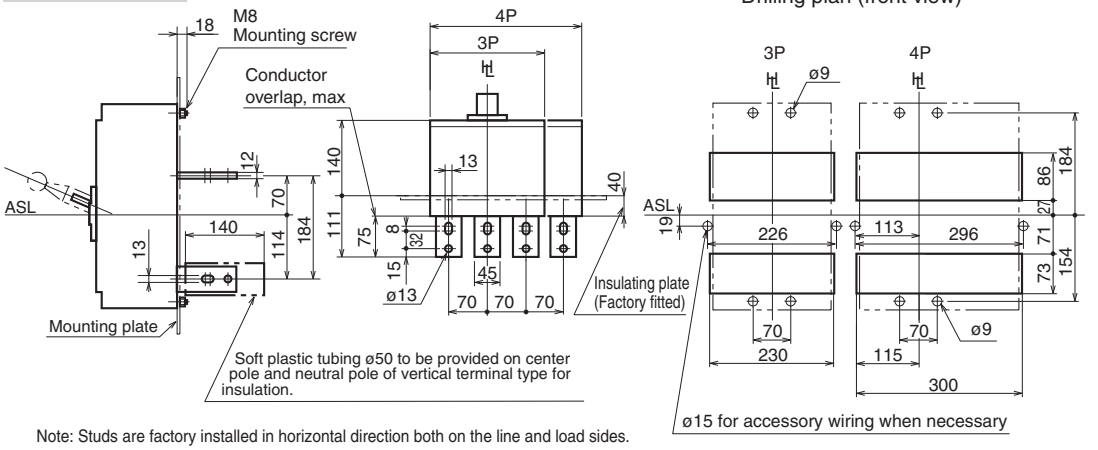

Note: Studs are factory installed in horizontal direction both on the line and load sides.

Panel cutout (front view)

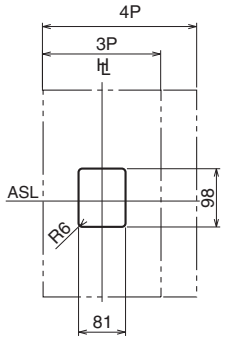

Panel cutout dimensions shown give an allowance of 1.5mm around the handle escutcheon.

Plug-in (Standard)

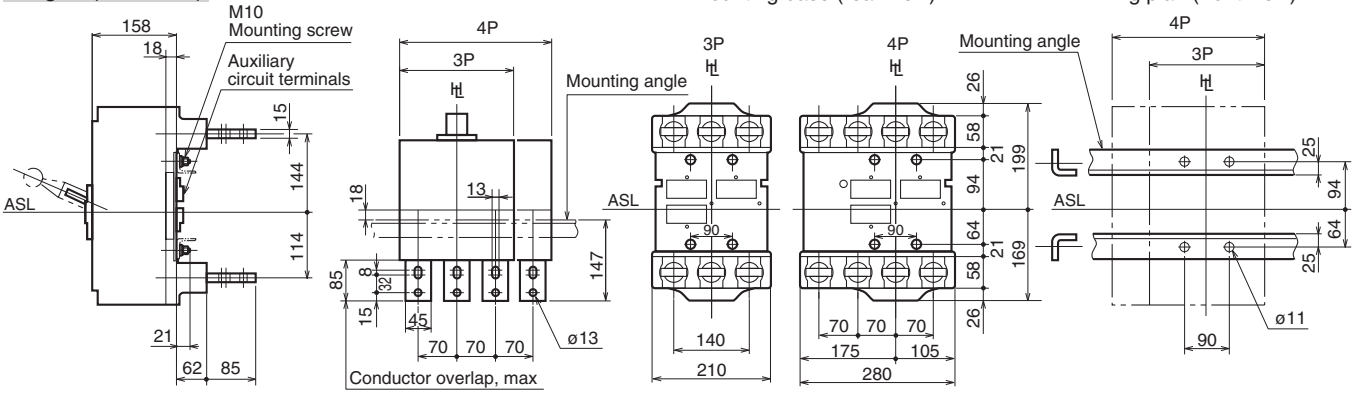

Flush-mounted

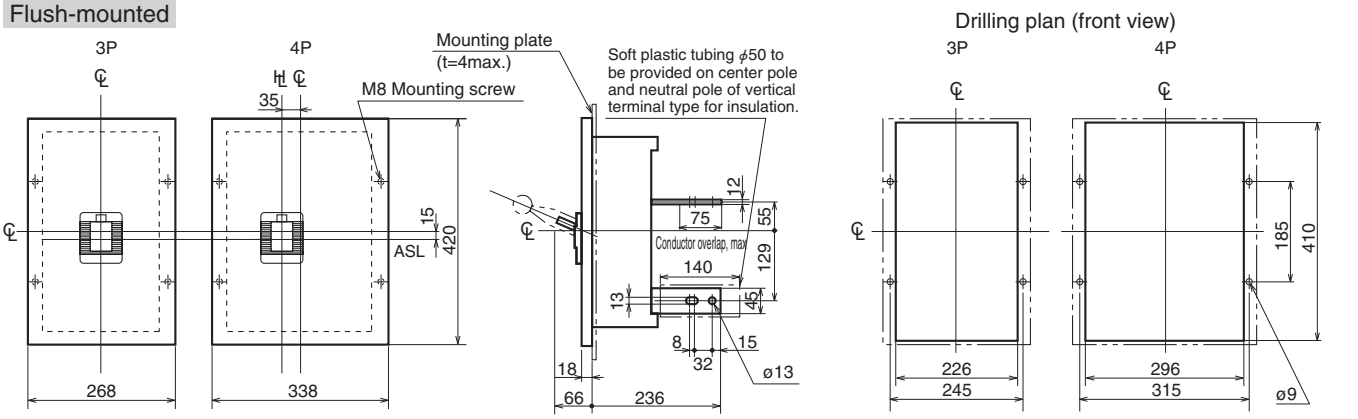

Note: Studs are factory installed in horizontal direction both on the line and load sides.

7 Characteristics and Outline Dimensions TemBreak

Molded Case Circuit Breakers Electronic (2000A Frame)

XS2000NE

Ratings and Specifications

Type			XS2000NE	
Number of poles			3	4
■Ratings				
Rated current, A			(Adjustable)	
Calibrated at 45°C			1000	1600
			1200	1800
			1400	2000
Rated insulation voltage〔U_i〕 V			690	
Rated impulse withstand voltage〔U_{imp}〕 kV			8	
■Rated breaking capacity, kA				
NK	AC	690V	—	
I_{cu}/I_{cs}(sym)		450V	85/— ⑬	
		240V	—	
	DC	250V	—	
IEC60947-2	AC	690V	45/42	
I_{cu}/I_{cs}(sym)		500V	65/50	
		440V	85/65	
		415V	85/65	
		380V	100/75	
		240V	125/94	
	DC	250V	—	
		125V	—	
■Rated short time withstand current, kA			42 (0.3sec)	
Weight (◉ marked standard type) kg			54.0	67.0
■Connections and Mountings				
Front-connected (FC)	Terminal screws		—	
	With extension bars		○	
Rear-connected (RC)	Bolt studs		—	
	Flat bar studs		◉	
Plug-in (PM)	For switchboards	Standard (PMC)	—	
		High-performance (PMB)	—	
	For distribution boards (PMC)		—	
Flush-mounted (FP)	With flat bar studs		○	
Draw-out type (DR)			○	
TemPlug70 (PG)			—	
TemPlug45B (PG4)			—	
DIN rail mount			—	
Clip-in chassis mount			—	
■Accessories (optional)		**Symbol**		
Externally mounted: Motor operator		M C	●	
External operating handle	Breaker-mounted	H B	—	
	Door-mounted (variable depth)	H P	—	
Toggle extension		H A	● ②	
Mechanical interlock⑨ Slide type		M S	●	
Toggle holder		H H	●	
Toggle lock		H L		
Terminal cover	For front-connected	C F	—	
	For rear-connected and plug-in	C R	—	
Interpole barrier		B A	—	
Terminal block for lead		T F	●	
Door flange		D F	●	
■Standard specifications				
Overcurrent trip mechanism			Electronic ⑯	
Trip button (color)			Yes (Red)	
Handle position indication (ON: Red, OFF: Green)			Yes	
Suitability for isolation			Non	
CE marking			Non	

Notes:
◉ : Standard. This configuration used unless otherwise specified. ○ : Optional standard. Specify when ordering. ● : "yes" or "available". — : "no" or "not available". ② : Supplied as standard.
⑨ : The mechanical interlock is not applicable to the draw-out type (DR). ⑬ : at 500V AC.
⑯ : Optional pretrip alarm or ground fault trip function available on request.
⑥④ : Ground fault trip can not be equipped with Pre-trip alarm.

Time/Current characteristic curves

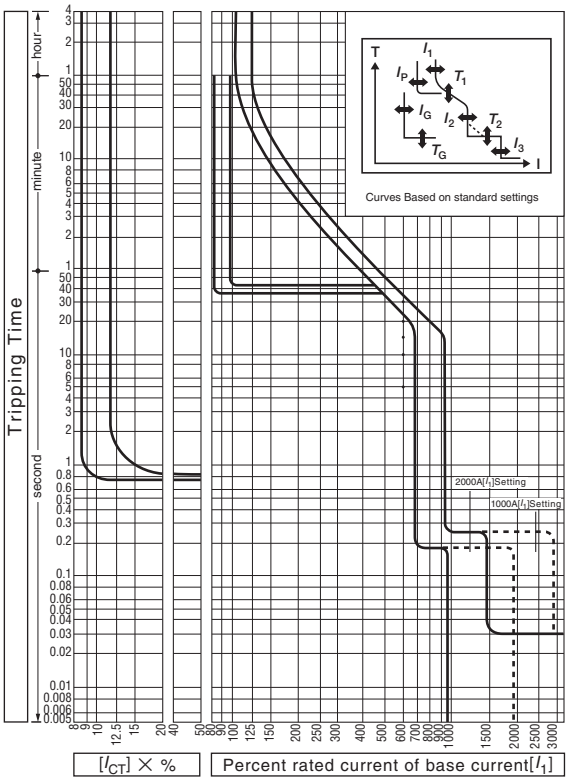

Overcurrent tripping characteristics

CT rated current (A) (I_{CT})	2000
Long time-delay pick-up current (A) (I_1)	1000, 1200, 1400, 1600, 1800, 2000
Long time-delay time settings (S) (T_1)	(5–10–15–20–30) at (I_1) x 600% current Setting tolerance ±20%
Short time-delay pick-up current (A) (I_2)	(I_1) x 200, 400, 600, 800, 1000% Setting tolerance ± 15%
Short time-delay time settings (S) (T_2)	Opening time (0.1, 0.15, 0.2, 0.25, 0.3) in the definite time-delay. Total clearing time is +50ms and resettable time –20ms for the time-delay settings
Instantaneous trip pick-up current (A) (I_3)	Continuously adjustable from (I_{CT}) x 300 ~ 1200%. Setting tolerance ±20%
Pre-trip alarm pick-up current (A) (I_P) (optional)	(I_1) x 70, 80, 90, 100% Setting tolerance ±10%
Pre-trip alarm time setting (S) (T_P) (optional)	40 fixed definite time-delay. Setting tolerance ±10%
Ground fault trip pick-up current (A) (I_G) (optional) ⑥④	Continuously adjustable from (I_{CT}) x 10 ~ 40% Setting tolerance ±15%
Ground fault trip-time setting (S) (T_G) (optional) ⑥④	Opening time (0.1, 0.2, 0.3, 0.4, 0.8) in the definite time- delay. Total clearing time is +50ms and resettable time –20ms for the time-delay settings

NOTE: The underlined values will be applied as standard ratings unless otherwise specified when ordering

Combinations of Internally Mounted Accessories (Optional)

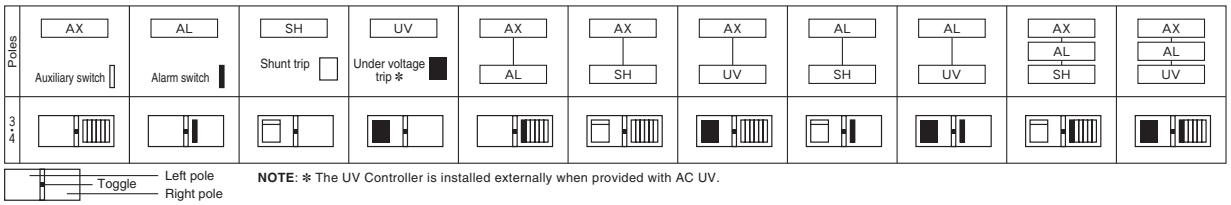

NOTE: ✻ The UV Controller is installed externally when provided with AC UV.

Outline dimensions (mm) XS2000NE

Front-connected

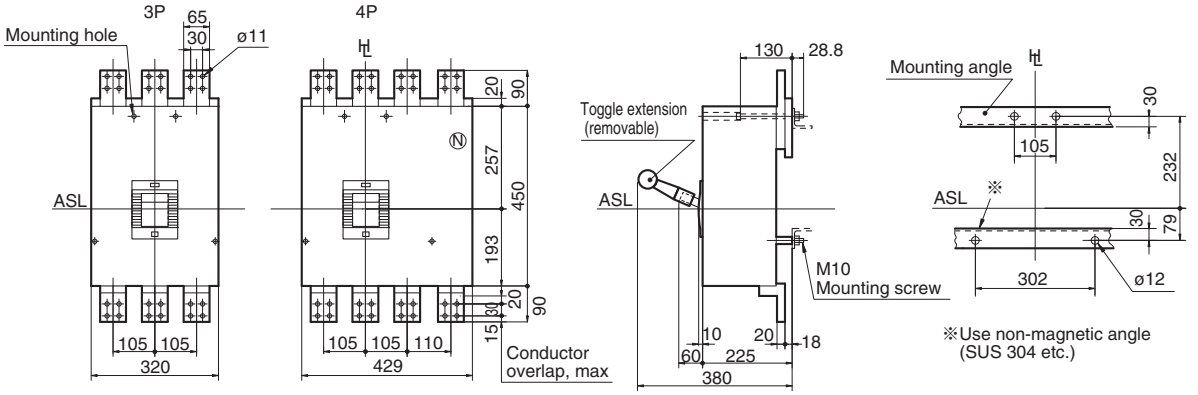

Rear-connected

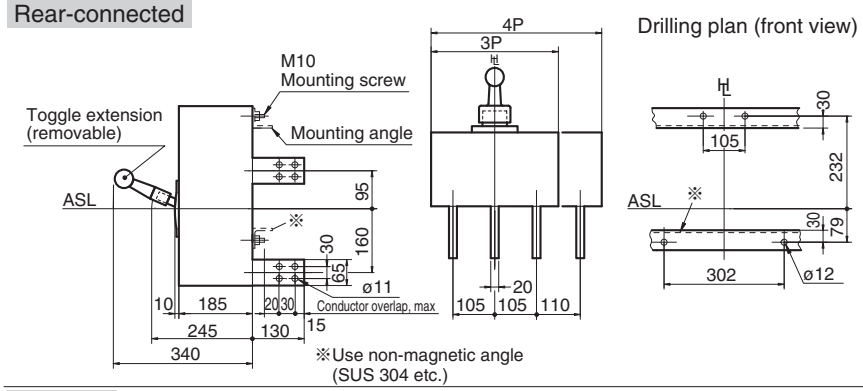

Panel cutout (front view)

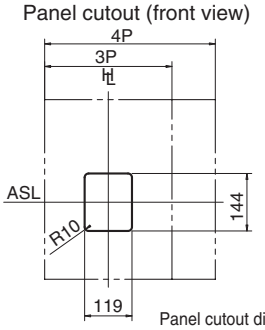

Panel cutout dimensions shown give an allowance of 2mm around the handle escutcheon.

Draw-out

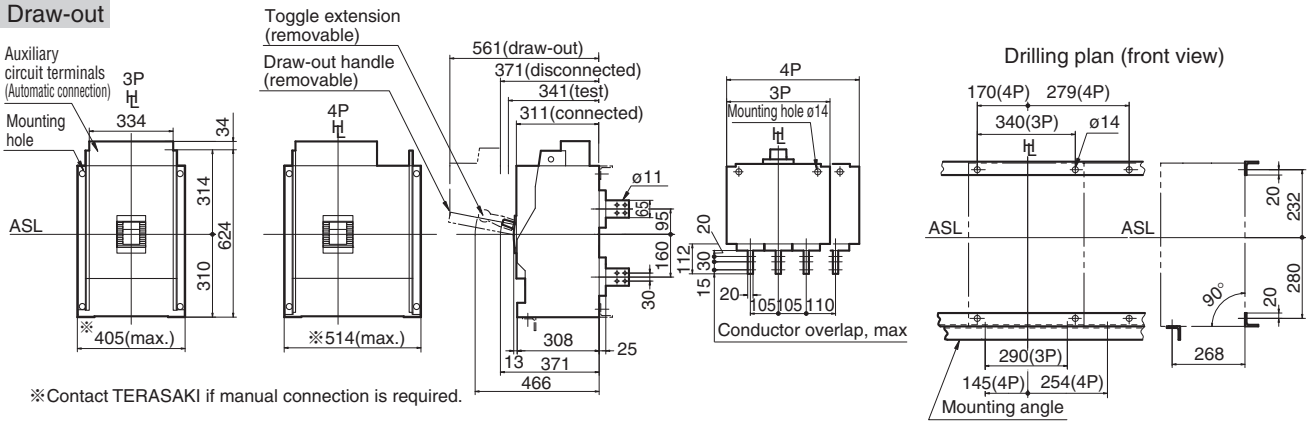

※Contact TERASAKI if manual connection is required.

Flush-mounted

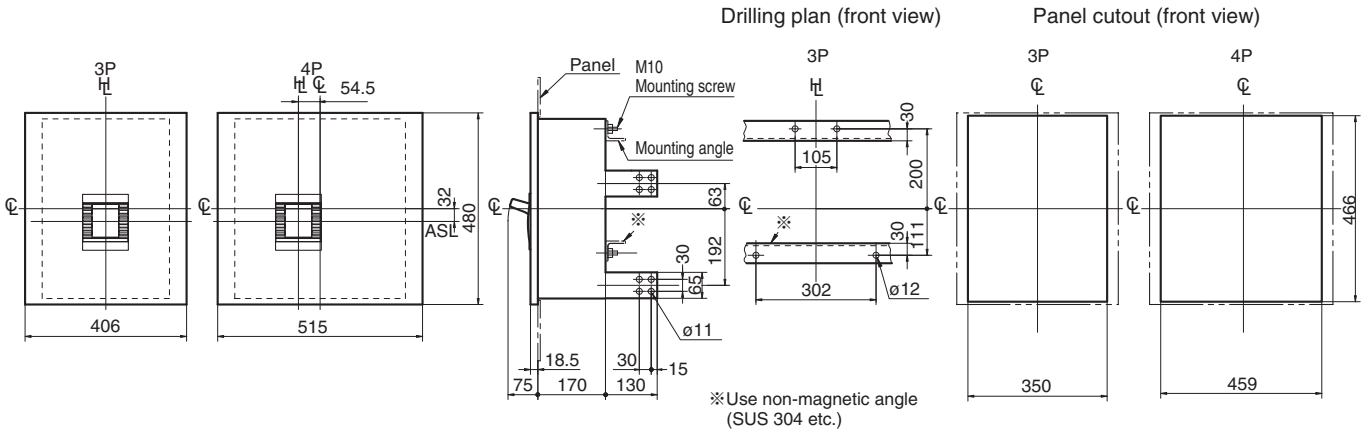

7 Characteristics and Outline Dimensions TemBreak

Molded Case Circuit Breakers (2000A Frame)

XS2000NN

Ratings and Specifications

Type			XS2000NN				
Number of poles			3	4			
■Ratings							
Rated current, A			2000				
Rated insulation voltage 〔U_i〕 V			690				
Rated operational voltage V		AC	690				
		DC	250				
Rated short circuit making capacity, kA peak			90				
Rated short time withstand current, kA			35 (0.3sec)				
Rated impulse withstand voltage 〔U_{imp}〕 kV			8				
■Performance							
Max switching current A		AC	12000				
IEC 60947-2 Ann.L CBI-Y		DC	5000				
Endurance	Number of operating cycles with current		500				
	Number of operating cycles without current		2500				
Upstream breaker (OCPD) ㉙			XS2000NE				
Weight (◉ marked standard type) kg			51.8	64.8			
■Connections and Mountings							
Front-connected (FC)	Terminal screws		—				
	With extension bars		○				
Rear-connected (RC)	Bolt studs		—				
	Flat bar studs		◉				
Plug-in (PM) For switchboards	Standard (PMC)		—				
	High-performance (PMB)		—				
For distribution boards (PMC)			—				
Flush-mounted (FP) With bolt studs			○				
Draw-out type (DR)			○				
TemPlug70 (PG)			—				
TemPlug45B (PG4)			—				
DIN rail mount			—				
Clip-in chassis mount			—				
■Accessories (optional)		**Symbol**					
Externally mounted: Motor operator		M C	●				
External operating handle	Breaker-mounted	H B	—				
	Door-mounted (variable depth)	H P	● ⑥③				
Toggle extension		H A	● ②				
Mechanical interlock⑨ Slide type		M S	●				
Toggle holder		H H	●				
Toggle lock		H L					
Terminal cover	For front-connected	C F	—				
	For rear-connected and plug-in	C R	—				
Interpole barrier		B A	—				
Terminal block for lead		T F	●				
Door flange		D F	●				
■Standard specifications							
Trip button (color)			Yes (Red)				
Handle position indication (ON: Red, OFF: Green)			Yes				
Suitability for isolation			Non				
CE marking			Non				

Notes:

◉ : Standard. This configuration used unless otherwise specified.
○ : Optional standard. Specify when ordering.
● : "yes" or "available".
— : "no" or "not available".
② : Supplied as standard.
⑨ : The mechanical interlock is not applicable to the draw-out type (DR).
㉙ : Required for overcurrent protection. Rated conditional short-circuit current [I_{cc}] will be the same as Rated short-circuit breaking capacity of upstream breaker.
⑥③ : Fixed depth, not adjustable.

Combinations of Internally Mounted Accessories (Optional)

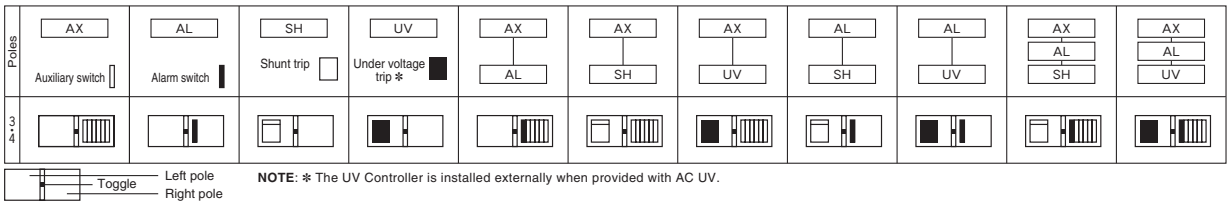

NOTE: ✻ The UV Controller is installed externally when provided with AC UV.

Outline dimensions (mm) XS2000NN

Front-connected

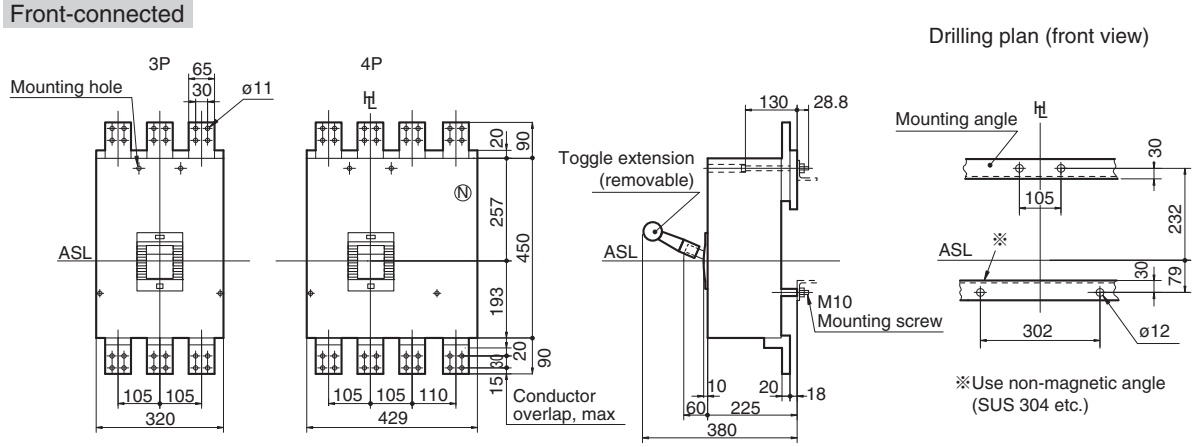

Rear-connected

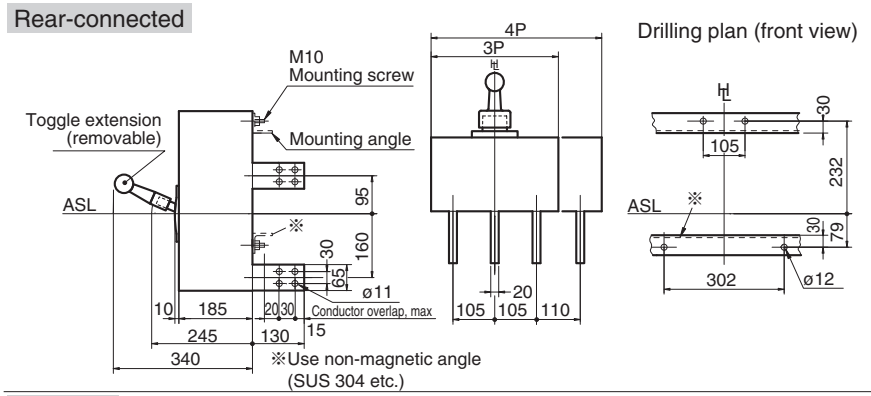

Panel cutout (front view)

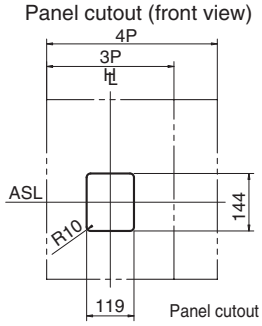

Panel cutout dimensions shown give an allowance of 2mm around the handle escutcheon.

Draw-out

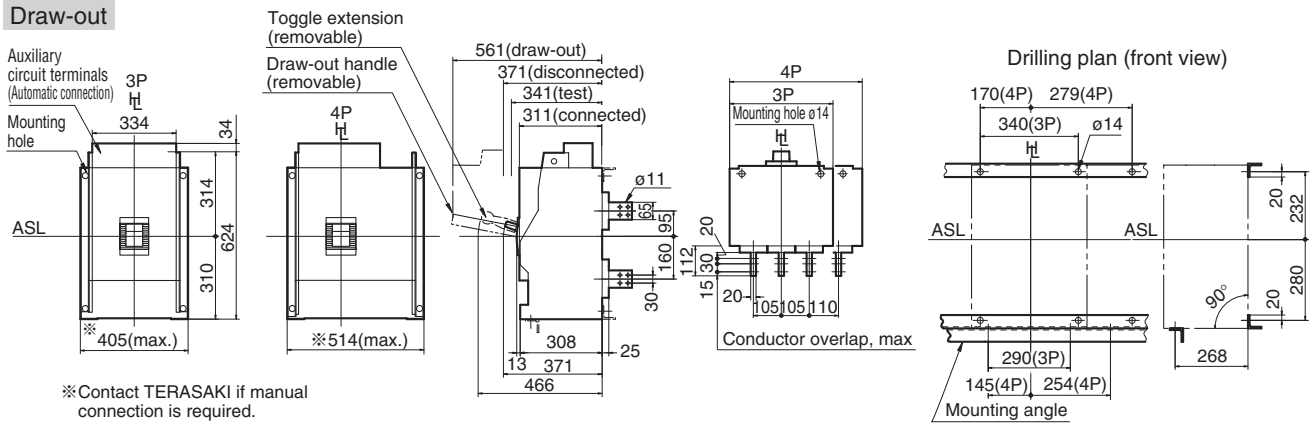

Flush-mounted

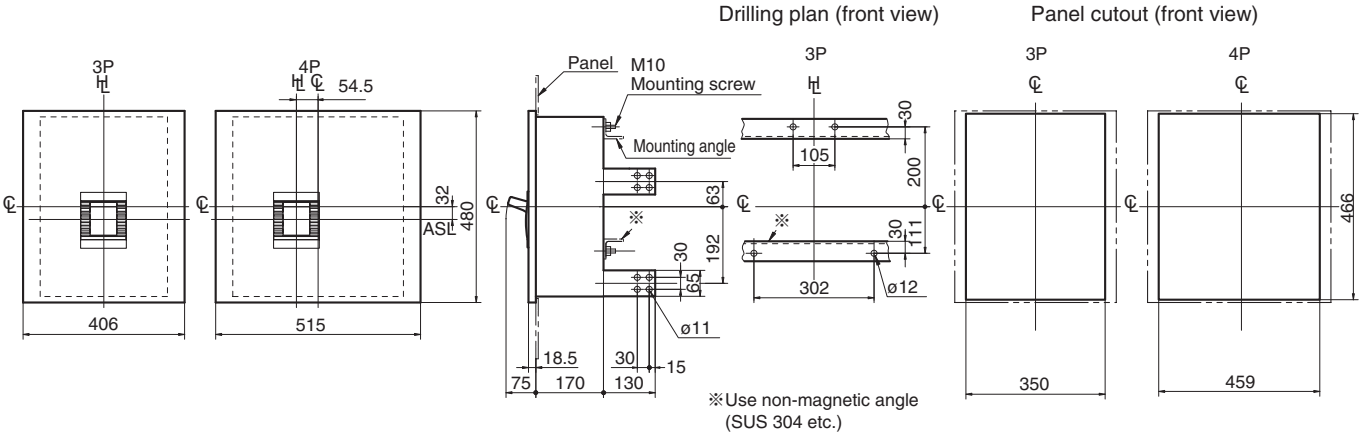

7 Characteristics and Outline Dimensions

Molded Case Circuit Breakers (50A Frame)

TB-5S

Ratings and Specifications

Type			TB-5S
Number of poles			2
■Ratings			
Rated current, A			10 30
Calibrated at 45°C			15 40
			20 50
Rated voltage V	AC		460
	DC		125
■Rated breaking capacity, kA			
NK	AC	250 V	5 ㊹
(sym)		125 V	42
	DC	125 V	5
Weight kg			0.34
■Connecting scheme			
Front-connected both on the line and load sides			●
Plug-in on the line side and front-connected on the load side			—
Plug-in both on the line and load sides			—
■Mounting scheme (optional)			
Clip-in chassis			●
Mounting base for single-row installation			—
Mounting base for branched-into-dual-rows installation			—
■Accessories (optional)			Symbol
Toggle holder			H H ●
Toggle lock			H L —
Toggle cap			H C —
Interpole barrier			B A ●
■Standard specifications			
Overcurrent trip mechanism			Thermal-magnetic
Trip button (color)			Non
Handle position indication (ON: Red, OFF: Green)			Non
Suitability for isolation			Non
CE marking			Non

Notes:
● : "yes" or "available".
— : "no" or "not available".
㊹ : 2.5kA for 10A.

Time/Current characteristic curves

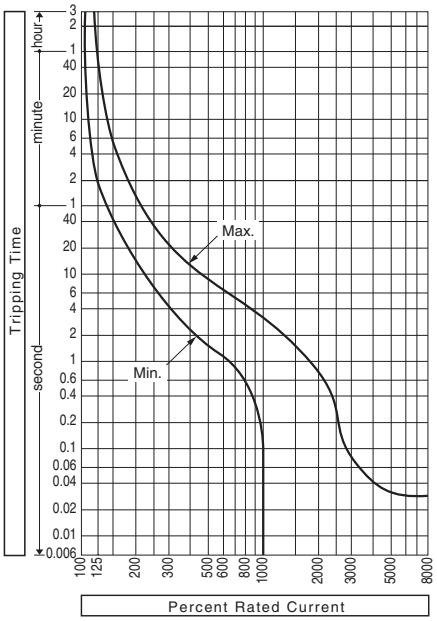

Ambient Compensating Curves

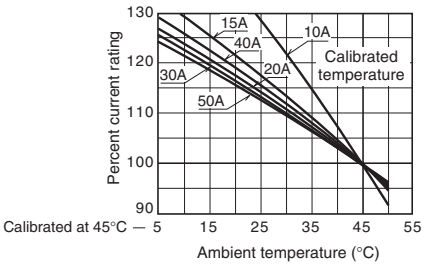

Outline dimensions (mm) TB-5S

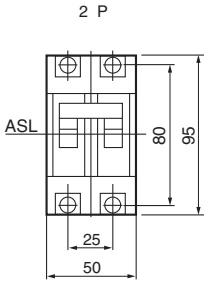

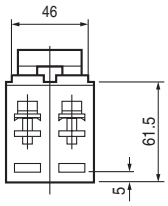

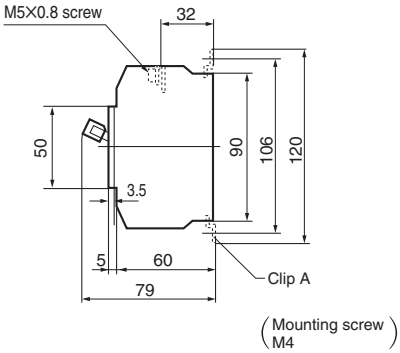

Preparation of conductor

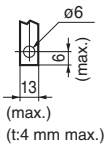

Clip and Clip-in chassis

Clip A

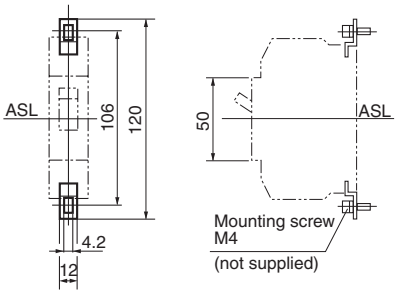

Clip-in Chassis, part number TDB-50SG
(12-pieces snap-off chassis)

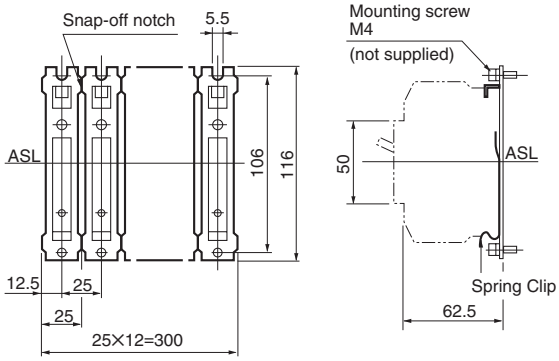

" NOTE: Clips A are supplied with breakers, 2 pieces/pole.
For multi-pole installation, clip-to-clip distance is 25 mm.

NOTE: 1. Clip-in chassis is notched between every two pieces to adjust number of pieces to number of breaker poles. (Bend once or twice to snap off.)

2. Screw clip-in chassis down at 4 or 5 pole intervals.

7 Characteristics and Outline Dimensions

Molded Case Circuit Breakers (50A Frame)

TB-5P

Ratings and Specifications

Type			TB-5P
Number of poles			2
■Ratings			
Rated current, A			10 30
Calibrated at 45°C			15 40
			20 50
Rated voltage V	AC		460
	DC		125
■Rated breaking capacity, kA			
NK	AC	250 V	5 ㊹
(sym)		125 V	42
	DC	125 V	5
Weight kg			0.28
■Connecting scheme			
Front-connected both on the line and load sides			—
Plug-in on the line side and front-connected on the load side			●
Plug-in both on the line and load sides			—
■Mounting scheme (optional)			
Clip-in chassis			—
Mounting base for single-row installation			● ㊼
Mounting base for branched-into-dual-rows installation			● ㊼
■Accessories (optional)			**Symbol**
Toggle holder			H H ●
Toggle lock			H L —
Toggle cap			H C —
Interpole barrier			B A ●
■Standard specifications			
Overcurrent trip mechanism			Thermal-magnetic
Trip button (color)			Non
Handle position indication (ON: Red, OFF: Green)			Non
Suitability for isolation			Non
CE marking			Non

Notes:
● : "yes" or "available".
— : "no" or "not available".
㊹ : 2.5kA for 10A.
㊼ : Specify the branch bars when ordering. See page 7-86, 87 for details.

Time/Current characteristic curves

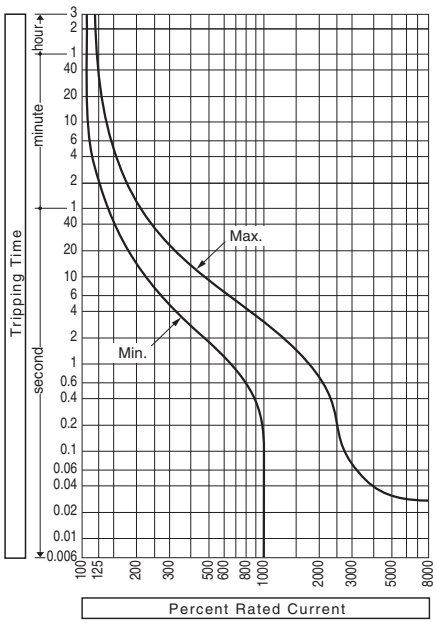

Ambient Compensating Curves

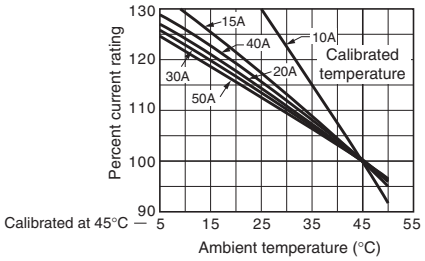

Outline dimensions (mm) TB-5P

2P

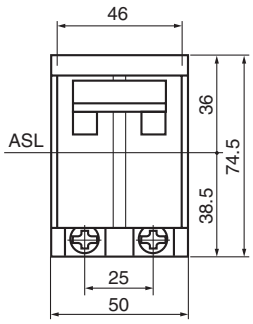

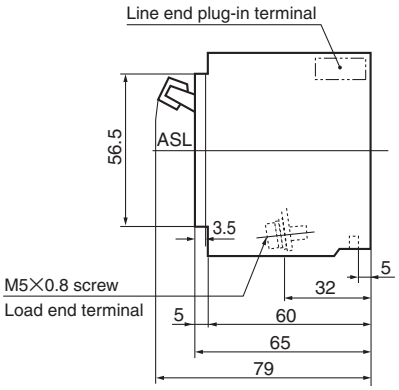

Preparation of conductor

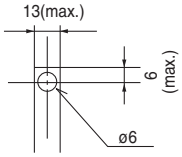

(t: 4 mm max.)

Single mounting base-TDB-50PC

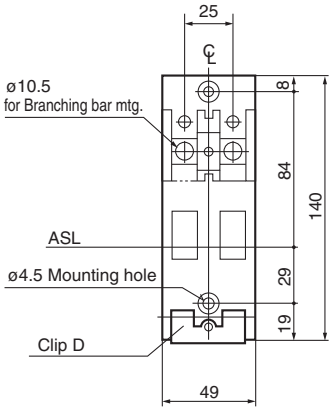

Example 1

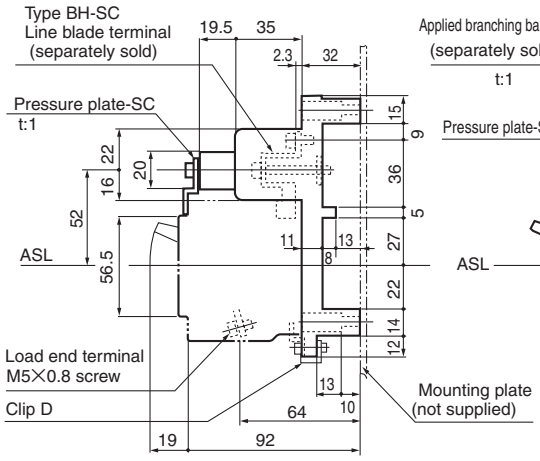

Example 2

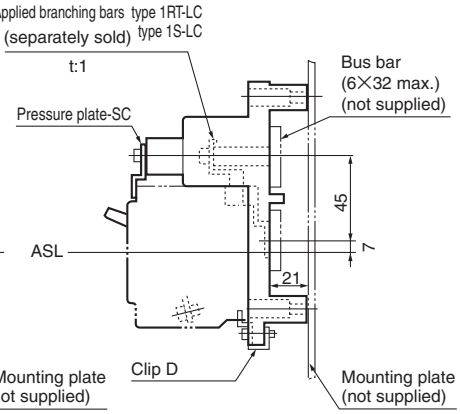

Double mounting base-TDA-50PC

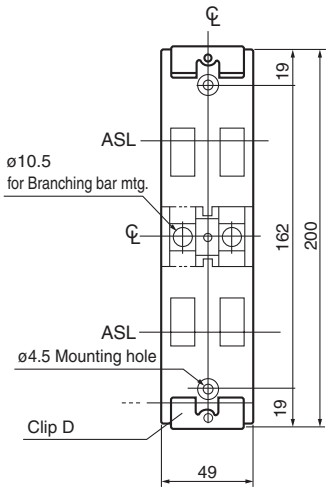

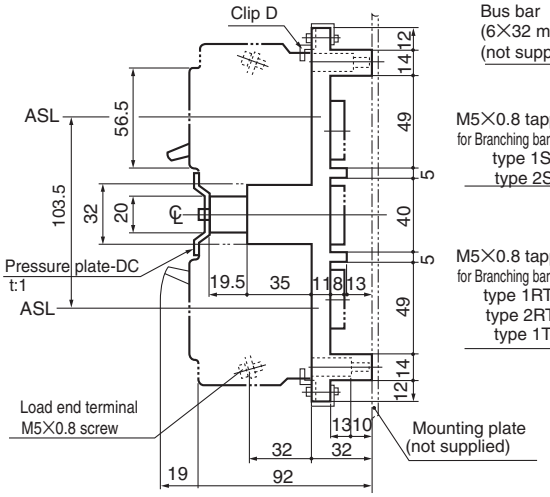

Drilling plan

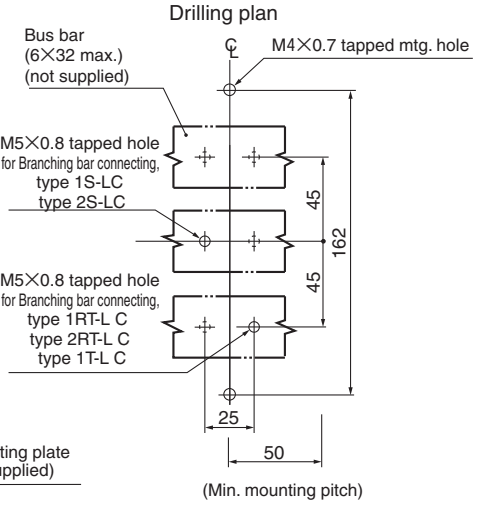

7 Characteristics and Outline Dimensions

Molded Case Circuit Breakers (50A Frame)

TB-5D

Ratings and Specifications

Type			TB-5D			
Number of poles			2			
■Ratings						
Rated current, A			10 30			
Calibrated at 45°C			15 40			
			20 50			
Rated voltage V	AC		250			
	DC		125			
■Rated breaking capacity, kA						
NK	AC	250 V	5 ㊹			
(sym)		125 V	42			
	DC	125 V	5			
Weight kg			0.28			
■Connecting scheme						
Front-connected both on the line and load sides			—			
Plug-in on the line side and front-connected on the load side			—			
Plug-in both on the line and load sides			●			
■Mounting scheme (optional)						
Clip-in chassis			—			
Mounting base for single-row installation			● ㊼			
Mounting base for branched-into-dual-rows installation			● ㊼			
■Accessories (optional)			**Symbol**			
Toggle holder			H H	●		
Toggle lock			H L	—		
Toggle cap			H C	—		
Interpole barrier			B A	●		
■Standard specifications						
Overcurrent trip mechanism				Thermal-magnetic		
Trip button (color)				Non		
Handle position indication (ON: Red, OFF: Green)				Non		
Suitability for isolation				Non		
CE marking				Non		

Notes:
● : "yes" or "available".
— : "no" or "not available".
㊹ : 2.5kA for 10A.
㊼ : Specify the branch bars when ordering. See page 7-86, 87 for details.

Time/Current characteristic curves

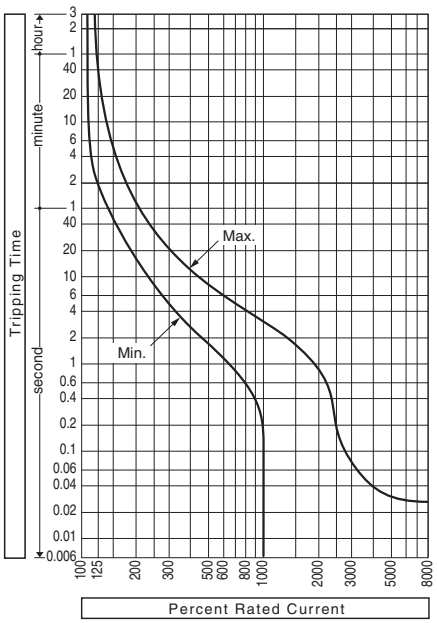

Ambient Compensating Curves

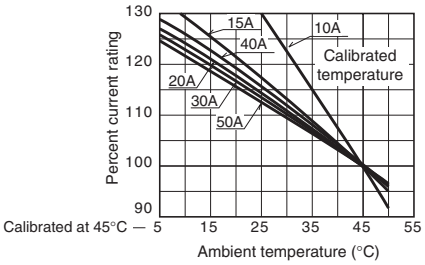

Outline dimensions (mm) TB-5D

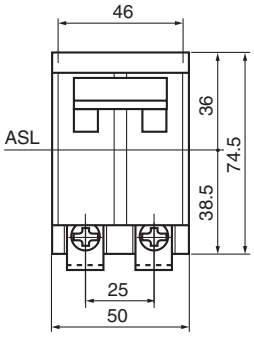

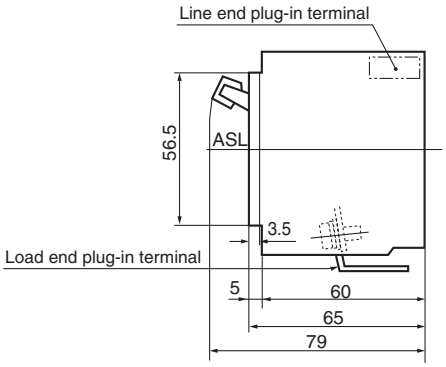

Single mounting base-TDB-50DC

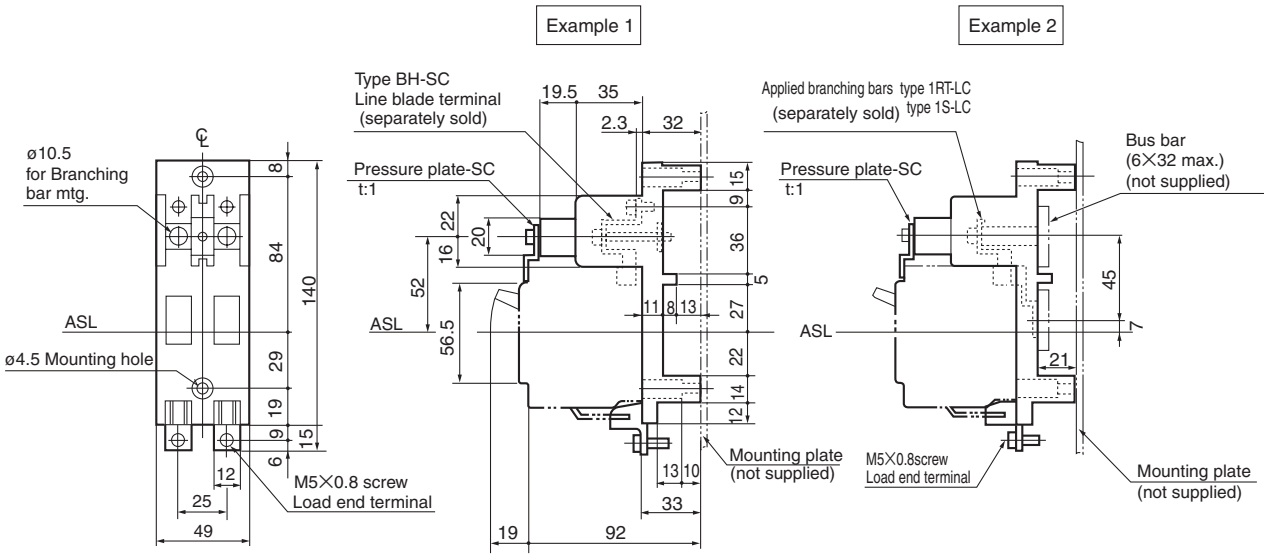

Double mounting base-TDA-50DC

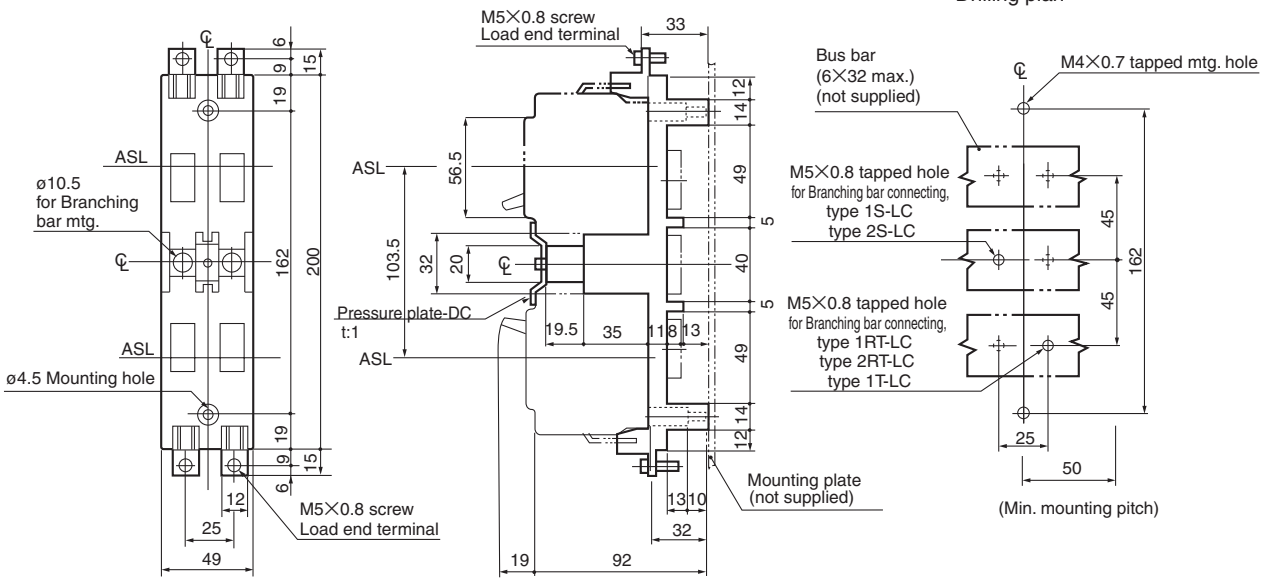

■Mounting bases, branching bars and other accessories

Mounting bases for dual-row installation (for four circuits)		
Type	**Applicable breaker**	**Outline**
TDA-50PC	TB-5P	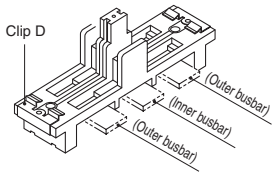
TDA-50DC	TB-5D	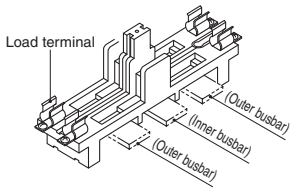
Mounting bases for single-row installation (for two circuits)		
Type	**Applicable breaker**	**Outline**
TDB-50PC	TB-5P	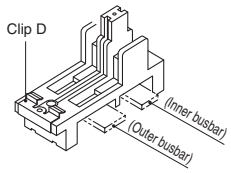
TDB-50DC	TB-5D	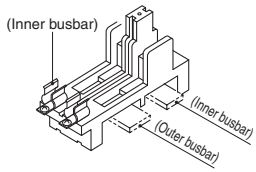
Accessories		
Name		**Outline**
Retainer plate DC		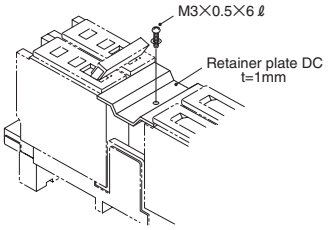
Retainer plate SC		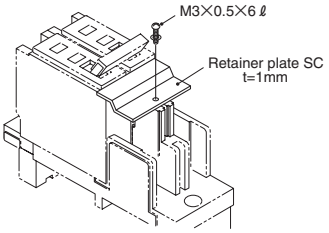
Braided line terminal BH-SC		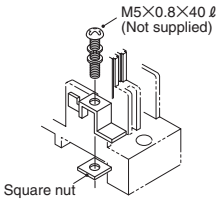

Branching bars		
Application	**Type**	**Arrangement**
Two branches from outer busbar	2RT-LC	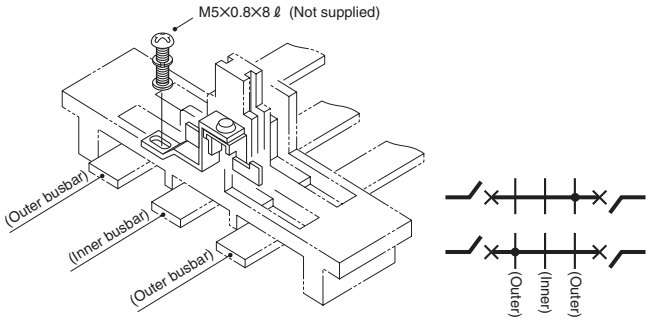
Two branches from inner busbar	2S-LC	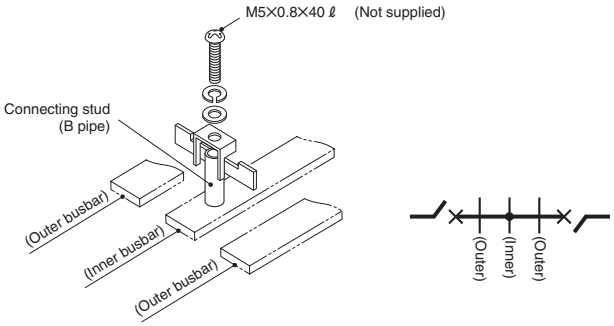
One branch from inner busbar	1S-LC	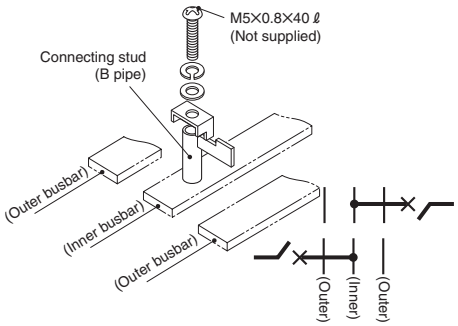
One branch from outer busbar	1RT-LC	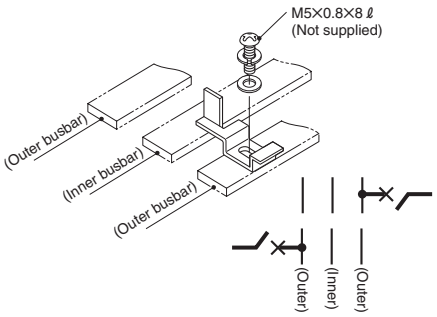
One branch from outer busbar in opposite direction	1T-LC	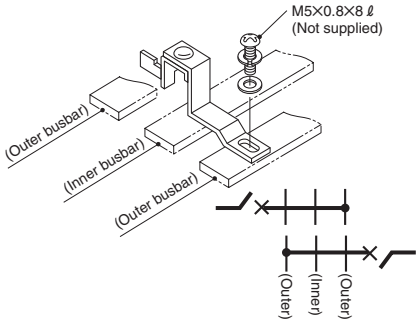

Outline dimensions (mm) (Type T2MC12) S50-GF, S100-NF, S100-GF, S100-NM, S100-NN, S125-NF, S125-GF, S125-NN

Front-connected

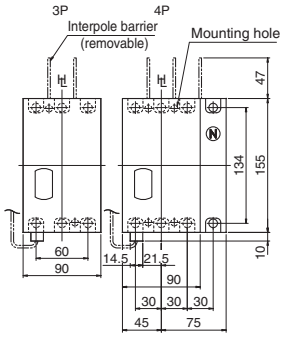

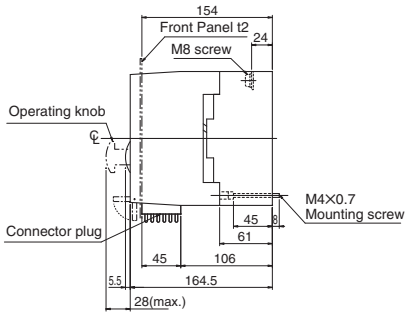

Preparation of conductor

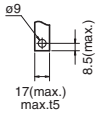

Drilling plan (front view)

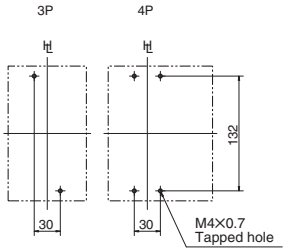

Rear-connected

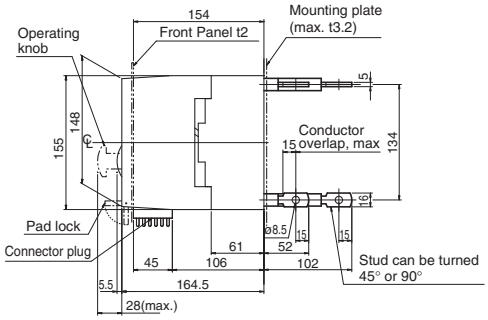

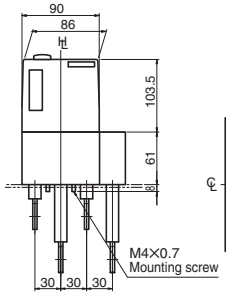

Drilling plan (front view)

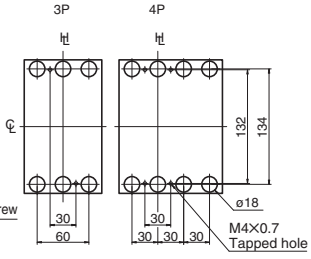

Panel cutout (front view)

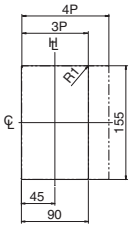

Panel cutout dimensions shown give an allowance of 1.5mm around motor operator.

Plug-in (Standard)

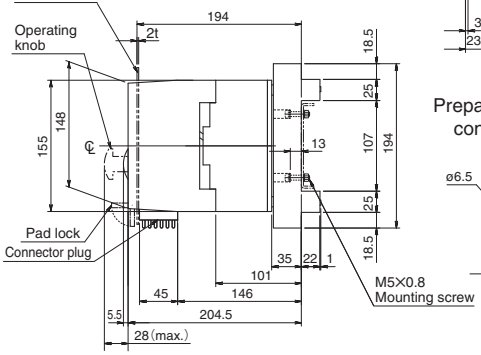

Detail of connecting part

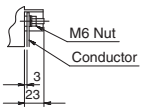

Preparation of conductor

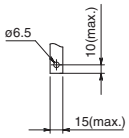

Mounting base (rear view)

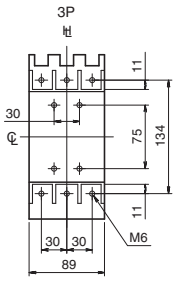

Drilling plan (front view)

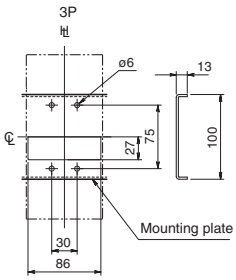

Panel hinge position (hatching area) (bottom view)

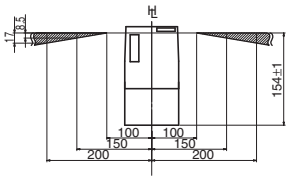

Plug-in (High-performance)

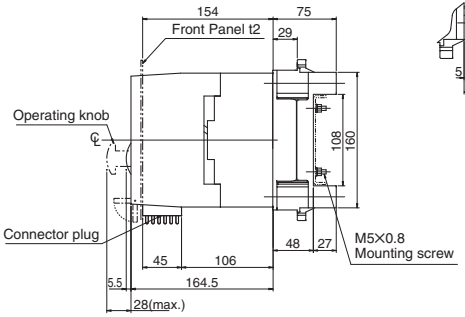

Detail of connecting part

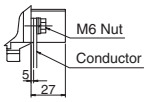

Preparation of conductor

Mounting base (rear view)

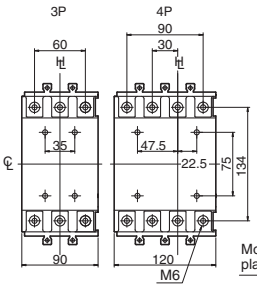

Drilling plan (front view)

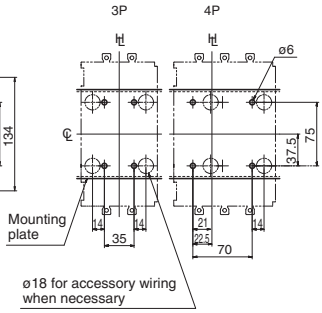

Outline dimensions (mm) (Type T2MC25) S225-NF, S225-GF, S225-NM, S250-NF, S250-GF

Front-connected

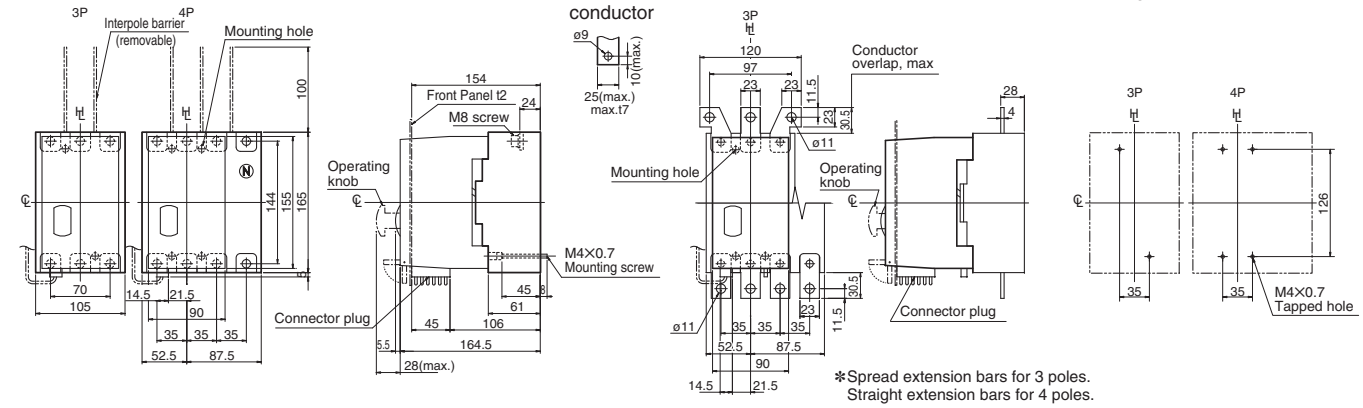

Rear-connected

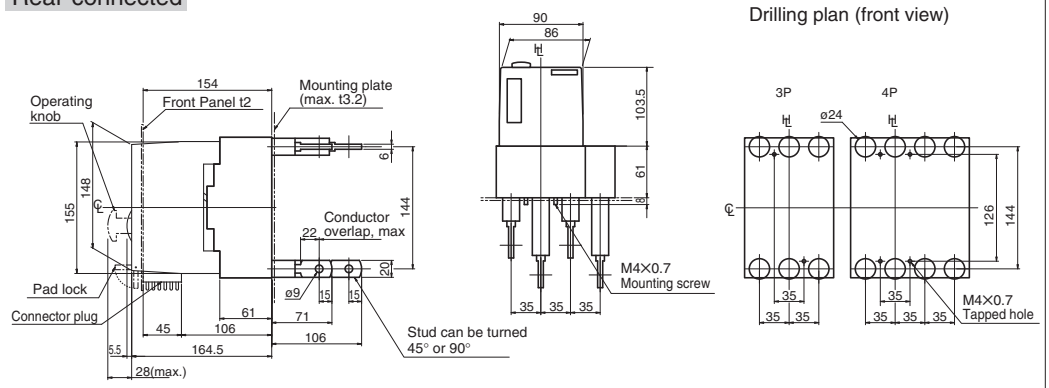

Panel cutout (front view)

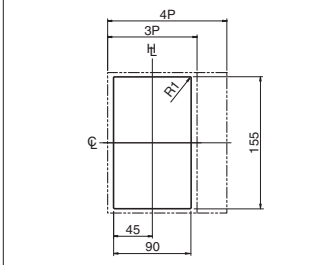

Panel cutout dimensions shown give an allowance of 1.5mm around motor operator.

Plug-in (Standard)

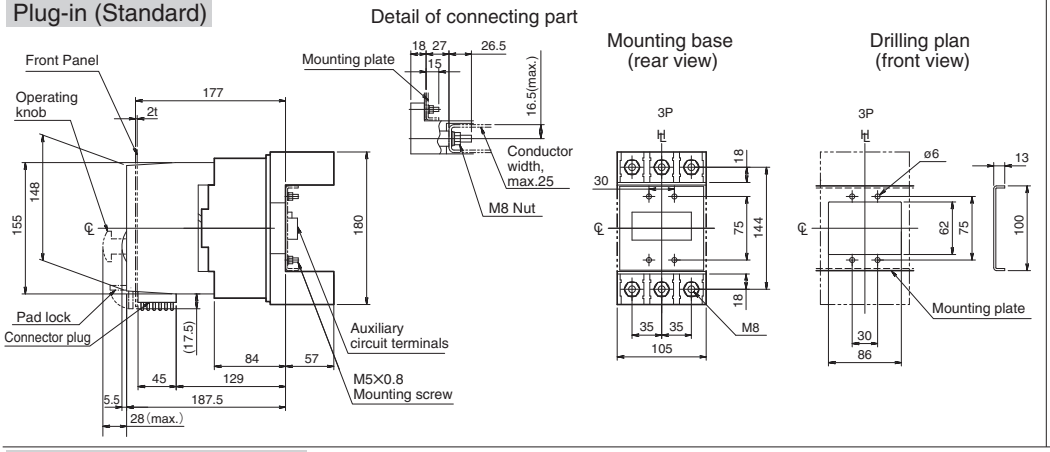

Panel hinge position (hatching area) (bottom view)

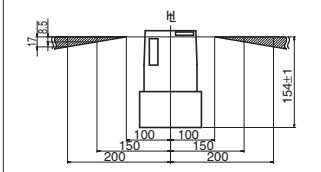

Plug-in (High-performance)

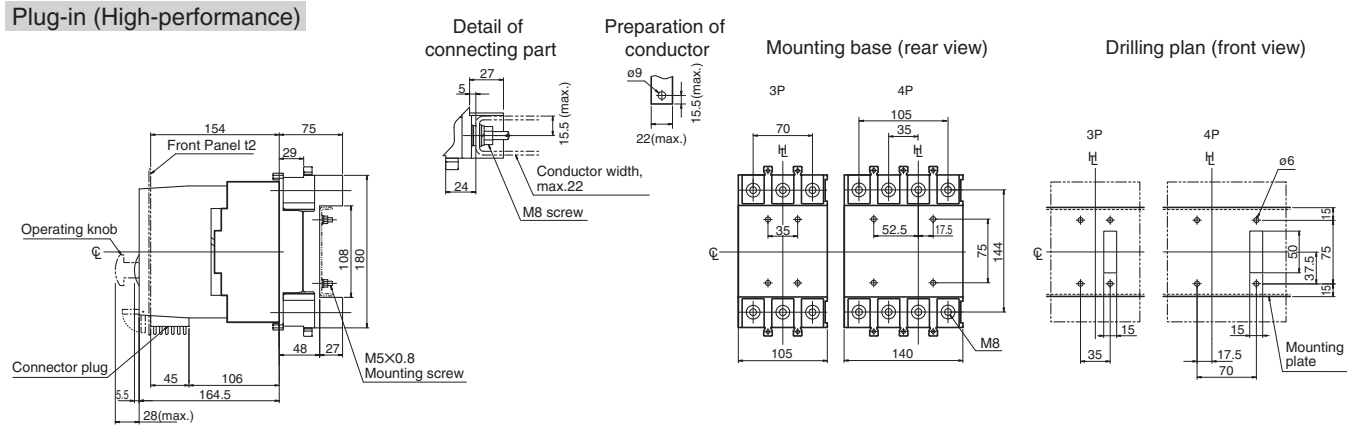

Outline dimensions (mm) (Type T2MC25L) E250-SF, S250-SF, S250-SN

Front-connected

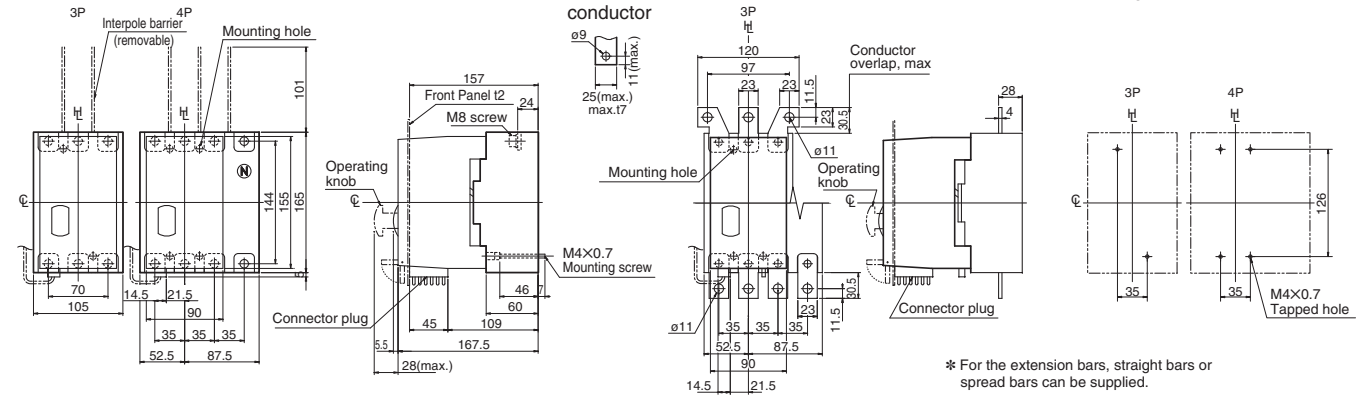

✻ For the extension bars, straight bars or spread bars can be supplied.

Rear-connected

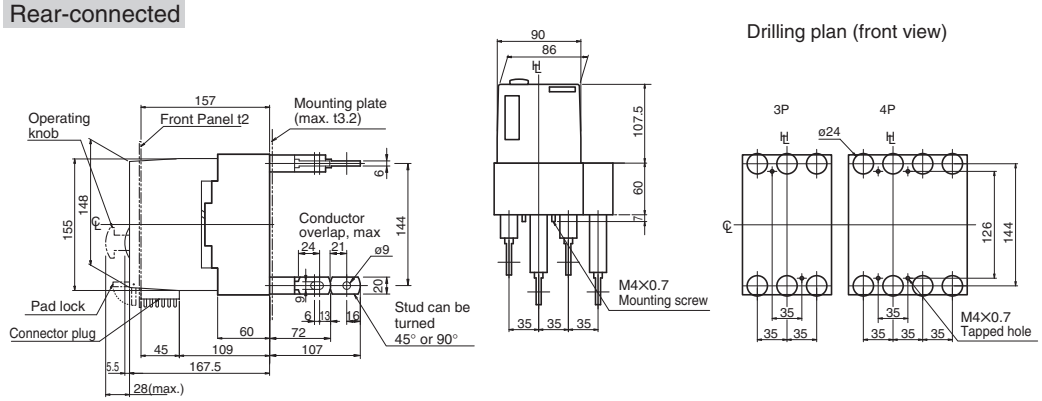

Panel cutout (front view)

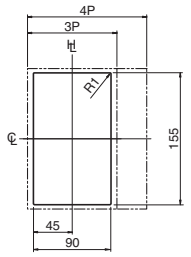

Panel cutout dimensions shown give an allowance of 1.5mm around motor operator.

Plug-in (Standard)

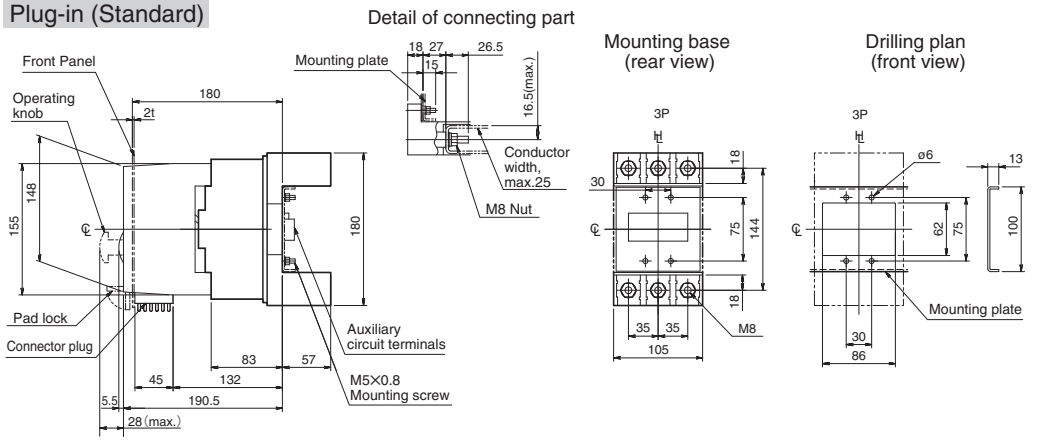

Panel hinge position (hatching area) (bottom view)

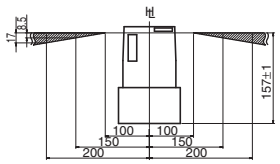

Outline dimensions (mm) (Type T2MC12, T2MC25) H100, H125, H225, L100, L125, L225, S225-GE

Front-connected

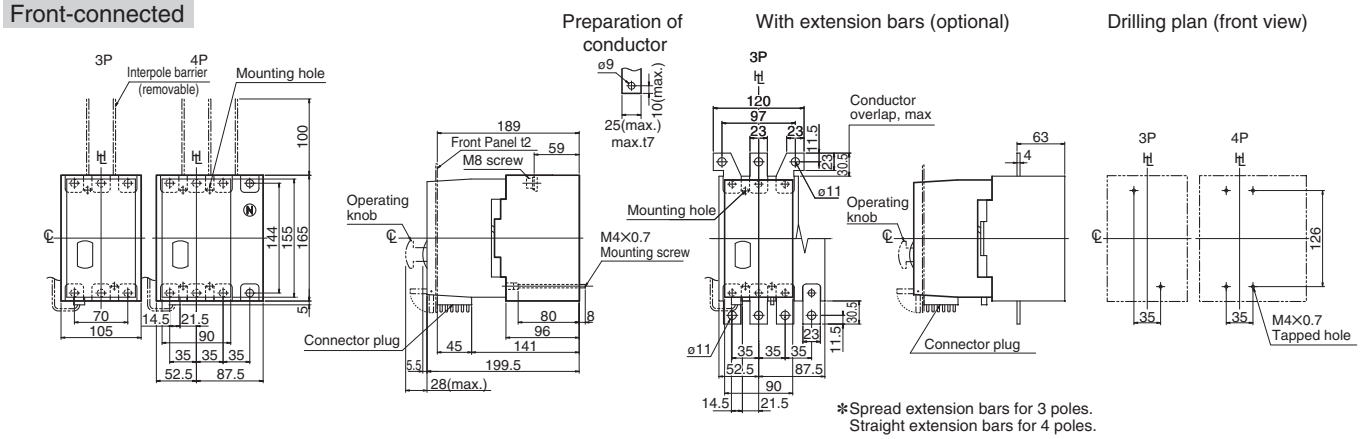

Rear-connected

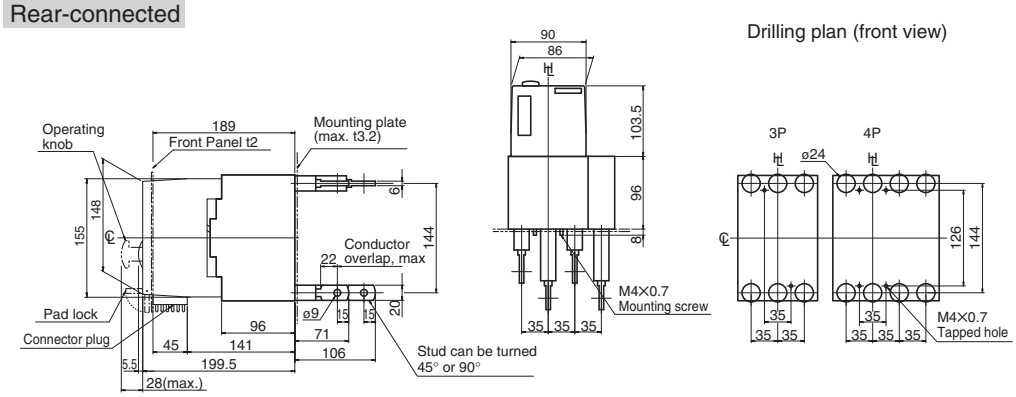

Panel cutout (front view)

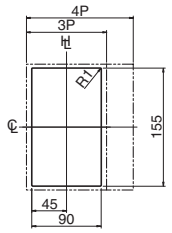

Panel cutout dimensions shown give an allowance of 1.5mm around motor operator.

Plug-in (Standard)

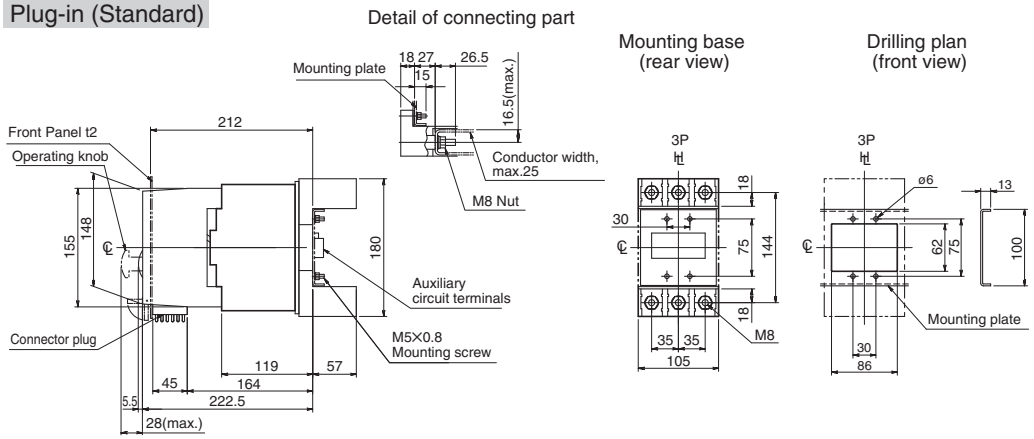

Panel hinge position (hatching area) (bottom view)

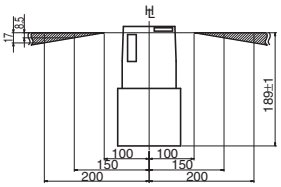

Plug-in (High-performance)

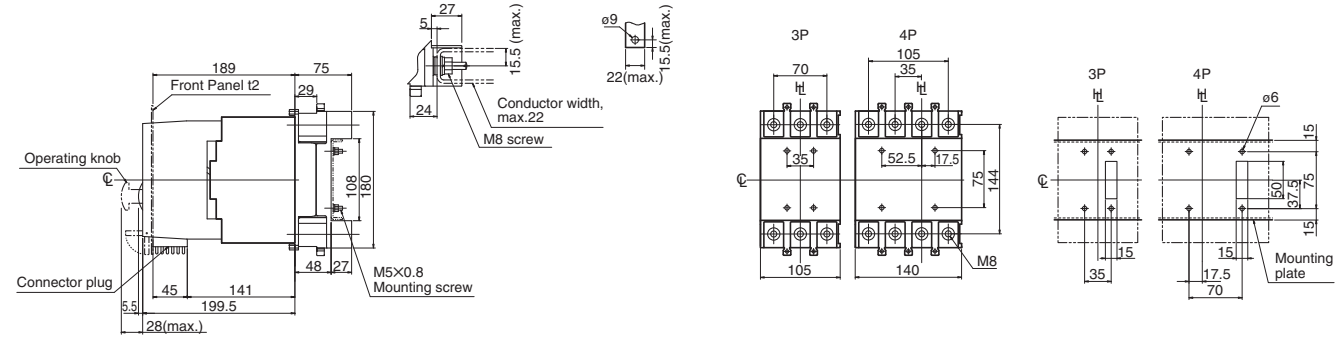

Outline dimensions (mm) (Type T2MC40) S400

Front-connected

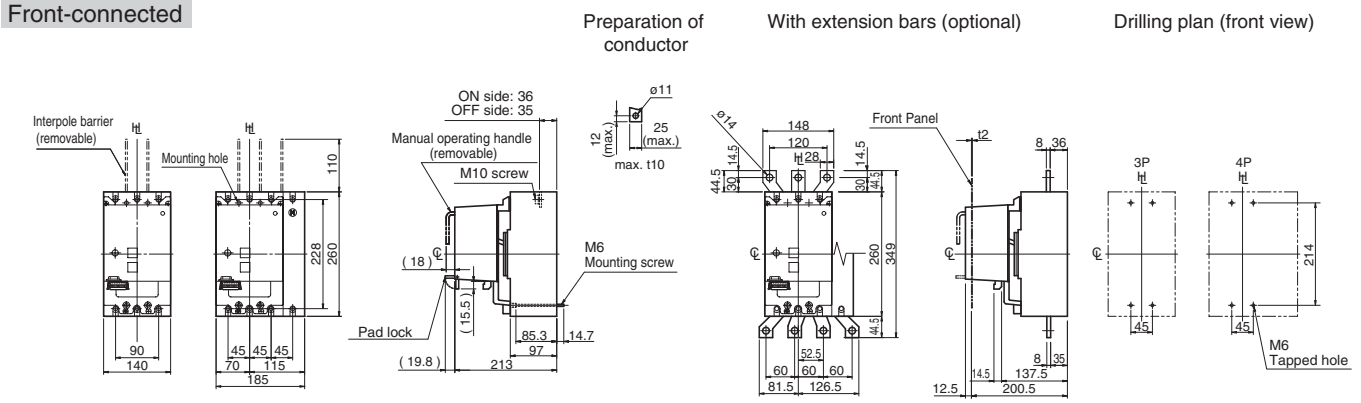

Rear-connected

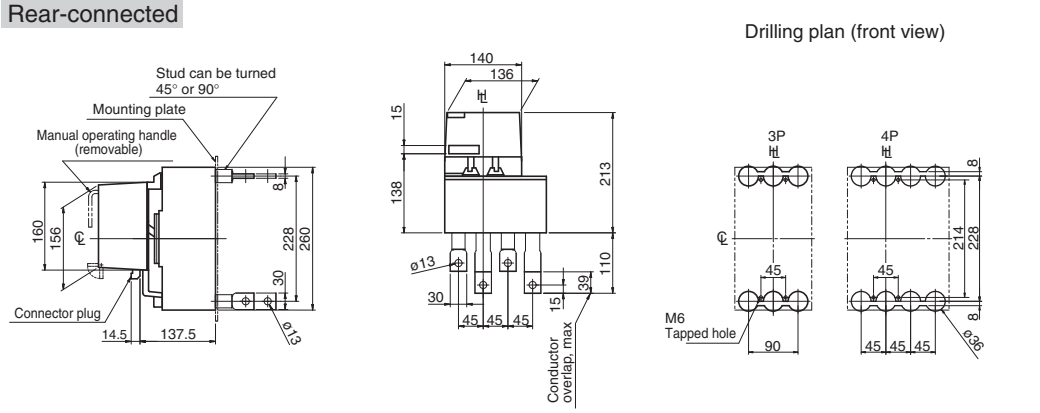

Note: Studs are factory installed in horizontal direction both on the line and load sides.

Panel cutout (front view)

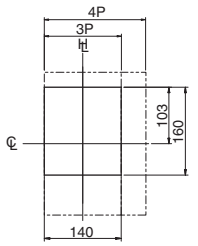

Panel cutout dimensions shown give an allowance of 1.5mm around motor operator.

Plug-in (Standard)

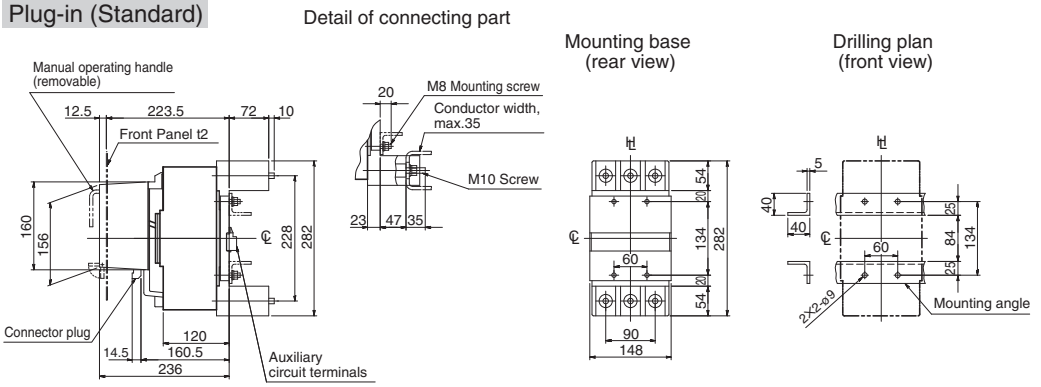

Panel hinge position (hatching area) (bottom view)

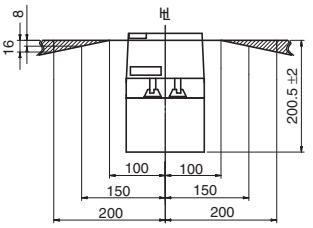

Plug-in (High-performance)

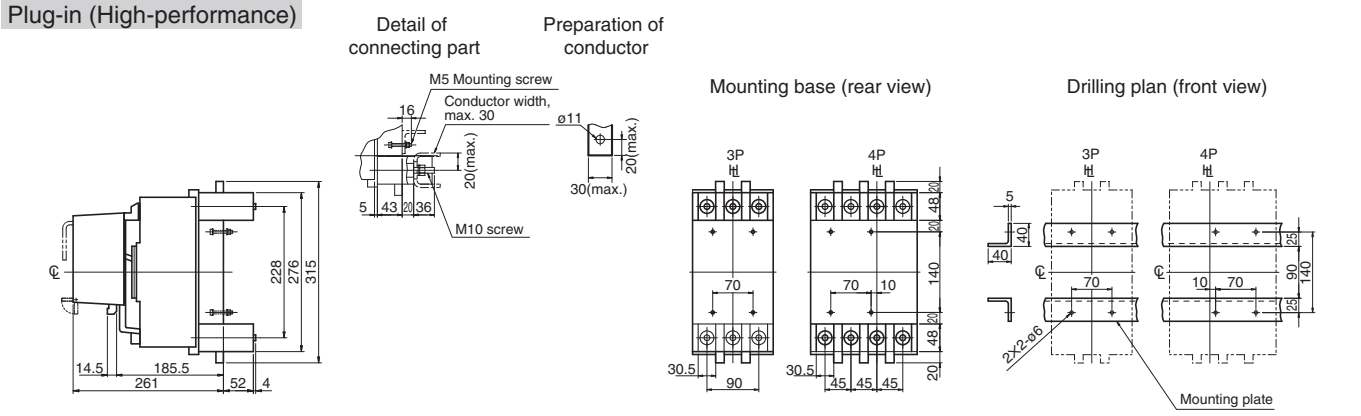

Outline dimensions (mm) (Type T2MC40) H400, L400

Front-connected

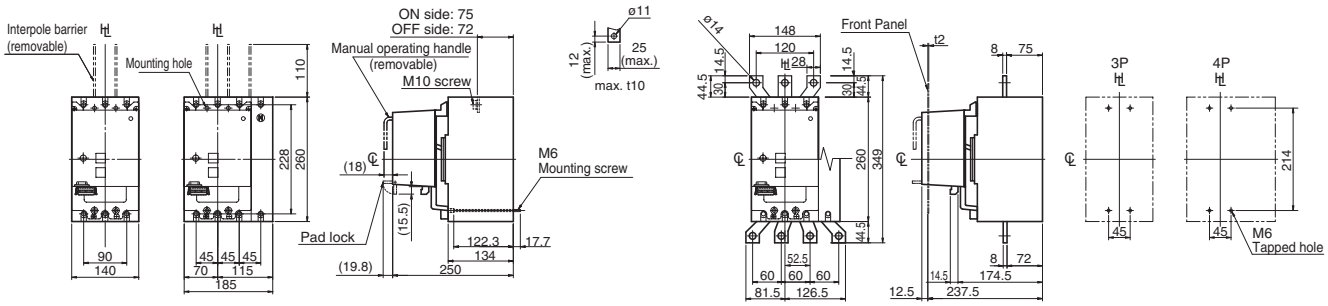

Rear-connected

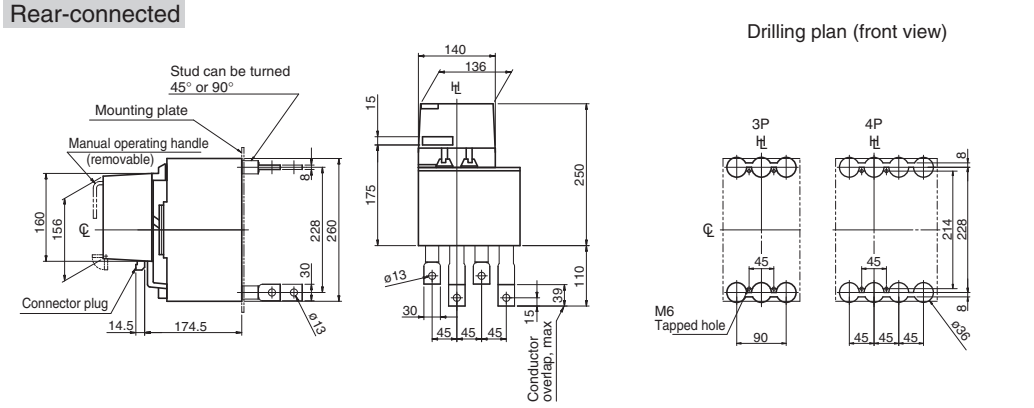

Note: Studs are factory installed in horizontal direction both on the line and load sides.

Panel cutout (front view)

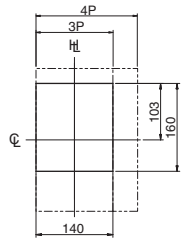

Panel cutout dimensions shown give an allowance of 1.5mm around motor operator.

Plug-in (Standard)

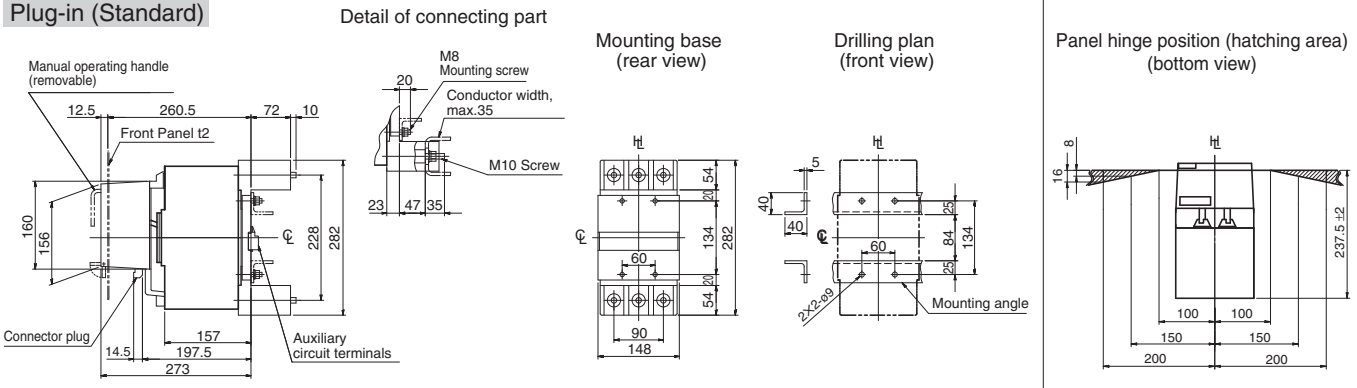

Plug-in (High-performance)

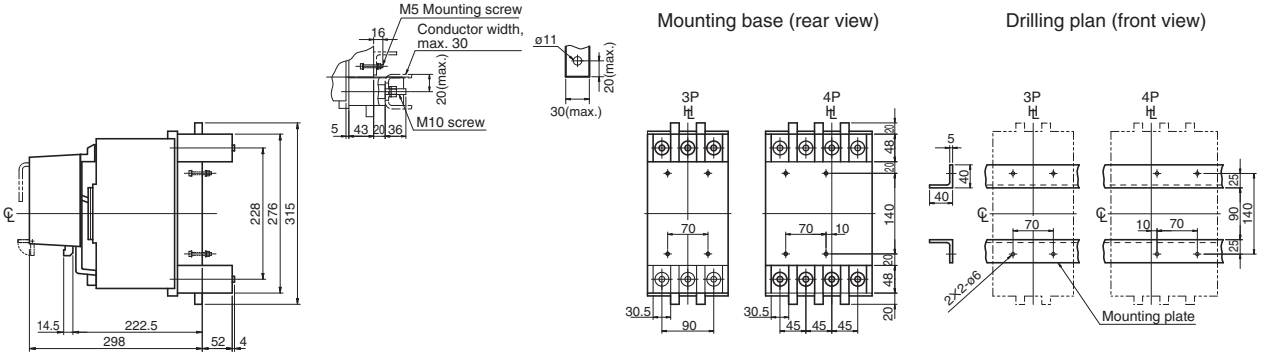

Outline dimensions (mm) (Type T2MC80) S630, S800

Front-connected

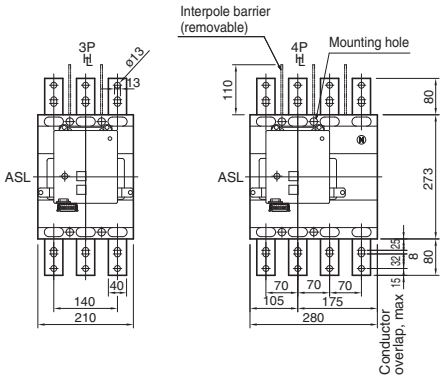

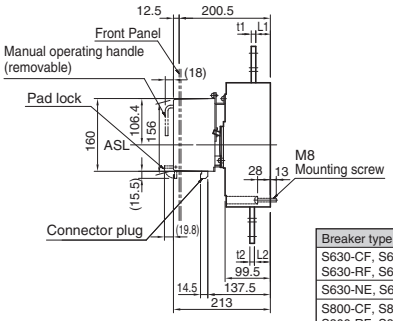

Drilling plan (front view)

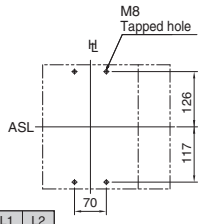

Breaker type	t1	t2	L1	L2
S630-CF, S630-NF S630-RF, S630-PF, S630-GN	8	8	32	34
S630-NE, S630-RE, S630-PE	8	8	32	36
S800-CF, S800-NF S800-RF, S800-PF, S800-NN	10	10	32	35
S800-NE, S800-RE, S800-PE	10	10	32	36

Rear-connected

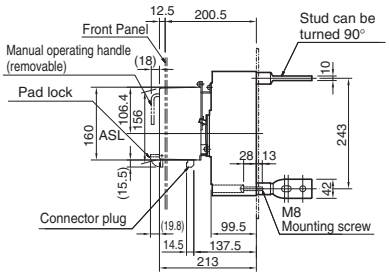

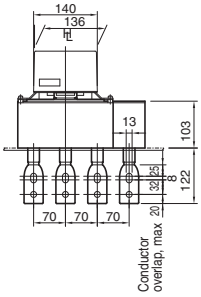

Drilling plan (front view)

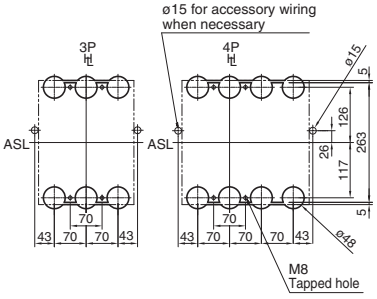

Note: Studs are factory installed in horizontal direction both on the line and load sides.

Panel cutout (front view)

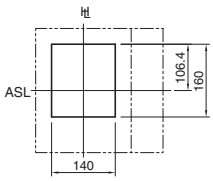

Panel cutout dimensions shown give an allowance of 1.5mm around motor operator.

Plug-in (Standard)

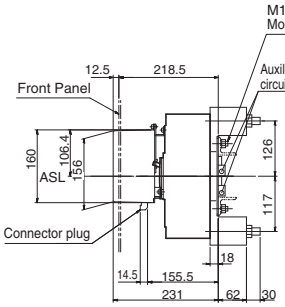

Detail of connecting part

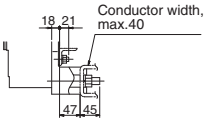

Mounting base (rear view)

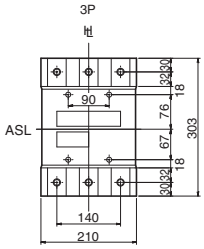

Drilling plan (front view)

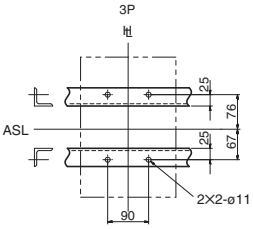

Panel hinge position (hatching area) (bottom view)

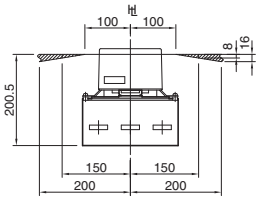

Plug-in (High-performance)

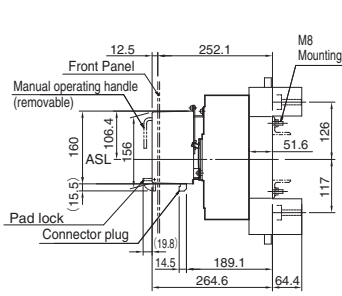

Detail of connecting part and Preparation of conductor

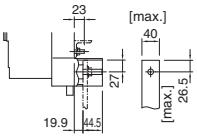

Mounting base (rear view)

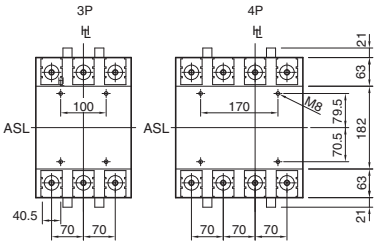

Drilling plan (front view)

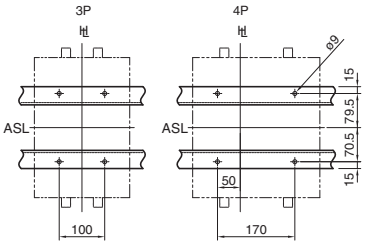

Outline dimensions (mm) (Type T2MC80) H630, H800, L630, L800

Front-connected

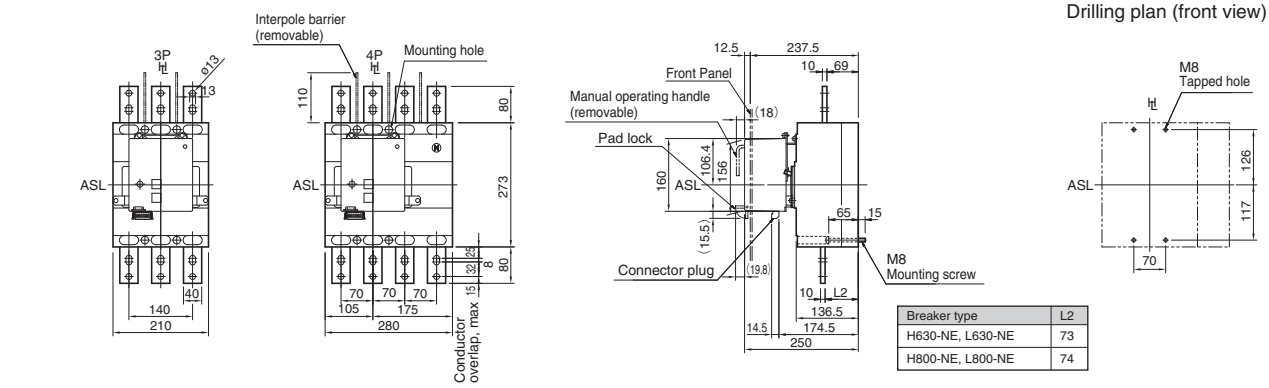

Breaker type	L2
H630-NE, L630-NE	73
H800-NE, L800-NE	74

Rear-connected

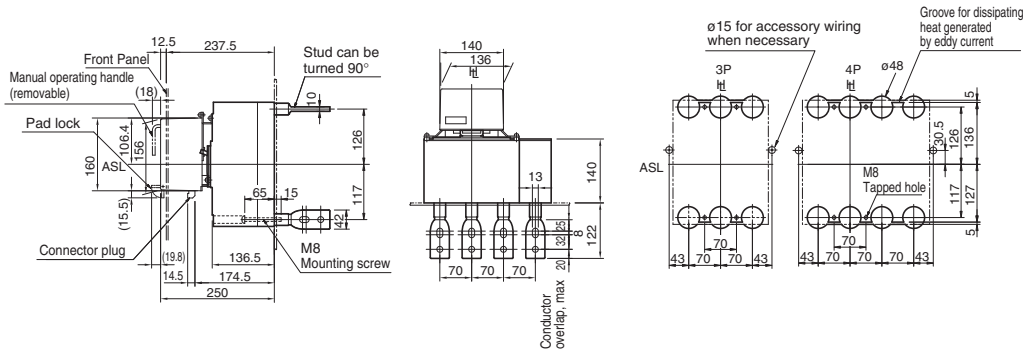

Note: Studs are factory installed in horizontal direction both on the line and load sides.

Panel cutout (front view)

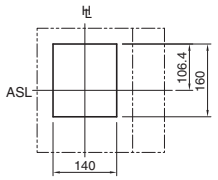

Panel cutout dimensions shown give an allowance of 1.5mm around motor operator.

Plug-in (Standard)

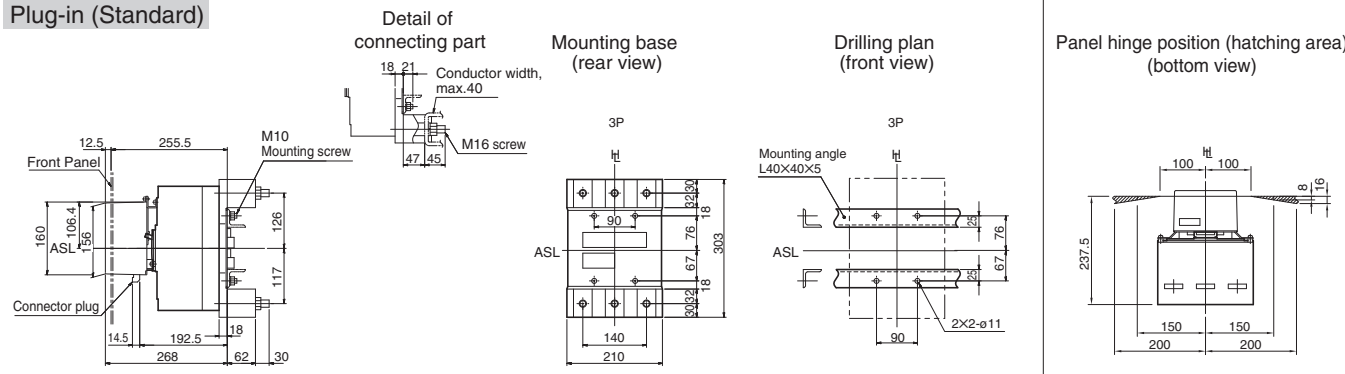

Plug-in (High-performance)

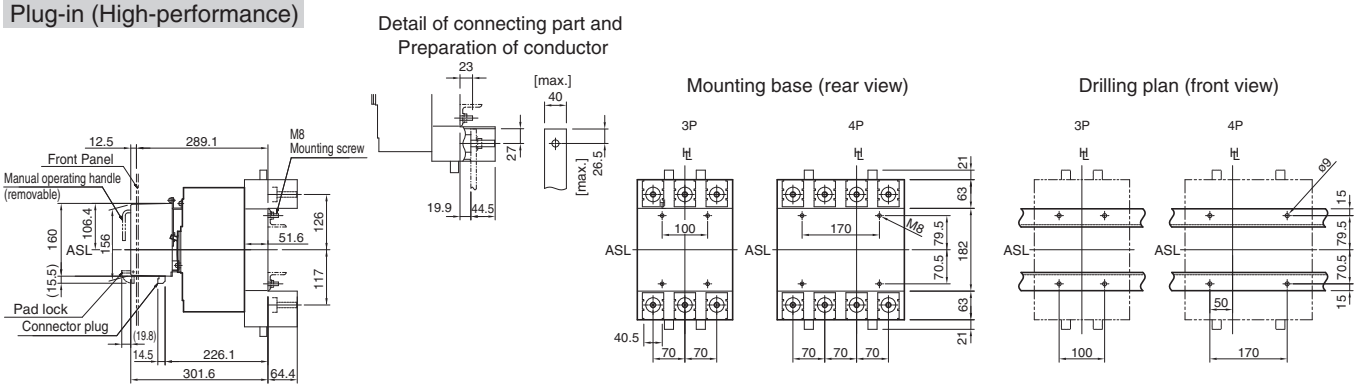

Outline dimensions (mm) (Type XMD9) TL-1000NE, TL-1200NE

Front-connected

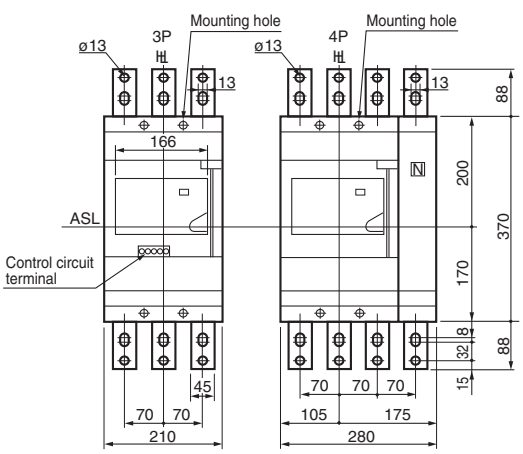

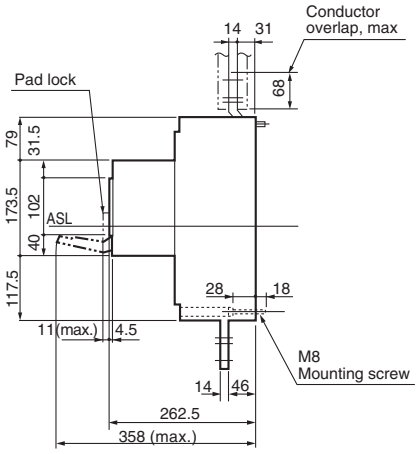

Drilling plan (front view)

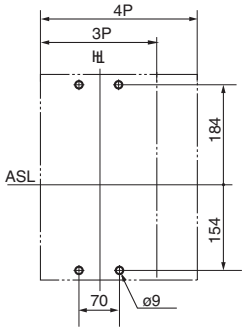

Rear-connected

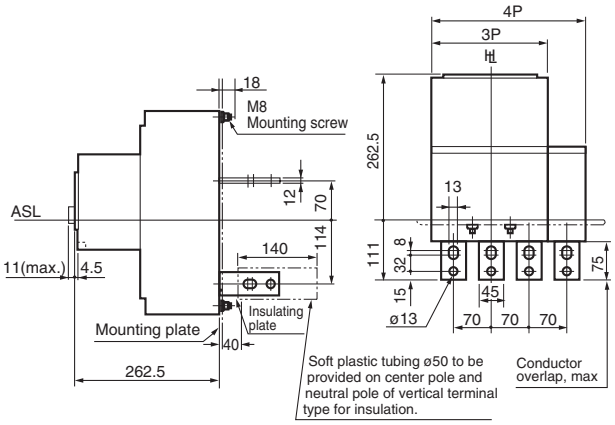

Drilling plan (front view)

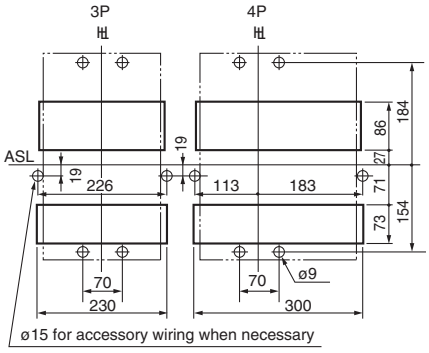

Panel cutout (front view)

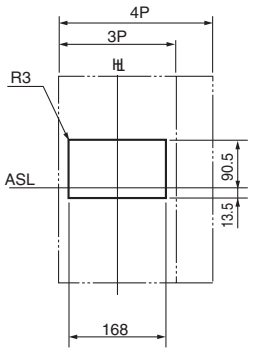

Note: Studs are factory installed in horizontal direction both on the line and load sides.

Plug-in (Standard)

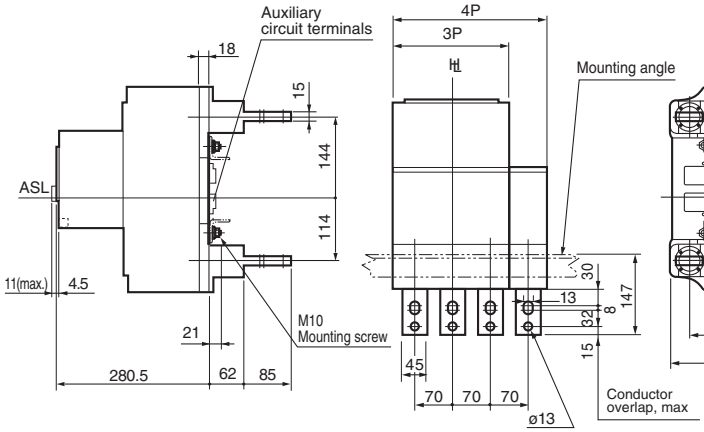

Mounting base (XDM8)

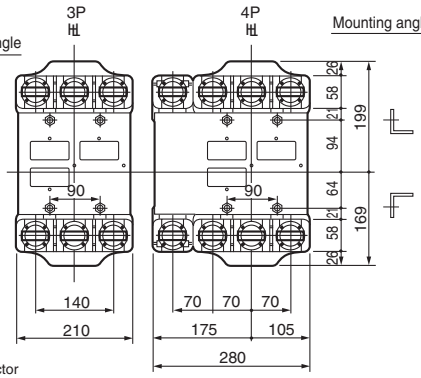

Drilling plan (front view)

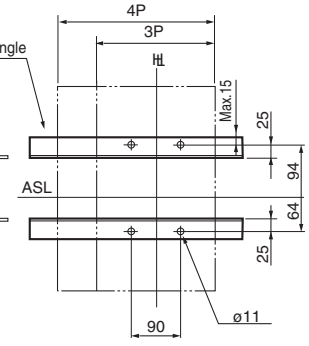

Outline dimensions (mm) (Type T2MCX6) S1250-NE, S1250-GE, S1250-NN

Front-connected

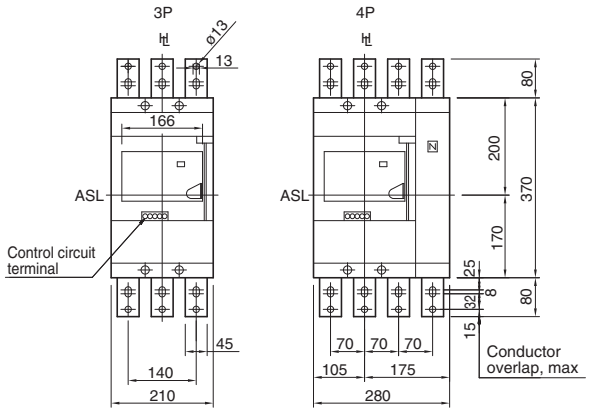

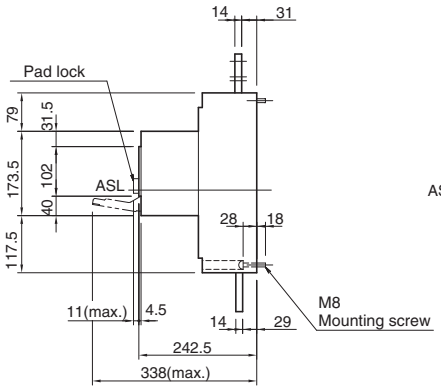

Drilling plan (front view)

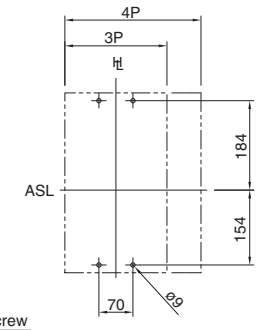

Rear-connected

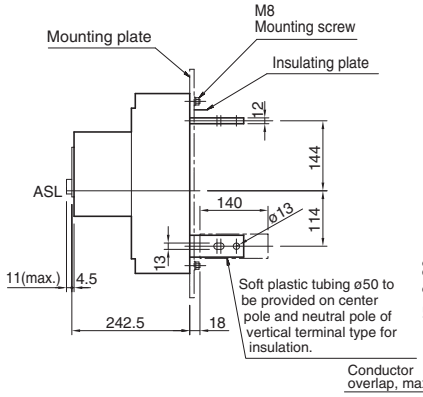

Drilling plan (front view)

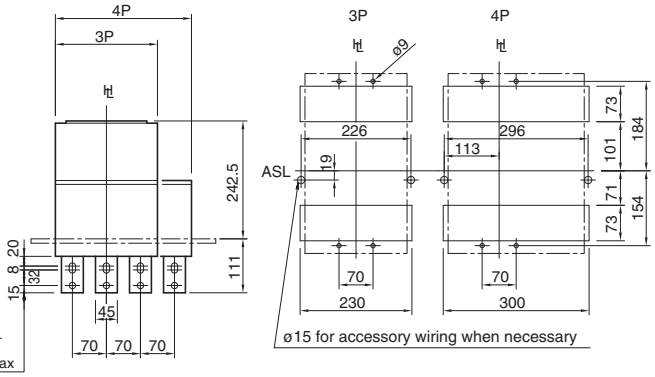

Panel cutout (front view)

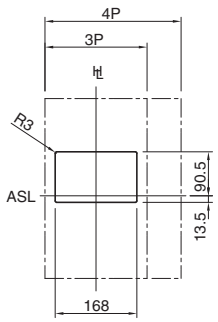

Panel cutout dimensions shown give an allowance of 1.0mm around motor operator.

Note: Studs are factory installed in horizontal direction both on the line and load sides.

Plug-in (Standard)

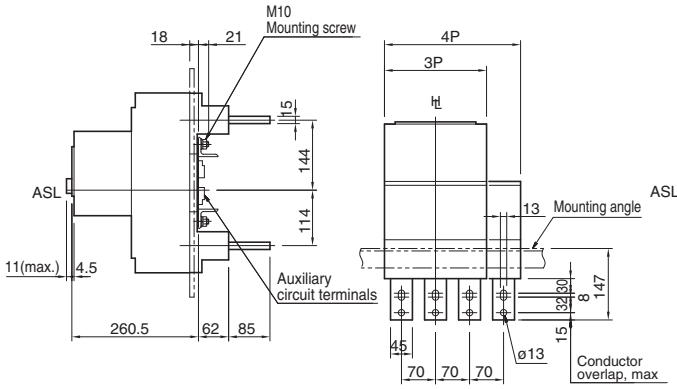

Mounting base (rear view)

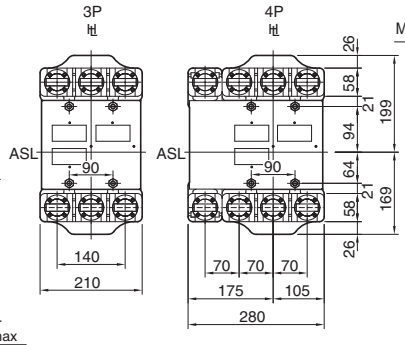

Drilling plan (front view)

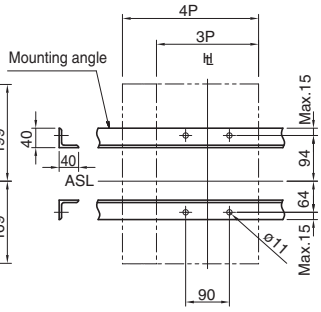

Outline dimensions (mm) (Type T2MCX6) S1600-NE, S1600-NN

Front-connected

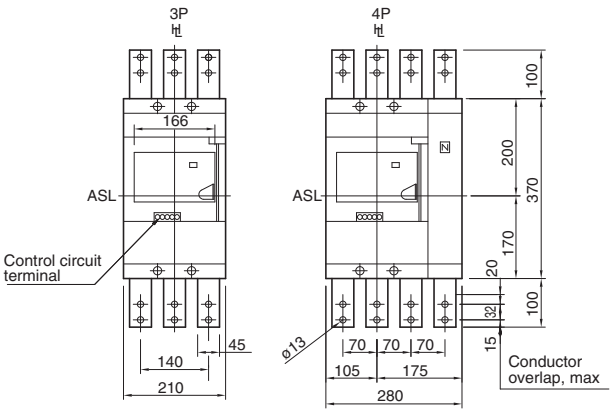

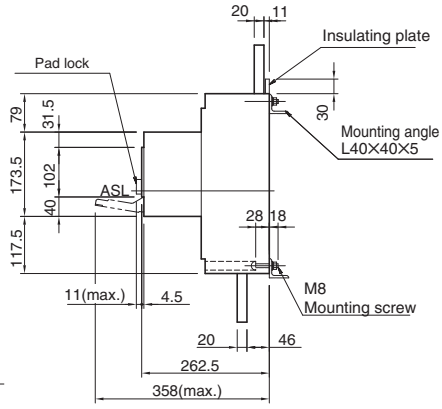

Drilling plan (front view)

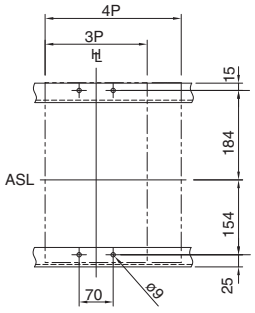

Rear-connected

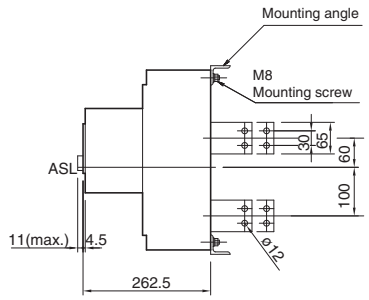

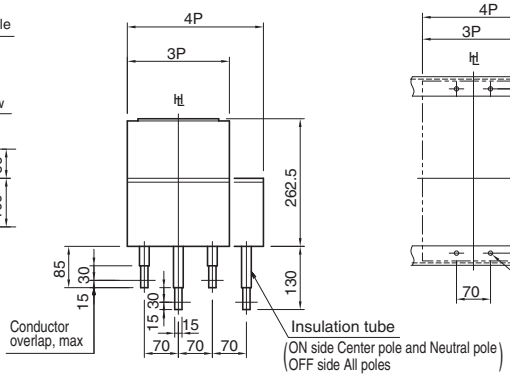

Drilling plan (front view)

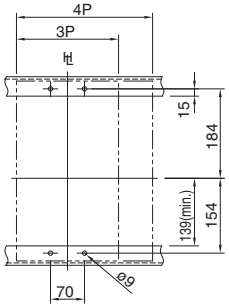

Panel cutout (front view)

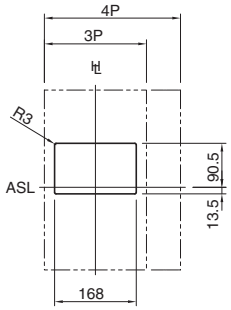

Panel cutout dimensions shown give an allowance of 1.0mm around motor operator.

Draw-out

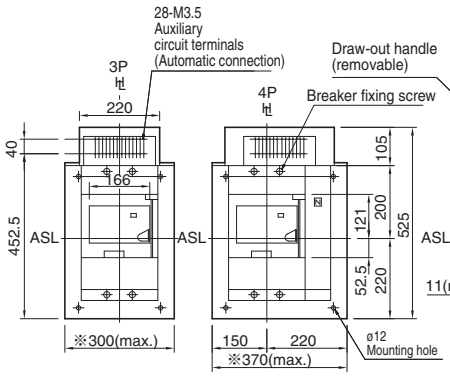

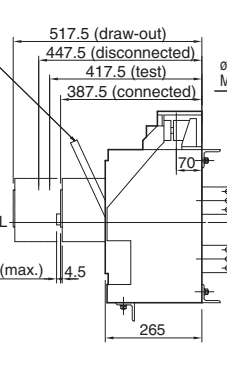

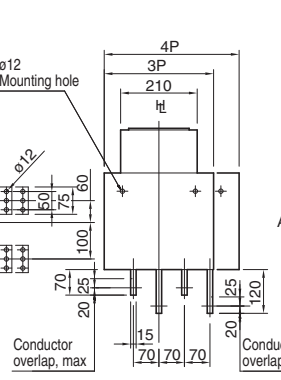

Drilling plan (front view)

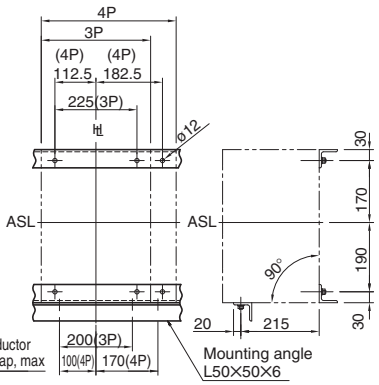

※Contact TERASAKI if manual connection is required.

Outline dimensions (mm) (Type XMB10) XS2000NE, XS2000NN

Front-connected

Drilling plan (front view)

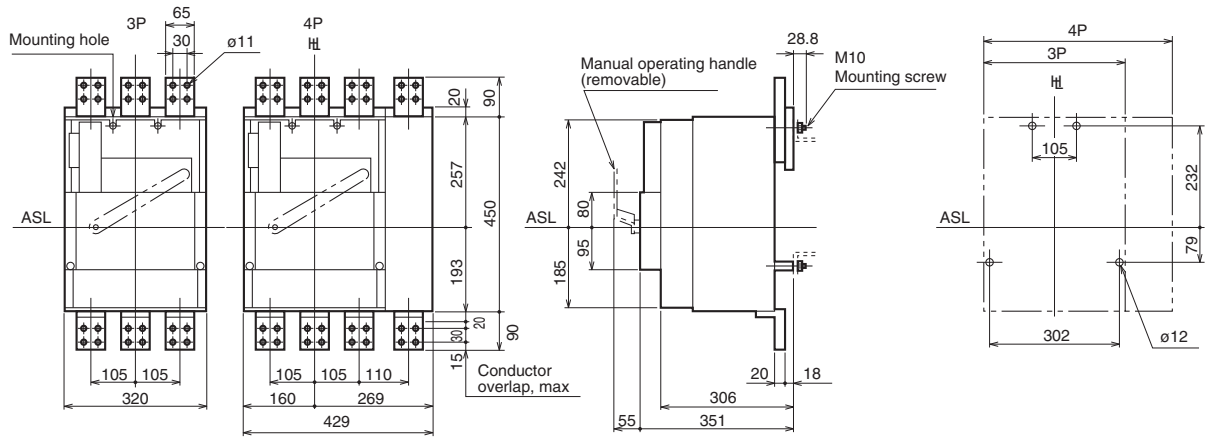

Rear-connected

Drilling plan (front view)

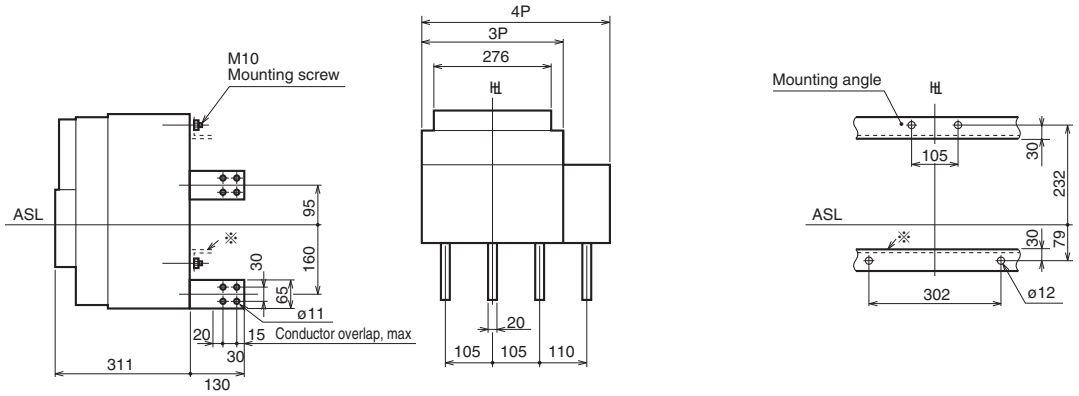

※Use non-magnetic angle (SUS 304 etc.)

Draw-out

Drilling plan (front view)

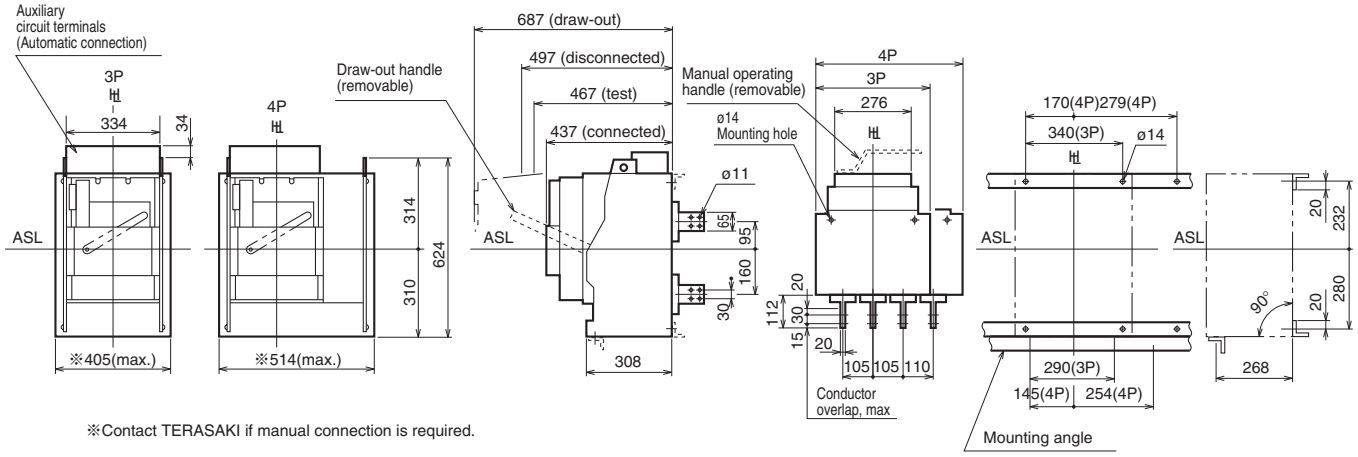

※Contact TERASAKI if manual connection is required.

Outline dimensions (mm) (Type XMB1) E50-SF

Front-connected

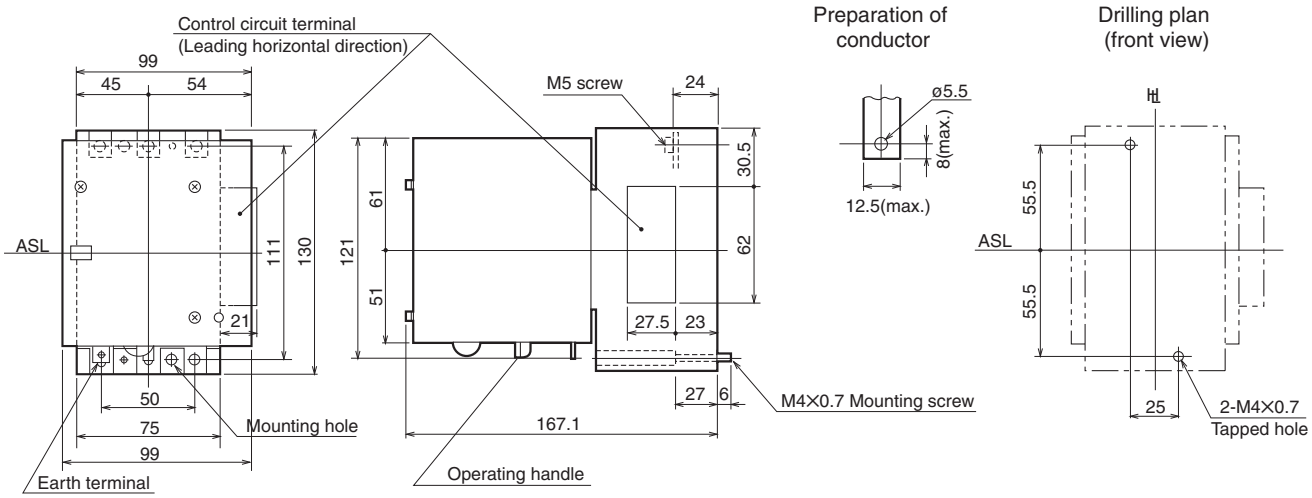

Rear-connected

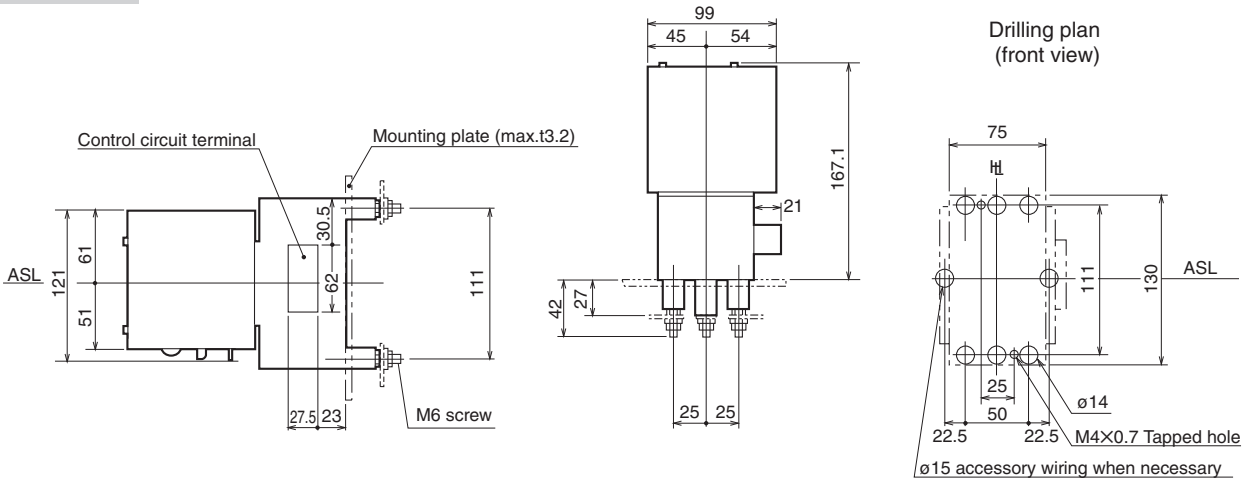

Plug-in (Standard)

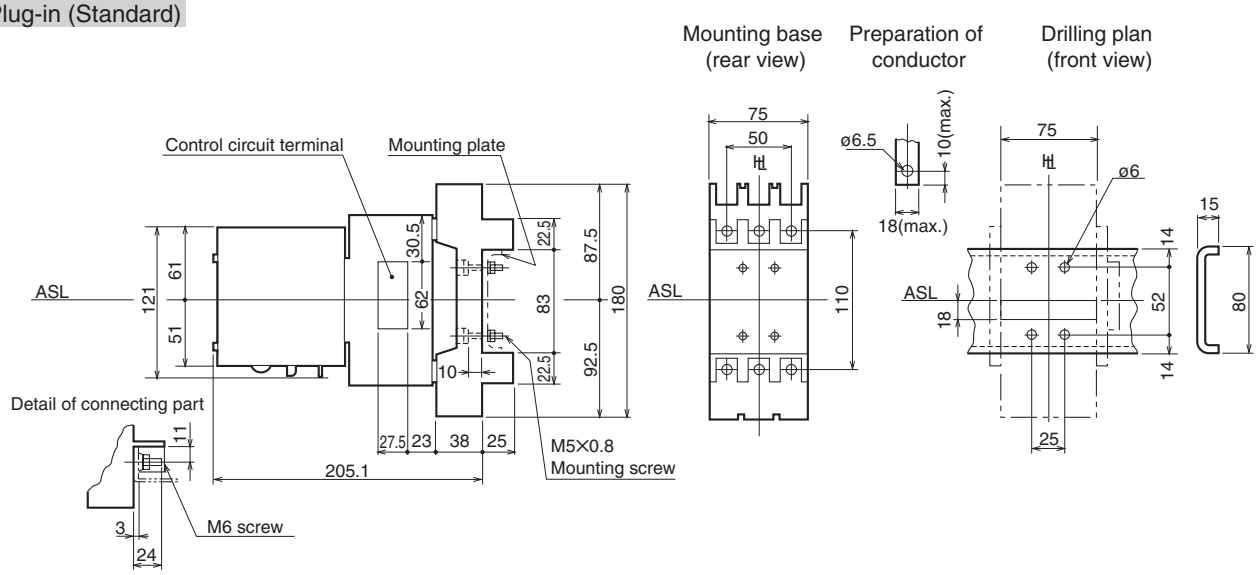

Note: Above outline dimensions are for AC operated Motor operators. For DC Motor, contact us for details.

Outline dimensions (mm) (Type XMB1) E100-SF

Front-connected

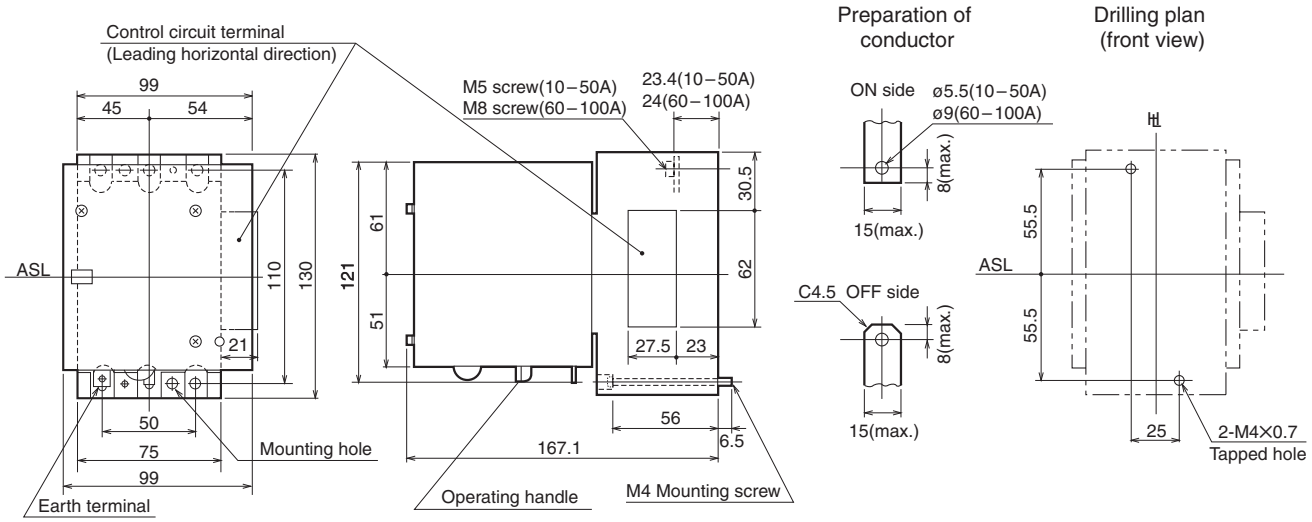

Rear-connected

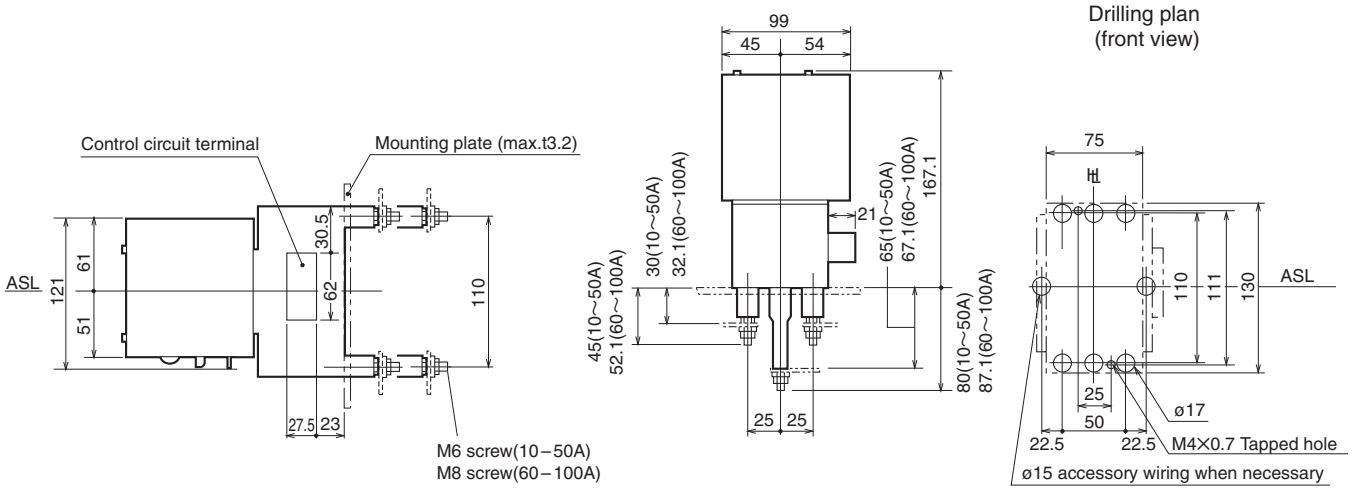

Plug-in (Standard)

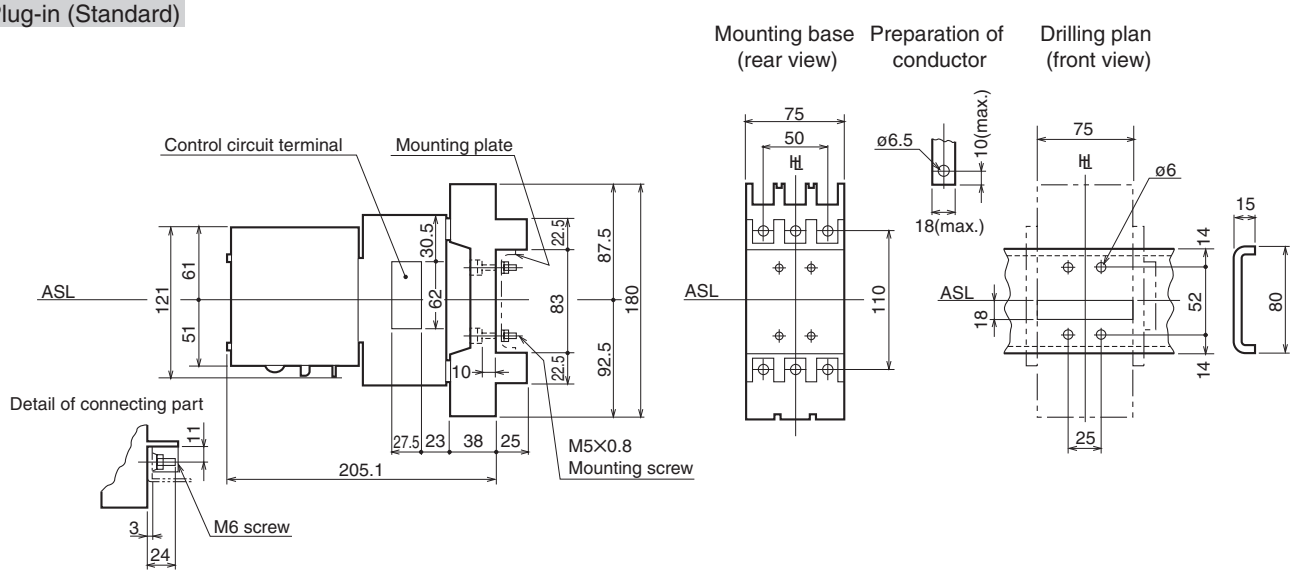

Note: Above outline dimensions are for AC operated Motor operators. For DC Motor, contact us for details.

8 Handling and maintenance

8 Handling and maintenance

1 Transportation and storage 2 Environmental operating conditions 3 Installation and connection

1 Transportation and storage

■ Storage Precautions

- Avoid corrosive gases:
  Do not leave the breakers in an atmosphere of hydrogen sulfide or ammonia gas.
- Avoid humidity:
  Do not leave the breakers in high humidity for a long period.
- Avoid direct sunlight:
  Do not expose the breakers to direct sunlight for a long period.
- Avoid dust:
  Keep the breakers in the ON position and covered against dust during storage.
- Storage temperature: –20 to +60°C

■ Transportation Precautions

• Handle and transport with care:

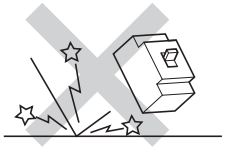

Do not drop the breakers during transportation. Carefully pack the breakers before transportation.
Take due measures against moisture and gas absorption of the breakers during long transportation.

• Hold by the breaker body:

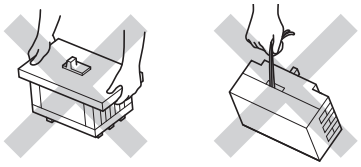

Be sure to hold the breaker by its body during handling and transportation.
Holding the breaker by a lead wire, terminal cover, stud or flash plate may result in the breaker being dropped, damaged and/or failed.

2 Environmental operating conditions

Use the breakers in the following environmental conditions:

Ambient temperature	–5 °C to +45°C. The average ambient temperature over a period of 24 hours must not exceed 35°C
Humidity	85% or less, no condensation
Vibration/Shock	No unusual vibration and mechanical shock
Altitude	2,000 m max
Atmosphere	No excessive water vapor, oil vapor, dust, salt or corrosive substances. No sudden change in temperature. Non-condensing

3 Installation and connection

■ Installation Precautions

• Avoid direct sunlight:

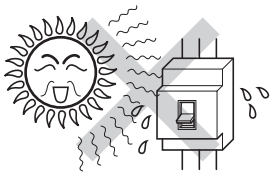

Install the breakers in an area that is not exposed to direct sunlight.
Otherwise, the breakers may malfunction due to a temperature rise.

• Avoid vibration and shock:

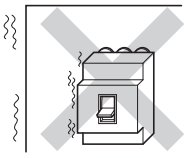

If installing the breakers in an area that is exposed to vibration or shock, use cushions to relieve vibration or shock applied to the breakers.

• Avoid dust and chippings:

Take measures so that the breakers are not directly exposed to rainwater, oil, dust or chippings. Pay special attention to electrically conducive particles such as iron chippings that can enter the breakers. House the breakers in enclosures during use.

• Do not block the arc gas exhaust ports:

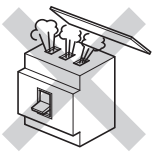

Do not block the arc gas exhaust ports. Doing so may deteriorate the breaking capacity. Ensure due insulation distance (arc space) between current carrying parts and grounded metal members in the vicinity of the exhaust ports. See page 5-20 for instructions regarding insulation distance.

• Do not remove the back cover:

Do not remove the base back cover or thread locking compound.

■ Connection Precautions

• Tighten to a proper torque:

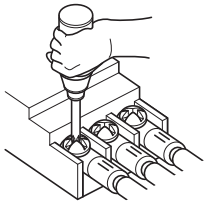

Undertightening terminal screws may result in overheat or malfunction and overtightening in damage to the mold. Tighten the screws to the specified torques. See pages 5-16 to 5-19 for proper tightening torques. Use screwdrivers suited to the size and type of screws.

• Never lubricate threads:

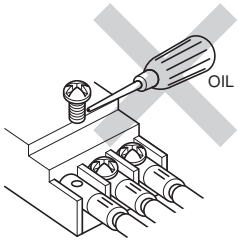

Do not lubricate screw threads. Doing so will decrease the frictional resistance, resulting in looseness and overheat.

• Insulate exposed live parts:

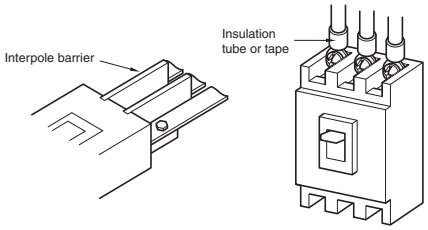

Electrically and positively insulate bare live parts of front-connected breakers using interpole barriers, terminal covers, insulation tube and/or insulation tape.

• Do not deform studs:

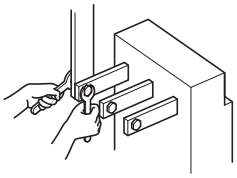

Tighten the conductor connections of rear-connected or plug-in breakers so that the studs do not suffer deformation due to excessive force.

• Normal connection of power supply and load is preferable:

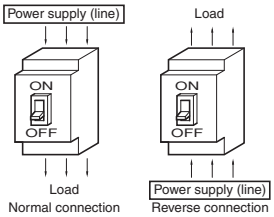

It is preferable in principle that the breaker is in normal connection. If reverse connection is necessary, refer to page 5-22.

• Firmly secure pole conductors in parallel with each other:

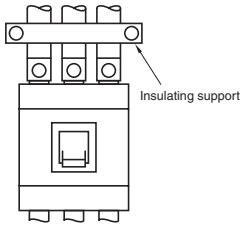

Install connecting conductors so that they are in parallel with each other. Firmly secure or tie the conductors by insulating support in case they are acted upon by an electromagnetic force, the strength of which depends on the magnitude of fault current. See the table to the right.

Electromagnetic force acted per meter of conductor

Conventional rated current kA (Power factor)	Electromagnetic force (three-phase short-circuit) N	
	Conductor clearance: 10 cm	Conductor clearance: 20 cm
10 (0.4)	490	245
18 (0.3)	1880	940
25 (0.2)	4430	2215
35 (0.2)	8690	4345
42 (0.2)	12520	6260
50 (0.2)	17740	8870
65 (0.2)	29980	14990
85 (0.2)	51270	25635
100 (0.2)	70960	35480
125 (0.2)	110870	55435

1. Initial inspection

After installing the breakers, inspect them according to the table shown below before energizing them for the first time. Make sure that the breakers are not energized before starting the inspection.

Check item	Criterion
1. Packing material debris, iron chippings, electrical wire debris or other electrically conductive foreign matter	Must have been completely removed.
2. Cracks of or damage to the cover and base	Must not have occurred.
3. Terminal screws and conductor clamping screws	Must have been tightened to the torques specified on pages 5-16 to 5-19.
4. Insulation resistance	Must be 5 megohms or higher when measured with a 500V megger.
5. Rated voltage and circuit voltage	Must be identical or within the permitted range.

■ Caution on dielectric withstand test voltage

Perform the dielectric withstand test according to the table shown below. Make sure that the test voltage does not exceed the upper limits specified in the table.

(Units in voltage)

Main circuit	Auxiliary or control circuit (Note 1)		
Rated insulation voltage	Test voltage (ac rms)	Rated insulation voltage of operating circuit	Test voltage (ac rms)
Ui≦300	2000	Uis≦60	1000 (Note 2)
300＜Ui≦690	2500	60＜Uis≦600	2 Uis+1000 (1500 min)

Notes: 1. Between terminal group and ground only
2. Isolate DC 24 V motors from the control circuit. Dielectric withstand voltage: AC 500 V or AC 1000V.

2. Periodic Inspection

Periodic inspection is needed to maintain the optimum performance of the breakers and prevent malfunctions. Perform the first inspection one month after the system is put into commission and subsequently, at periodic intervals depending on the operating conditions.

■ Guidelines for inspection intervals

Operating conditions		Installation location	Examples	Guidelines for inspection intervals
Typical	1	Where the ambient air is always clean and dry.	Dustproof and air-conditioned electrical installation rooms	Every 2 or 3 years before 10 years since installation Every year after 10 years since installation Every 6 months after 15 years since installation
	2	Indoors where dust is low and corrosive gases are not present.	Switchboards or enclosures in electrical installation rooms not dustproof nor air-conditioned	Every year before 10 years since installation Every 6 months after 10 years since installation Every month after 15 years since installation
Harsh	1	Where sulfur dioxide, hydrogen sulfide, chloride and/or high-humidity gases are present and dust is low.	Geothermal power plants sewage treatment plants, steelmaking plants, papermaking plants or pulp making plants	Every 6 months before 5 years since installation Every month after 5 years since installation
	2	Where dust and/or corrosive gases are severe, making it impossible for people to stay in for a long time.	Chemical plants, quarries or mines.	Every month

■ Check items

Make sure that the breakers are not energized before starting the inspection.

Check item	Criterion	Remedy
1. Terminal screws	Must not be loosened.	If loosened, retighten to the torque specified on pages 5-16 to 5-19.
2. Terminals and their vicinities	Must be free of dust and oil.	If not, clean with a cleaner. Wipe with a clean cloth.
3. Cracks of or damage to the cover and base	Must not have occurred.	If cracks or damage is found, replace.
4. Operating mechanism	Must work smoothly.	If not, replace or contact us.
5. Discoloration or overheat signs of terminals and/or base	Must not be present by visual inspection.	If present, replace. (Discoloration of silver coating to a certain degree proves no problem).
6. Insulation resistance	Must be 5 megohms or higher when measured with a 500V megger.	If not, replace.

3. Inspection and action after interruption of fault current

When a breaker trips to interrupt a fault current, check the breaker to determine if it can be reused or must be replaced.

1. If arc gas exhaust ports are kept clean and no anomaly is found, the breaker can be reused.
2. If arc gas exhaust ports are blackened by soot, the breaker may be reused provided that the insulation resistance is 5 MΩ or higher, live parts including terminals are not overheated during energization and no other anomaly is found. If the insulation resistance is lower than 5 megohms, perform the dielectric withstand test of the breaker. If the test shows that the breaker still has the specified dielectric strength, the breaker may be reused provided that live parts including terminals are not overheated. It is strongly recommended, however, that the breaker be reused for a limited duration of time and be replaced with new one as early as possible.
   • The dielectric withstand test is to be done according to the description on page 8-4.
3. If the handle and arc gas exhaust ports are heavily blackened by soot and molten metal grains are found around the ports, replace the breaker with new one.

4. Operation durability

The operation durability of breakers depends on their frame size. Larger the frame size is, the lower the operation durability is. IEC 60947-2 specifies the operation durability of breakers as shown in the table blow. Breakers are a protection tool and unlike electromagnetic relays, are originally inappropriate for frequent switching operation.

Admissible number of operation cycles of molded case circuit breakers

1	2	3	4	5
Rated current, A (Note 1)	Number of operation cycles per hour (Note 2)	Number of operation cycles		
		Not energized	Energized (Note 3)	Total
$I_n \leqq 100$	120	8500	1500	10000
$100 < I_n \leqq 315$	120	7000	1000	8000
$315 < I_n \leqq 630$	60	4000	1000	5000
$630 < I_n \leqq 2500$	20	2500	500	3000
$2500 < I_n$	10	1500	500	2000

Notes: 1. Max value applicable to respective frame size
2. Min value. This may be increased by agreement. If the value is increased, the test report must state so specifically.
3. The breakers must be kept closed at each operation cycle for a duration of time sufficient for the current to be established. The duration, however, does not need to be longer than two seconds.

5. Troubleshooting guide

Take an appropriate action according to the following table when a trouble occurs:

■ Troubles in breakers

Category	Symptom	Possible cause	Remedy/Action
Overheat	○Overheat of terminals ○Burnout of terminal insulation	○Looseness of terminal screws or conductor clamping screws	○Retighten.
		○Increase in contact resistance of contactors ○Contact failure between stud conductor and terminal (due to looseness of screws or foreign matter)	○Replace.
	○Overheat (exceeding 70°C) of breaker molded case	○Increase in contact resistance of contactors ○Looseness of interior parts ○Increase in current density due to disconnection of braided wire	○Replace.
		○High-frequency distortion of load current	○Improve distortion factor.
Continuity failure	○Abnormal voltage on load side	○Excessive wear of contactors ○Foreign matter between contactors ○Damage to current carrying parts (due to excessively frequent switching or corrosive gases) ○Oxidation membrane on contact surface. (oxide film)	○Replace if breaker condition is not recovered after 10 times operation.
Inoperativeness	○Closing not allowed	○Breaker is kept in tripped state, i.e., is not reset.	○Reset.
	○Resetting not allowed	○UVT is not excited.	○Energize.
		○Bimetal is not enough cooled after tripping due to overcurrent.	○Cool down before resetting.
		○Bimetal is deformed e.g. by corrosion. ○Admissible number of operation cycles is exceeded and service life has expired. (SHT or UVT was frequently used for tripping). ○Mechanical failure	○Replace.
Nuisance tripping	○Tripping occurring while rated current is still not reached	○Ambient temperature too high (exceeding 40°C)	○Reduce ambient temperature e.g. through ventilation.
		○Overheat due to looseness of terminal screws	○Retighten.
		○Overheat of interior parts	○Replace.
		○Vibration and/or shock	○Use cushions or the like to dampen vibration and shock.
		○Incompatible frequency (for thermal-magnetic breakers with CT)	○Replace to match frequency.
		○High-frequency distortion of load current	○Reduce load current or change current rating.
		○Conductor size smaller than specified	○Use larger size conductors or change current rating.
		○Electromagnetic-induced noise (for electronic breakers)	○Isolate noise source.
		○Excessive surge (for electronic breakers)	○Isolate surge source.
	○Tripping due to starting current	○Inrush starting current ○Switching operation of star-delta starter ○Start of inching (resulting in instantaneous tripping)	○Change instantaneous trip pickup current or replace with breaker having larger current rating.
		○Starting current too high (resulting in long-delayed tripping) ○Starting time too long (resulting in long-delayed tripping)	○Replace with breaker having larger current rating.
		○Short-circuit in motor	○Repair or replace motor.
		○Erroneous connection of control circuit for SHT or UVT	○Check connection.
No response to overcurrent	○No tripping at trip pickup current	○Failure in coordination with an upstream current-limiting fuse or breaker	○Review coordination.
		○Ambient temperature too low	○Check compensation current.
		○Incompatible frequency	○Match frequency.

■ Troubles in accessories

Category	Symptom	Possible cause	Remedy/Action
Failure of accessories	○Failure of motor operator	○Wiring mistakes in control circuit ○Continuous on/off operations due to wiring mistakes in control circuit	○Check and correct wiring.
		○Voltage drop due to insufficient capacity of power supply cable	○Use larger size cable.
		○Insufficient power supply capacity of control circuit	○Increase power supply capacity.
		○Closing/opening/resetting not allowed due to improper stroke adjustment of operation mechanism	○Return to Terasaki for stroke readjustment.
	○Failure of SHT	○Supply-voltage drop due to insufficient current carrying capacity of control circuit	○Increase current carrying capacity.
		○Supply-voltage drop due to insufficient current carrying capacity	○Increase power supply capacity.
		○Coil burnout due to continuous excitations, improper coil ratings, failure or fusion of anti-burnout contacts, etc.	○Return to Terasaki or replace.
	○Failure of UVT	○Remanence ○Improper stroke adjustment	○Repair or replace.
	○Failure of auxiliary and/or alarm switches	○Fusion or burnout of microswitch contacts due to their improper ratings	○Return to Terasaki or replace. Load to microswitch contacts will be relieved e.g through auxiliary relays.
		○Improper adjustment of microswitches	○Return to Terasaki for repair.

9 Appendix

1 Handle operation and dimensions

Molded Case Circuit Breakers

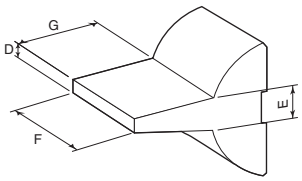

Fig. 1

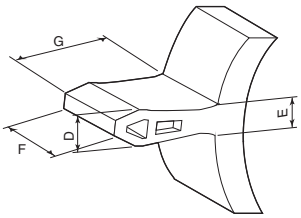

Fig. 2

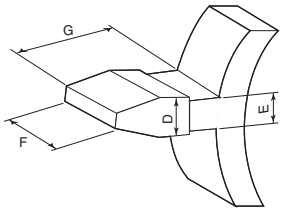

Fig. 3

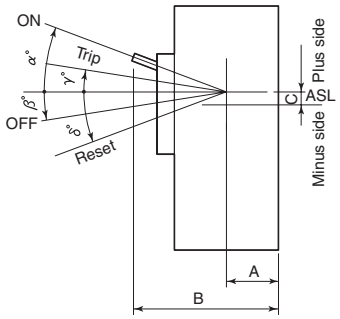

Frame (A)	Breaker	Ref. figure	Operation angle ON α°	OFF β°	Trip γ°	Reset δ°	Dimensions A	B	C	D	E	F	G	Operation effort N OFF↓ON	ON↓OFF	Trip↓Reset	Radius of rotation (mm)
50	**E50-SF,E50-CM**	1	17	7	6.5	12	32.8	87	+3	6	7	10	15.5	19.6	9.8	39.2	54.2
	S50-SF	2	12.7	10.4	2	13.2	40.6	95	-2	7.4	7.8	13	22.8	44.1	37.2	78.4	54.5
	S50-GF	2	19.2	16.5	4.1	19	26	92	0	6.8	9.3	13	20.4	22.0	28.0	68.0	66.0
100	**E100-SF**	1	17	7	6.5	12	32.8	87	+3	6	7	10	15.5	19.6	9.8	39.2	54.2
	S100-NF,S100-GF S100-NM,S100-NN	2	19.2	16.5	4.1	19	26	92	0	6.8	9.3	13	20.4	22.0	28.0	68.0	66.0
	H100-NF,L100-NF	2	19.2	16.5	4.1	19	61	127	0	6.8	9.3	13	20.4	25.0	36.0	76.0	66.0
125	**S125-SF,S125-SN**	2	12.7	10.4	2	13.2	40.6	95	-2	7.4	7.8	13	22.8	44.1	37.2	78.4	54.5
	S125-NF,S125-GF,S125-NN	2	19.2	16.5	4.1	19	26	92	0	6.8	9.3	13	20.4	22.0	28.0	68.0	66.0
	H125-NF,L125-NF	2	19.2	16.5	4.1	19	61	127	0	6.8	9.3	13	20.4	25.0	36.0	76.0	66.0
225 250	**S225-NF,S225-GF,S225-NM**	2	19.2	16.5	4.1	19	26	92	0	6.8	9.3	13	20.4	25.0	36.0	76.0	66.0
	S225-GE,H225-NF,L225-NF	2	19.2	16.5	4.1	19	61	127	0	6.8	9.3	13	20.4	25.0	36.0	76.0	66.0
	E250-SF,S250-SF,S250-SN	2	11.8	13.2	3.8	16.2	40.5	95	0	7.4	7.2	13	21.1	53.0	57.0	91.0	54.4
	S250-NF,S250-GF	2	19.2	16.5	4.1	19	26	92	0	6.8	9.3	13	20.4	25.0	36.0	76.0	66.0
400	**S400-CF,S400-NF S400-NE,S400-NN S400-GF,S400-GE S400-PF,S400-PE**	3	19.8	19.3	-3.5	22.5	53.6	145	+2.8	14	9	34	39.5	110	115	125	91.4
	H400-NE,L400-NE	3	19.8	19.3	-3.5	22.5	90.6	182	+2.8	14	9	34	39.5	110	115	125	91.4
630	**S630-CF,S630-NF,S630-RF S630-PF,S630-NE,S630-RE S630-PE,S630-GN**	3	20	18	2	22	53.7	145	+5	13	11	40	39.5	140	140	170	91.3
	H630-NE,L630-NE	3	20	18	2	22	90.7	145	+5	13	11	40	39.5	140	140	170	91.3
800	**S800-CF,S800-NF,S800-RF S800-PF,S800-NE,S800-RE S800-PE,S800-GN**	3	20	18	2	22	53.7	145	+5	13	11	40	39.5	140	140	170	91.3
	H800-NE,L800-NE	3	20	18	2	22	90.7	145	+5	13	11	40	39.5	140	140	170	91.3
1000	**TL-1000NE**	1	22	4	3	9	93.5	191	-2.8	11	12.5	40	30	157	118	343	98.3
1200	**TL-1200NE**	1	22	4	3	9	93.5	191	-2.8	11	12.5	40	30	157	118	343	98.3
1250	**S1250-NE,S1250-GE,S1250-NN**	2	22	4	12	9	73.5	171	-2.8	11	12.5	40	30	157	294	343	98.3
1600	**S1600-NE,S1600-NN**	2	22	4	12	9	93.5	191	-2.8	11	12.5	40	30	157	294	343	98.3
2000	**XS2000NE,XS2000NN**	1	18.3	10	7.7	15.3	100	245	+2	20.5	24	60	42.5	382	322	559	146

Unit Operation effort : N
1N≒1/9.8kgf

注①：機種により℄中心線適用となります。7章の外形図をご参照ください。

2 Mounting positions for trip button

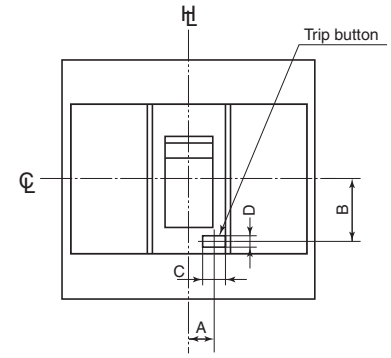

Fig. 1

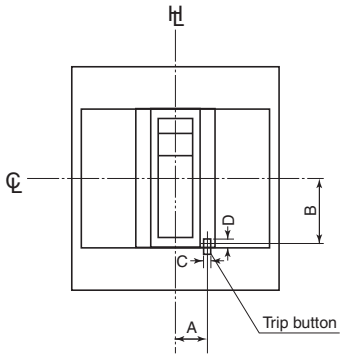

Fig. 2

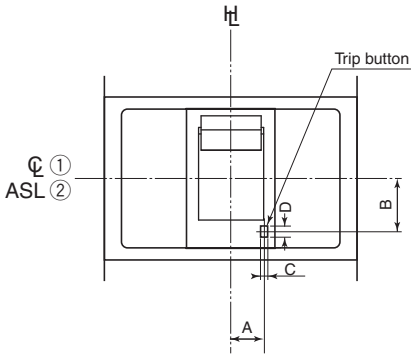

Fig. 3

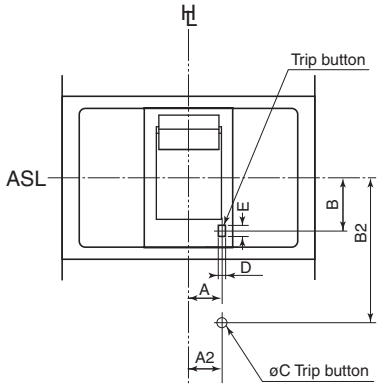

Fig. 4

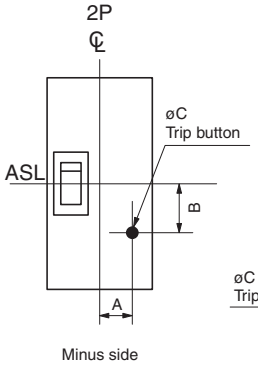

Fig. 5

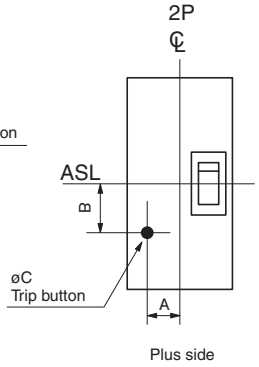

Fig. 6

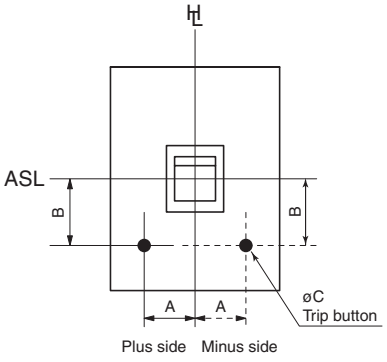

Fig. 7

: Handle Frame Centre Line : Handle Centre Line ASL : Arrangement Standard Line

Frame	Breaker	Ref. figure	Trip button A	B	C	D
50	**S50-SF**	1	7.6	18.8	6.9	3.4
	S50-GF	2	13.8	20.4	3.3	4.3
100	**S100-NF,S100-GF S100-NM,S100-NN**	2	13.8	20.4	3.3	4.3
	H100-NF,L100-NF	2	17.2	20.4	3.3	4.3
125	**S125-SF,S125-SN**	1	7.6	18.8	6.9	3.4
	S125-NF,S125-GF,S125-NN	2	13.8	20.4	3.3	4.3
	H125-NF,L125-NF	2	17.2	20.4	3.3	4.3
225 250	**S225-NF,S225-GF,S225-NM**	2	17.2	20.4	3.3	4.3
	H225-NF,L225-NF,S225-GE	2	17.2	20.4	3.3	4.3
	E250-SF,S250-SF,S250-SN	1	10.9	18.6	6.4	4.8
	S250-NF,S250-GF	2	17.2	20.4	3.3	4.3
400	**S400-CF,S400-NF S400-NE,S400-NN S400-GF,S400-GE S400-PF,S400-PE**	3①	21.6	37.2	5.3	6.6
	H400-NE,L400-NE	3①	21.6	37.2	5.3	6.6
630	**S630-CF,S630-NF,S630-RF S630-PF,S630-NE,S630-RE S630-PE,S630-GN**	3②	21.8	33	5.3	6.6
	H630-NE,L630-NE	3②	21.8	33	5.3	6.6
800	**S800-CF,S800-NF,S800-RF S800-PF,S800-NE,S800-RE S800-PE,S800-GN**	3②	21.8	33	5.3	6.6
	H800-NE,L800-NE	3②	21.8	33	5.3	6.6

Frame	Breaker	Ref. figure	Trip button A	B	A2	B2	C	D	E
1250③	**S1250-NE,S1250-GE,S1250-NN**	4	30	37.5	31	70.5	6	6	8
1600③	**S1600-NE,S1600-NN**	4	30	37.5	31	70.5	6	6	8

Frame	Breaker		Ref. figure	Trip button A	B	C
50	**E50-SF,E50-CM**	2P	5	-19	28	6
		3P	7	-31.5	28	6
100	**E100-SF**	2P	6	+20	28	6
		3P	7	-31.5	28	6
1000	**TL-1000NE**		7	0	72.5	6
1200	**TL-1200NE**		7	0	72.5	6
2000	**XS2000NE,XS2000NN**		7	+39	126	6

Notes: 1. 400AF apply ℄ Handle Centre Line.
2. 630AF and 800AF apply ASL Arrangement Standard Line.
3. 2 trip buttons are equipped.

3 Standard arrangement for plug-in type auxiliary circuit terminals (PMB)

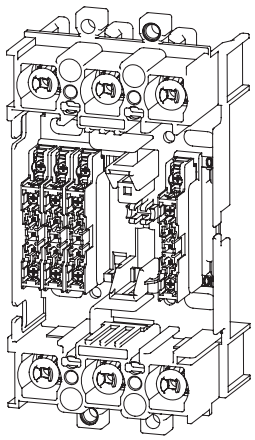

Auxiliary circuit terminals are of self-engaging type.
Shown in the table below are standard terminal arrangements as seen from the front of the plug-in base for high-performance type.
Contact us for non-standard arrangements.

Terminal screw: M3.5
Suitable wire size: 0.5～0.75 mm²

Breaker	S100-NF S100-GF S125-NF S125-GF	S50-GF S100-NF,S100-GF,S100-NN S125-NF,S125-GF	H100-NF,L100-NF H125-NF,L125-NF S225-NF,S225-GF,H225-NF L225-NF,S225-GE S250-NF,S250-GF	S400-CF,S400-NF,S400-NE S400-GF,S400-GE,S400-NN S400-PF,S400-PE,H400-NE,L400-NE S630-CF,S630-NF,S630-RF,S630-PF S630-NE,S630-RE,S630-PE,S630-GN S800-CF,S800-NF,S800-RF,S800-PF S800-NE,S800-RE,S800-PE,S800-NN H630-NE,L630NE,H800-NE,L800NE
	2P	3P, 4P	3P, 4P	3P, 4P
Number of auxiliary circuit terminals (Max allowable)				
Arrangement 1	C1 C2	AXa1 AXa2 ALa1 C1 AXb1 AXb2 ALb1 AXc1 AXc2 ALc1 C2	AXa1 AXa2 ALa1 C1 AXb1 AXb2 ALb1 AXc1 AXc2 ALc1 C2	AXa1 AXa2 AXa3 ALa1 C1 AXb1 AXb2 AXb3 ALb1 AXc1 AXc2 AXc3 ALc1 C2
Arrangement 2	D1 D2	AXa1 AXa2 ALa1 D1 AXb1 AXb2 ALb1 AXc1 AXc2 ALc1 D2	AXa1 AXa2 ALa1 D1 AXb1 AXb2 ALb1 AXc1 AXc2 ALc1 D2	AXa1 AXa2 AXa3 ALa1 D1 AXb1 AXb2 AXb3 ALb1 AXc1 AXc2 AXc3 ALc1 D2
Arrangement 3	AXa1 AXa2 AXb1 AXb2 AXc1 AXc2			
Arrangement 4	AXa1 ALa1 AXb1 ALb1 AXc1 ALc1			

4 Standard arrangement for plug-in type auxiliary circuit terminals (PMC)

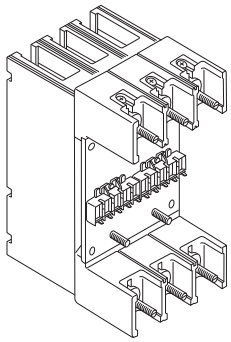

Five auxiliary circuit terminals (self-engaging) constitute a terminal block.
Shown in the table below are standard terminal arrangements as seen from the rear of the plug-in base for standard type.
Contact us for non-standard arrangements.

Breaker	S50-SF,S125-SF	S50-SF,S125-SF S125-SN	E250-SF,S250-SF S250-SN
	2P	3P	3P
Number of auxiliary circuit terminals (Max allowable)			
Arrangement 1	C1 C2	AXc1 AXa1 AXb1 C1 C2 ALc1 ALa1 ALb1 C1 C2	AXc1 AXa1 AXb1 C1 C2 ALc1 ALa1 ALb1 C1 C2
Arrangement 2	D1 D2	AXc1 AXa1 AXb1 D1 D2 ALc1 ALa1 ALb1 D1 D2	AXc1 AXa1 AXb1 D1 D2 ALc1 ALa1 ALb1 D1 D2
Arrangement 3	AXc1 AXa1 AXb1 ALc1 ALa1 ALb1	AXc1 AXa1 AXb1 ALc1 ALa1	AXc1 AXa1 AXb1 ALc1 ALa1
Arrangement 4			

4 Standard arrangement for plug-in type auxiliary circuit terminals (PMC)

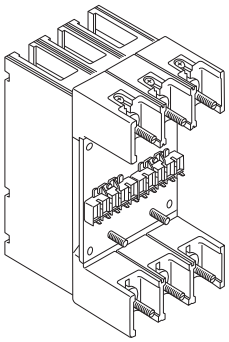

Five auxiliary circuit terminals (self-engaging) constitute a terminal block.
Shown in the table below are standard terminal arrangements as seen from the rear of the plug-in base for standard type.
Contact us for non-standard arrangements.

✻ If the number of auxiliary circuit terminals (self-engaging) is insufficient for E50-SF, E50-CM and E100-SF lead wires are to be used along with the auxiliary circuit terminals. Please state the accessories for which lead wires are used, when ordering.

Breaker	E50-SF E100-SF	E50-SF E50-CM E100-SF	S50-GF, S100-NF S100-GF, S100-NN H100-NF, L100-NF S125-NF, S125-GF S125-NN, H125-NF L125-NF, S225-NF S225-GF, H225-NF L225-NF, S225-GE S250-NF, S250-GF	S400-CF,S400-NF,S400-GF,S400-NN S400-NE, S400-GE,S400-PF,S400-PE H400-NE,L400-NE	
	2P	3P	3P	3P	
Number of auxiliary circuit terminals (Max allowable)					
Arrangement 1	AXc1 AXa1 AXb1	AXc1 AXa1 AXb1 U1 U2	AXc1 AXa1 AXb1 C1 C2	AXc1 AXa1 AXb1 AXc2 AXa2 AXb2 C1 C2	
	ALc1 ALa1 ALb1	ALc1 ALa1 ALb1 U1 U2	ALc1 ALa1 ALb1 C1 C2	AXc1 AXa1 AXb1 ALc1 ALa1 ALb1 C1 C2	
Arrangement 2	U1 U2	AXc1 AXa1 AXb1 P1 P2 ✻2	AXc1 AXa1 AXb1 D1 D2	AXc1 AXa1 AXb1 AXc2 AXa2 AXb2 D1 D2	
	P1 P2	ALc1 AXa1 AXb1 P1 P2 ✻2	ALc1 ALa1 ALb1 D1 D2	AXc1 AXa1 AXb1 ALc1 ALa1 ALb1 D1 D2	
Arrangement 3	S1 S2	AXc1 AXa1 AXb1 S1 S2	AXc1 AXa1 AXb1 ALc1 ALa1	AXc1 AXa1 AXb1 PALc PALa OP1 OP2 C1 C2	
		ALc1 ALa1 ALb1 S1 S2		AXc1 AXa1 AXb1 PALc PALa OP1 OP2 D1 D2	

	S630-CF,S630-NF,S630-RF,S630-PF S630-NE,S630-RE,S630-PE,S630-GN S800-CF,S800-NF,S800-RF,S800-PF S800-NE,S800-RE,S800-PE,S800-NN H630-NE, L630-NE,H800-NE,L800-NE S1250-NE,S1250-GE,S1250-NN	TL-1000NE,TL-1200NE
	3P	3P, 4P
	AXc1 AXa1 AXb1 ALc1 ALa1 AXc2 AXa2 AXb2 PALc PALa ALb1 OP1 OP2 D1 D2 (OP1–OP2: ＊1)	AXc1 AXa1 AXb1 ALc1 ALa1 AXc2 AXa2 AXb2 PALc PALa ALb1 OP1 OP2 U1 U2 (OP1–OP2: ＊1)
	AXc1 AXa1 AXb1 ALc1 ALa1 AXc2 AXa2 AXb2 PALc PALa ALb1 OP1 OP2 C1 C2 (OP1–OP2: ＊1)	AXc1 AXa1 AXb1 ALc1 ALa1 AXc2 AXa2 AXb2 PALc PALa ALb1 OP1 OP2 P1 P2 (OP1–OP2: ＊1, P1–P2: ＊2)
		AXc1 AXa1 AXb1 ALc1 ALa1 AXc2 AXa2 AXb2 PALc PALa ALb1 OP1 OP2 S1 S2 (OP1–OP2: ＊1, S1–S2: ＊2)

＊1：If the OCR controller is installed separately, substitute OS1 and OS2 for OP1 and OP2 and connect these terminals to the controller terminals having the same numbers.
＊2：If the UVT controller is installed separately, substitute UC1 and UC2 for P1 and P2 and connect these terminals to the controller terminals having the same numbers.

5 Internal resistance and power consumptions of breakers

Molded Case Circuit Breakers

Frame (A)	Breaker	Rated current (A)	Internal resistance, mΩ (Note 1) • Per pole		Power consumption, W (Note 2) • Per pole	
			Front-connected	Plug-in	Front-connected	Plug-in
50	**E50-SF**	10	15.9	16.2	1.6	1.6
		15	5.7	6	1.3	1.4
		20	4.7	5	1.9	2
		30	3.5	3.8	3.2	3.4
		40	2	2.3	3.2	3.7
		50	1.6	1.9	4	4.8
	S50-SF	15	8.63	8.75	1.94	1.97
		20	8.63	8.75	3.45	3.5
		30	3.18	3.3	2.86	2.97
		40	2.72	2.84	4.35	4.54
		50	2.69	2.81	6.73	7.03
	S50-GF	15	15	15.3	3.38	3.44
		20	15	15.3	6.0	6.12
		30	8	8.27	7.2	7.44
		40	1.8	2.07	2.88	3.31
		50	1.8	2.07	4.5	5.18
	TB-5S	10	6.56	—	0.656	—
		15	5.05	—	1.14	—
		20	4.16	—	1.66	—
		30	2.44	—	2.2	—
		40	1.73	—	2.77	—
		50	1.5	—	3.75	—
	TB-5P Plug-in for Line Front connection for Load	10	6.76		0.676	
		15	5.25		1.18	
		20	4.36		1.74	
		30	2.64		2.38	
		40	1.93		3.09	
		50	1.70		4.25	
	TB-5D	10	—	6.96	—	0.696
		15	—	5.45	—	1.23
		20	—	4.56	—	1.82
		30	—	2.84	—	2.56
		40	—	2.13	—	3.41
		50	—	1.90	—	4.75
100	**E100-SF**	10	15.9	16.2	1.6	1.6
		15	5.7	6	1.3	1.4
		20	4.7	5	1.9	2
		30	3.5	3.8	3.2	3.4
		40	2	2.3	3.2	3.7
		50	1.6	1.9	4	4.8
		60	1.2	1.5	4.3	5.4
		75	1.1	1.4	6.2	7.9
		100	1	1.3	10	13
	S100-NF,S100-GF	15	15	15.3	3.38	3.44
		20	15	15.3	6	6.12
		30	8.0	8.27	7.2	7.44
		40	1.8	2.07	2.88	3.31
		50	1.8	2.07	4.5	5.18
		60	1.3	1.57	4.68	5.65
		75	0.8	1.07	4.5	6.02
		100	0.8	1.07	8	10.7
	H100-NF,L100-NF	15	23.5	23.6	5.29	5.31
		20	23.5	23.6	9.4	9.44
		30	11.9	12	10.7	10.8
		40	1.99	2.13	3.18	3.41
		50	1.99	2.13	4.98	5.33
		60	1.62	1.76	5.83	6.34
		75	0.97	1.11	9.7	6.24
		100	0.97	1.11	9.7	11.1
	S100-NM	16	15	—	3.84	—
		24	8	—	4.61	—
		32	1.8	—	1.84	—
		40	1.8	—	2.88	—
		45	1.8	—	3.65	—
		60	1.3	—	4.68	—
		75	0.8	—	4.5	—
		90	0.8	—	6.48	—
		100	0.8	—	8	—
125	**S125-SF**	15	8.63	8.75	1.94	1.97
		20	8.63	8.75	3.45	3.5
		30	3.18	3.3	2.86	2.97
		40	2.72	2.84	4.35	4.54
		50	2.69	2.81	6.73	7.03
		60	2.14	2.26	7.70	8.14
		75	1.42	1.54	7.99	8.66
		100	0.93	1.05	9.3	10.5
		125	0.84	0.96	13.13	15
	S125-NF,S125-GF	125	0.8	1.07	12.5	16.7
	H125-NF,L125-NF	125	0.97	1.11	15.2	17.3
225	**S225-NF,S225-GF**	125	0.47	0.61	7.34	9.53
		150	0.47	0.61	10.58	13.73
		175	0.26	0.4	7.96	12.25
		200	0.26	0.4	10.4	16
		225	0.26	0.4	13.16	20.25
	S225-GE	125	0.35	0.49	5.47	7.66
		150	0.35	0.49	7.88	11
		175	0.35	0.49	10.7	15
		200	0.35	0.49	14	19.6
		225	0.35	0.49	17.7	24.8
	H225-NF,L225-NF	125	0.57	0.71	8.91	11.09
		150	0.57	0.71	12.83	15.98
		175	0.36	0.5	11.03	15.31
		200	0.36	0.5	14.4	20
		225	0.36	0.5	18.23	25.31
	S225-NM	125	0.47	—	7.34	—
		150	0.47	—	10.58	—
		175	0.26	—	7.96	—
		225	0.26	—	13.16	—

Frame (A)	Breaker	Rated current (A)	Internal resistance, mΩ (Note 1) • Per pole		Power consumption, W (Note 2) • Per pole	
			Front-connected	Plug-in	Front-connected	Plug-in
250	**E250-SF,S250-SF**	125	0.45	0.59	7.03	9.22
		150	0.45	0.59	10.13	13.28
		175	0.35	0.49	10.72	15.01
		200	0.35	0.49	14.00	19.60
		225	0.26	0.4	13.16	20.25
		250	0.26	0.4	16.25	25.00
	S250-NF,S250-GF	250	0.26	0.4	16.3	25
400	**S400-CF,S400-NF S400-GF**	125	0.49	0.54	7.66	8.44
		150	0.49	0.54	11.03	12.15
		175	0.24	0.29	7.35	8.88
		200	0.24	0.29	9.6	11.6
		225	0.24	0.29	12.15	14.68
		250	0.24	0.29	15	18.13
		300	0.14	0.19	12.6	17.1
		350	0.14	0.19	17.15	23.28
		400	0.14	0.19	22.4	30.4
	S400-PF	250	0.24	0.29	15	18.13
		300	0.14	0.19	12.6	17.1
		350	0.14	0.19	17.15	23.28
		400	0.14	0.19	22.4	30.4
	S400-NE,S400-GE S400-PE	125	0.13	0.18	2.03	2.8
		150	0.13	0.18	2.93	4.1
		175	0.13	0.18	3.98	5.5
		200	0.13	0.18	5.2	7.2
		225	0.13	0.18	6.58	9.1
		250	0.13	0.18	8.13	11.3
		300	0.13	0.18	11.7	16.2
		350	0.13	0.18	15.93	22.1
		400	0.13	0.18	20.8	28.8
	H400-NE,L400-NE	250	0.19	0.23	11.9	14.4
		300	0.19	0.23	17.1	20.7
		350	0.19	0.23	23.2	28.2
		400	0.19	0.23	30.4	36.8
630	**S630-CF,S630-NF,S630-RF S630-PF**	500	0.11	0.12	27.5	30
		600	0.11	0.12	39.6	43.2
		630	0.11	0.12	43.7	47.6
	S630-NE,S630-RE	250	0.08	0.09	5	5.63
		300	0.08	0.09	7.2	8.1
		350	0.08	0.09	9.8	11
		400	0.08	0.09	12.8	14.4
		500	0.08	0.09	20	22.5
		600	0.08	0.09	28.8	32.4
		630	0.08	0.09	31.8	35.7
	H630-NE,L630-NE,S630-PE	250	0.1	0.12	6.3	7.5
		300	0.1	0.12	9	10.8
		350	0.1	0.12	12.3	14.7
		400	0.1	0.12	16	19.2
		500	0.1	0.12	25	30.0
		600	0.1	0.12	36	43.2
		630	0.1	0.12	39.69	47.6
800	**S800-CF,S800-NF,S800-RF S800-PF**	700	0.09	0.11	44.1	53.9
		800	0.09	0.11	57.6	70.4
	S800-NE,S800-RE,S800-PE	350	0.08	0.1	9.8	12.3
		400	0.08	0.1	12.8	16
		450	0.08	0.1	16.2	20.3
		500	0.08	0.1	20	25
		600	0.08	0.1	28.8	36
		700	0.08	0.1	39.2	49
		800	0.08	0.1	51.2	64
	H800-NE,L800-NE	350	0.1	0.12	12.3	14.7
		400	0.1	0.12	16	19.2
		450	0.1	0.12	20.3	24.3
		500	0.1	0.12	25	30
		600	0.1	0.12	36	43.2
		700	0.1	0.12	49	58.8
		800	0.1	0.12	64	76.8
1000	**TL-1000NE**	500	0.045	0.06	11.3	15
		600	0.045	0.06	16.2	21.6
		700	0.045	0.06	22.1	29.4
		800	0.045	0.06	28.8	38.4
		900	0.045	0.06	36.5	48.6
		1000	0.045	0.06	45	60
1200	**TL-1200NE**	600	0.045	0.06	16.2	21.6
		700	0.045	0.06	22.1	29.4
		800	0.045	0.06	28.8	38.4
		1000	0.045	0.06	45	60
		1200	0.045	0.06	64.8	86.4
1250	**S1250-NE,S1250-GE**	500	0.04	0.053	10	13.3
		600	0.04	0.053	14.4	19.1
		700	0.04	0.053	19.6	26
		800	0.04	0.053	25.6	33.9
		1000	0.04	0.053	40	53
		1200	0.04	0.053	57.6	76.3
		1250	0.04	0.053	62.5	82.8
1600	**S1600-NE**	700	0.022	0.039 ③	10.8	19.1 ③
		800	0.022	0.039 ③	14.1	25 ③
		900	0.022	0.039 ③	17.8	31.6 ③
		1000	0.022	0.039 ③	22	39 ③
		1200	0.022	0.039 ③	31.7	56.2 ③
		1400	0.022	0.039 ③	43.1	76.4 ③
		1500	0.022	0.039 ③	49.5	87.8 ③
		1600	0.022	0.039 ③	56.3	99.8 ③
2000	**XS2000NE**	1000	0.017	0.022 ③	17	22 ③
		1200	0.017	0.022 ③	24.5	31.7 ③
		1400	0.017	0.022 ③	33.3	43.1 ③
		1600	0.017	0.022 ③	43.5	56.3 ③
		1800	0.017	0.022 ③	55.1	74.5 ③
		2000	0.017	0.022 ③	68	92 ③

Notes: 1. The resistance values shown above are for reference purpose only. 2. The power consumptions shown above are calculated on the basis of the dc internal resistance.
3. Applicable to draw-out type.

MEMO

TERASAKI ELECTRIC (EUROPE) LTD.
FILIAL SVERIGE
(Sweden)

TERASAKI ELECTRIC (EUROPE) LTD.
(United Kingdom)

TERASAKI ELECTRIC (EUROPE) LTD.
SUCURSAL EN ESPAÑA
(Spain)

TERASAKI ELECTRIC (EUROPE) LTD.
FILIALE ITALIA
(Italy)

TERASAKI Global Network

TERASAKI ELECTRIC CO., LTD.
(Head Quarters, Japan)

TERASAKI ELECTRIC
(M) SDN. BHD.
(Malaysia)

TERASAKI CIRCUIT
BREAKERS (S) PTE. LTD.

TERASAKI ELECTRIC CO.,
(FAR EAST) PTE. LTD.
(Singapore)

TERASAKI DO BRASIL LTDA.
(Brazil)

TERASAKI ELECTRIC
(SHANGHAI) CO., LTD.
(China)

TERASAKI ELECTRIC
(CHINA) LTD.
(China)

Since 1971 when we established TERASAKI ELECTRIC Europe, our first overseas subsidiary, in the UK, we have assembled a global network of 10 overseas subsidiaries and 72 agents to provide sales and technical supports to customers worldwide.

⚠ Safety Notice

Carefully read instruction manual to ensure proper installation, connection, operation, handling and maintenance of the product.

TERASAKI ELECTRIC CO., LTD.

Head Office: 6-13-47 Kamihigashi, Hirano-ku, Osaka 547-0002, Japan
Circuit Breaker Division: 6-13-47 Kamihigashi, Hirano-ku, Osaka 547-0002, Japan
TEL +81-6-6791-2763
FAX +81-6-6791-2732
int-sales@terasaki.co.jp
http://www.terasaki.co.jp/

JAN. 2017 Catalogue No. '17-I65E